WIRING DIAGRAMS

CONTENTS

	page		page
AIR CONDITIONING-HEATER	8W-42-1	OVERHEAD CONSOLE	8W-49-1
AIRBAG SYSTEM	8W-43-1	POWER DISTRIBUTION	8W-10-1
ANTI-LOCK BRAKES	8W-35-1	POWER DOOR LOCKS	8W-61-1
AUDIO SYSTEM	8W-47-1	POWER MIRRORS	8W-62-1
BODY CONTROL MODULE	8W-45-1	POWER SEAT	8W-63-1
CHARGING SYSTEM	8W-20-1	POWER WINDOWS	8W-60-1
COMPONENT INDEX	8W-02-1	REAR LIGHTING	8W-51-1
CONNECTOR/GROUND LOCATIONS	8W-90-1	SPLICE INFORMATION	8W-70-1
CONNECTOR PIN-OUTS	8W-80-1	SPLICE LOCATIONS	8W-95-1
FRONT LIGHTING	8W-50-1	STARTING SYSTEM	8W-21-1
FUEL/IGNITION SYSTEM	8W-30-1	TRAILER TOW	8W-54-1
GENERAL INFORMATION	8W-01-1	TRANSMISSION CONTROL SYSTEM	8W-31-1
GROUND DISTRIBUTION	8W-15-1	TURN SIGNALS	8W-52-1
HORN/CIGAR LIGHTER/POWER OUTLET	8W-41-1	VEHICLE SPEED CONTROL	8W-33-1
INSTRUMENT CLUSTER	8W-40-1	VEHICLE THEFT SECURITY SYSTEM	8W-39-1
INTERIOR LIGHTING	8W-44-1	WINDOW DEFOGGERS	8W-48-1
JUNCTION BLOCK	8W-12-1	WIPERS	8W-53-1
MESSAGE CENTER	8W-46-1		

8W-01 GENERAL INFORMATION

INDEX

page

DESCRIPTION AND OPERATION
- CIRCUIT FUNCTIONS 4
- CIRCUIT INFORMATION 4
- CONNECTOR INFORMATION 7
- ELECTROSTATIC DISCHARGE (ESD) SENSITIVE DEVICES 8
- INTRODUCTION 1
- NOTES, CAUTIONS, and WARNINGS 7
- POSITIVE TEMPERATURE COEFFICIENT 8
- SECTION IDENTIFICATION 5
- SPLICE LOCATIONS 7
- SYMBOLS 5
- TAKE OUTS 8
- TERMINOLOGY 7

DIAGNOSIS AND TESTING
- INTERMITTENT AND POOR CONNECTIONS 9

page

- TROUBLESHOOTING TESTS 9
- TROUBLESHOOTING TOOLS 8
- TROUBLESHOOTING WIRING PROBLEMS 10

SERVICE PROCEDURES
- CONNECTOR AND TERMINAL REPLACEMENT . 12
- CONNECTOR REPLACEMENT 11
- DIODE REPLACEMENT 14
- TERMINAL REPLACEMENT 13
- TERMINAL/CONNECTOR REPAIR- AUGAT CONNECTORS 12
- TERMINAL/CONNECTOR REPAIR-MOLEX CONNECTORS 11
- WIRING REPAIR 10

SPECIAL TOOLS
- WIRING/TERMINAL 14

DESCRIPTION AND OPERATION

INTRODUCTION

Chrysler wiring diagrams are designed to provide information regarding the vehicles wiring content. In order to effectively use Chrysler wiring diagrams to diagnose and repair a Chrysler vehicle, it is important to understand all of their features and characteristics.

Diagrams are arranged such that the power (B+) side of the circuit is placed near the top of the page, and the ground (B-) side of the circuit is placed near the bottom of the page.

All switches, components, and modules are shown in the at rest position with the doors closed and the key removed from the ignition.

Components are shown two ways. A solid line around a component indicates that the component is complete. A dashed line around a component indicates that the component being shown is not complete. Incomplete components have a reference number to indicate the page where the component is shown complete.

It is important to realize that no attempt is made on the diagrams to represent components and wiring as they appear on the vehicle. For example, a short piece of wire is treated the same as a long one. In addition, switches and other components are shown as simply as possible, with regard to function only.

DESCRIPTION AND OPERATION (Continued)

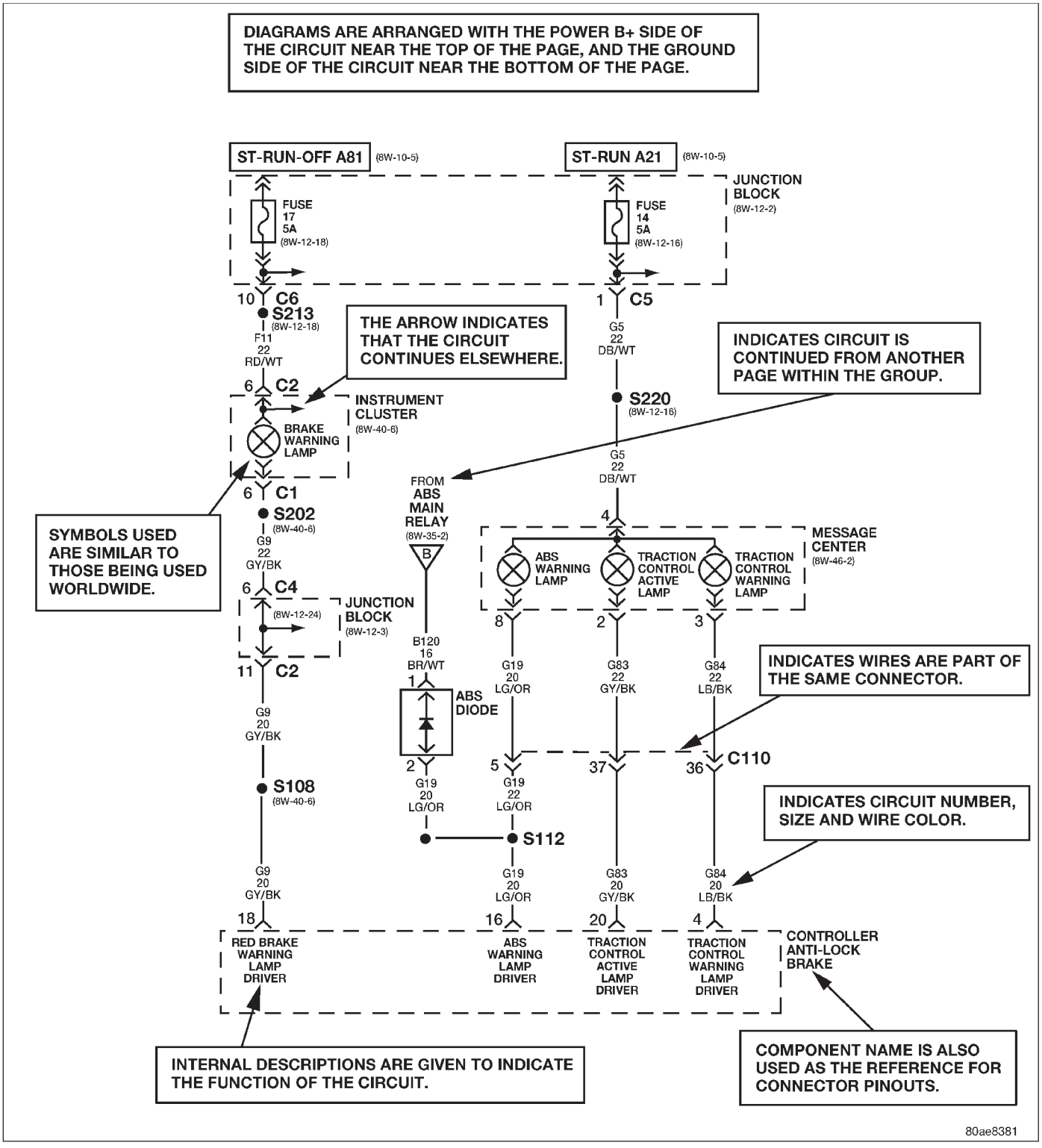

DESCRIPTION AND OPERATION (Continued)

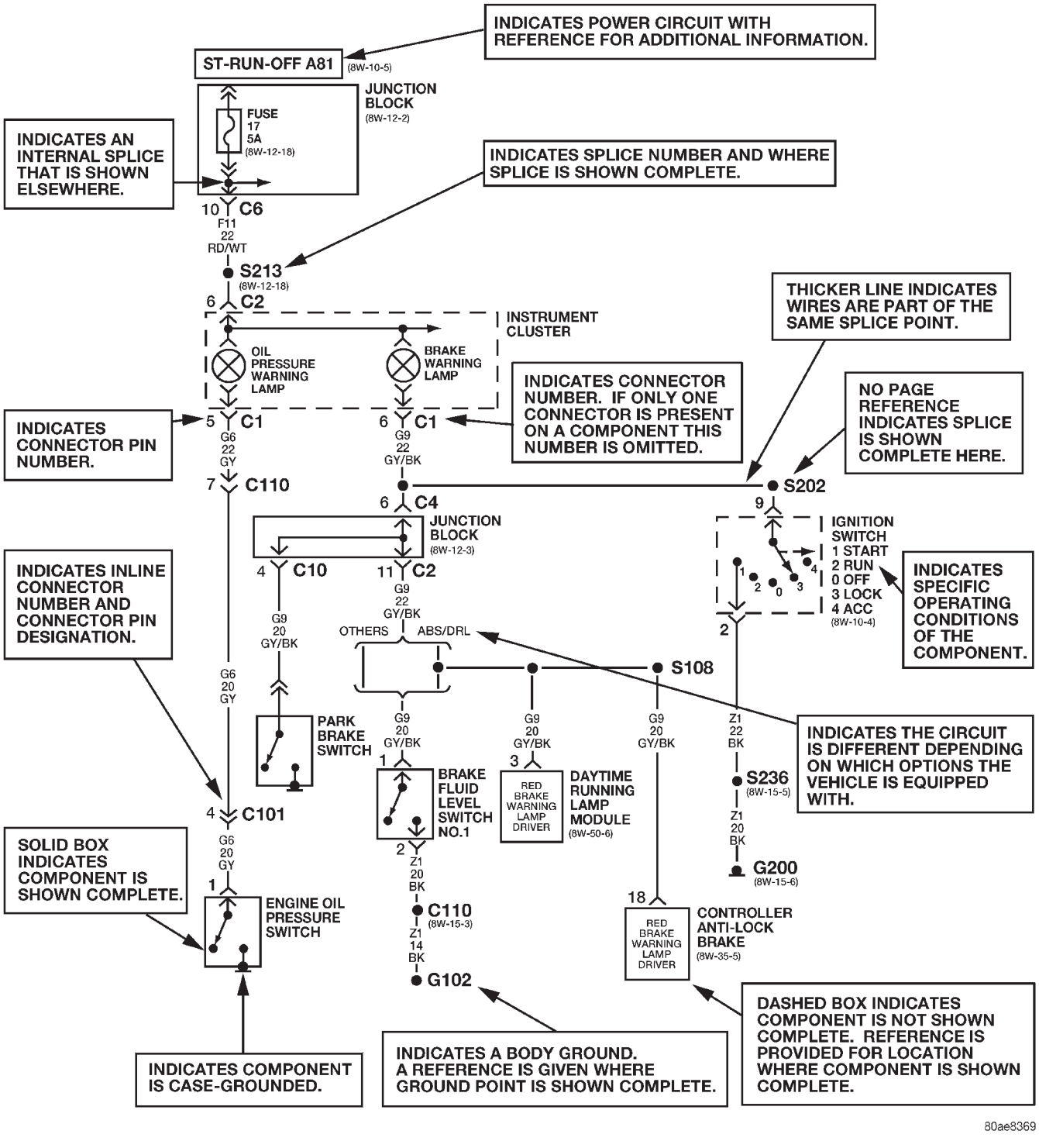

DESCRIPTION AND OPERATION (Continued)

CIRCUIT INFORMATION

Each wire shown in the diagrams contains a code which identifies the main circuit, part of the main circuit, gage of wire, and color (Fig. 1).

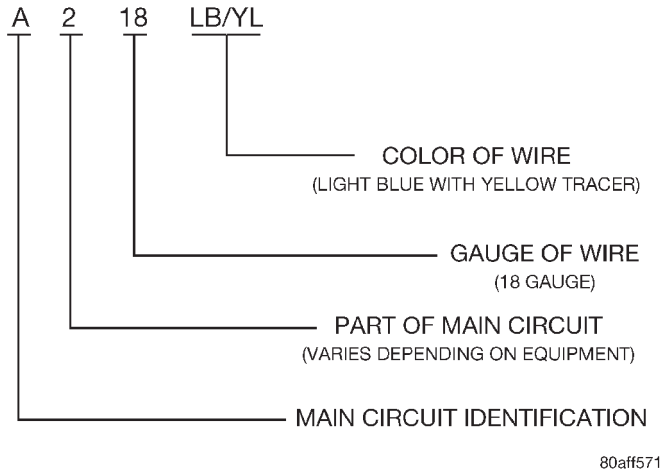

Fig. 1 Wire Code Identification

COLOR CODE	COLOR	STANDARD TRACER COLOR
BL	BLUE	WT
BK	BLACK	WT
BR	BROWN	WT
DB	DARK BLUE	WT
DG	DARK GREEN	WT
GY	GRAY	BK
LB	LIGHT BLUE	BK
LG	LIGHT GREEN	BK
OR	ORANGE	BK
PK	PINK	BK or WT
RD	RED	WT
TN	TAN	WT
VT	VIOLET	WT
WT	WHITE	BK
YL	YELLOW	BK
*	WITH TRACER	

CIRCUIT FUNCTIONS

All circuits in the diagrams use an alpha/numeric code to identify the wire and its function. To identify which circuit code applies to a system, refer to the Circuit Identification Code Chart. This chart shows the main circuits only and does not show the secondary codes that may apply to some models.

CIRCUIT	FUNCTION
A	BATTERY FEED
B	BRAKE CONTROLS
C	CLIMATE CONTROLS
D	DIAGNOSTIC CIRCUITS
E	DIMMING ILLUMINATION CIRCUITS
F	FUSED CIRCUITS
G	MONITORING CIRCUITS (GAUGES)
H	OPEN
I	NOT USED
J	OPEN
K	POWERTRAIN CONTROL MODULE
L	EXTERIOR LIGHTING
M	INTERIOR LIGHTING
N	NOT USED
O	NOT USED
P	POWER OPTION (BATTERY FEED)
Q	POWER OPTIONS (IGNITION FEED)
R	PASSIVE RESTRAINT
S	SUSPENSION/STEERING
T	TRANSMISSION/TRANSAXLE/ TRANSFER CASE
U	OPEN
V	SPEED CONTROL, WIPER/WASHER
W	OPEN
X	AUDIO SYSTEMS
Y	OPEN
Z	GROUNDS

DESCRIPTION AND OPERATION (Continued)

SECTION IDENTIFICATION

The wiring diagrams are grouped into individual sections. If a component is most likely found in a particular group, it will be shown complete (all wires, connectors, and pins) within that group. For example, the Auto Shutdown Relay is most likely to be found in Group 30, so it is shown there complete. It can, however, be shown partially in another group if it contains some associated wiring.

SYMBOLS

International symbols are used throughout the wiring diagrams. These symbols are consistent with those being used around the world.

GROUP	TOPIC
8W-01 thru 8W-09	General Information and Diagram Overview
8W-10 thru 8W-19	Main Sources of Power and Vehicle Grounding
8W-20 thru 8W-29	Starting and Charging
8W-30 thru 8W-39	Powertrain/Drivetrain Systems
8W-40 thru 8W-49	Body Electrical items and A/C
8W-50 thru 8W-59	Exterior Lighting, Wipers, and Trailer Tow
8W-60 thru 8W-69	Power Accessories
8W-70	Splice Information
8W-80	Connector Pin Outs
8W-90	Connector Locations (including grounds)
8W-95	Splice Locations

DESCRIPTION AND OPERATION (Continued)

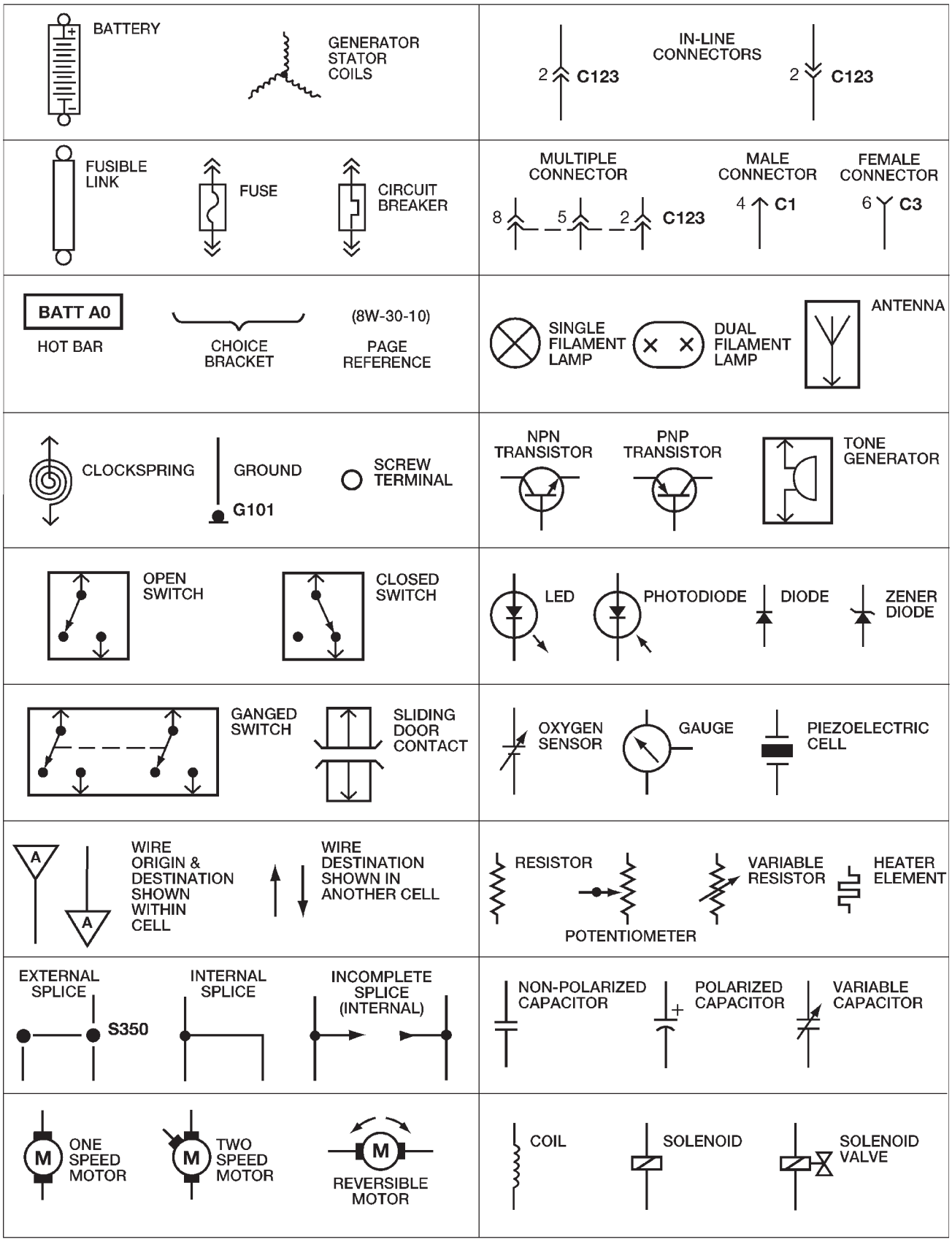

80ae8370

Wiring Diagram Symbols

DESCRIPTION AND OPERATION (Continued)

TERMINOLOGY

This a list of terms with there definitions used in the wiring diagrams.

Built-Up-Export . . . . . .Vehicles Built For Sale In Markets Other Than North America
Except-Built-Up-Export . . . . .Vehicles Built For Sale In North America
LHD . . . . . .Left Hand Drive Vehicles
RHD . . . . . .Right Hand Drive Vehicles
ATX . . . .Automatic Transmission-Front Wheel Drive
MTX. . . . . .Manual Transmission-Front Wheel Drive
AT . . . . . .Automatic Transmission-Rear Wheel Drive
MT . . . . . .Manual Transmission-Rear Wheel Drive
SOHC. . . . . .Single Over Head Cam Engine
DOHC . . . . . .Dual Over Head Cam Engine

CONNECTOR INFORMATION

CAUTION: Not all connectors are serviced. Some connectors are serviced only with a harness. A typical example might be the Supplemental Restraint System connectors. Always check parts availability before attempting a repair.

IDENTIFICATION

In-line connectors are identified by a number, as follows:

- In-line connectors located on the **engine compartment harness** are **C100** series numbers.
- Connectors located on the **instrument panel harness** are **C200** series numbers.
- Connectors located on the **body harness** are **C300** series numbers.
- **Jumper harness connectors** are **C400** series numbers.
- **Grounds and ground connectors** are identified with a **"G"** and follow the same series numbering as the in-line connector.

Component connectors are identified by the component name instead of a number (Fig. 2). Multiple connectors on a component use a C1, C2, etc. identifier (Fig. 3).

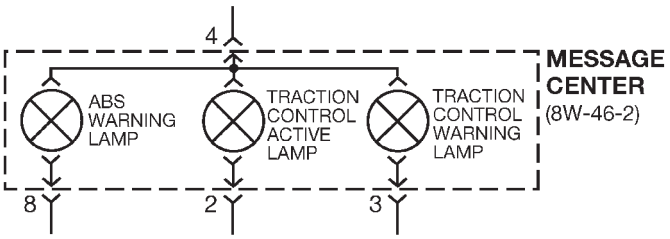

Fig. 2 Component Identification

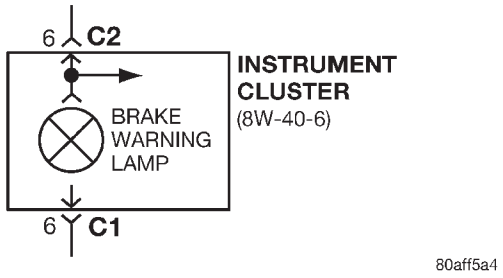

Fig. 3 Connector Identification

LOCATIONS

Section 8W-90 contains connector/ground location illustrations. The illustrations contain the connector name (or number)/ground number and component identification. Connector/ground location charts in Section 8W-90 reference the illustration number for components and connectors.

Section 8W-80 shows each connector and the circuits involved with that connector. The connectors are identified using the name/number on the Diagram pages.

SPLICE LOCATIONS

Splice Location charts in Section 8W-70 show the entire splice, and provide references to other sections the splice serves.

Section 8W-95 contains illustrations that show the general location of the splices in each harness. The illustrations show the splice by number, and provide a written location.

NOTES, CAUTIONS, and WARNINGS

Throughout this group additional important information is presented in three ways; Notes, Cautions, and Warnings.

NOTES are used to help describe how switches or components operate to complete a particular circuit. They are also used to indicate different conditions that may appear on the vehicle. For example, an up-to and after condition.

CAUTIONS are used to indicate information that could prevent making an error that may damage the vehicle.

WARNINGS provide information to prevent personal injury and vehicle damage. Below is a list of general warnings that should be followed any time a vehicle is being serviced.

WARNING: ALWAYS WEAR SAFETY GLASSES FOR EYE PROTECTION.

WARNING: USE SAFETY STANDS ANYTIME A PROCEDURE REQUIRES BEING UNDER A VEHICLE.

DESCRIPTION AND OPERATION (Continued)

WARNING: BE SURE THAT THE IGNITION SWITCH ALWAYS IS IN THE OFF POSITION, UNLESS THE PROCEDURE REQUIRES IT TO BE ON.

WARNING: SET THE PARKING BRAKE WHEN WORKING ON ANY VEHICLE. AN AUTOMATIC TRANSMISSION SHOULD BE IN PARK. A MANUAL TRANSMISSION SHOULD BE IN NEUTRAL.

WARNING: OPERATE THE ENGINE ONLY IN A WELL-VENTILATED AREA.

WARNING: KEEP AWAY FROM MOVING PARTS WHEN THE ENGINE IS RUNNING, ESPECIALLY THE FAN AND BELTS.

WARNING: TO PREVENT SERIOUS BURNS, AVOID CONTACT WITH HOT PARTS SUCH AS THE RADIATOR, EXHAUST MANIFOLD(S), TAIL PIPE, CATALYTIC CONVERTER, AND MUFFLER.

WARNING: DO NOT ALLOW FLAME OR SPARKS NEAR THE BATTERY. GASES ARE ALWAYS PRESENT IN AND AROUND THE BATTERY.

WARNING: ALWAYS REMOVE RINGS, WATCHES, LOOSE HANGING JEWELRY, AND LOOSE CLOTHING.

TAKE OUTS

The abbreviation T/O is used in the component location section to indicate a point in which the wiring harness branches out to a component.

ELECTROSTATIC DISCHARGE (ESD) SENSITIVE DEVICES

All ESD sensitive components are solid state and a symbol (Fig. 4) is used to indicate this. When handling any component with this symbol comply with the following procedures to reduce the possibility of electrostatic charge build up on the body and inadvertent discharge into the component. If it is not known whether the part is ESD sensitive, assume that it is.

(1) Always touch a known good ground before handling the part. This should be repeated while handling the part and more frequently after sliding across a seat, sitting down from a standing position, or walking a distance.

(2) Avoid touching electrical terminals of the part, unless instructed to do so by a written procedure.

(3) When using a voltmeter, be sure to connect the ground lead first.

(4) Do not remove the part from its protective packing until it is time to install the part.

(5) Before removing the part from its package, ground the package to a known good ground on the vehicle.

948W-193

Fig. 4 Electrostatic Discharge Symbol

POSITIVE TEMPERATURE COEFFICIENT

Positive Temperature Coefficient (PTC) devices are being used for circuit protection. These PTC's act like a solid state fuse. They are located in the junction block, and are used to protect such items as: power door lock motors, power windows, and various engine solenoids.

A special symbol is used to identify these in the wiring diagrams (Fig. 5).

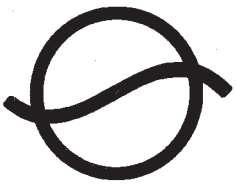

958W-30

Fig. 5 Positive Temperature Coefficient Symbol

DIAGNOSIS AND TESTING

TROUBLESHOOTING TOOLS

When diagnosing a problem in an electrical circuit there are several common tools necessary. These tools are listed and explained below.

- Jumper Wire - This is a test wire used to connect two points of a circuit. It can be used to bypass an open in a circuit.

WARNING: NEVER USE A JUMPER WIRE ACROSS A LOAD, SUCH AS A MOTOR, CONNECTED BETWEEN A BATTERY FEED AND GROUND.

DIAGNOSIS AND TESTING (Continued)

• Voltmeter - Used to check for voltage on a circuit. Always connect the black lead to a known good ground and the red lead to the positive side of the circuit.

CAUTION: Most of the electrical components used in today's vehicle are solid state. When checking voltages in these circuits use a meter with a 10-megohm or greater impedance rating.

• Ohmmeter - Used to check the resistance between two points of a circuit. Low or no resistance in a circuit means good continuity.

CAUTION: - Most of the electrical components used in today's vehicle are Solid State. When checking resistance in these circuits use a meter with a 10-megohm or greater impedance rating. In addition, make sure the power is disconnected from the circuit. Circuits that are powered up by the vehicle electrical system can cause damage to the equipment and provide false readings.

• Probing Tools - These tools are used for probing terminals in connectors (Fig. 6). Select the proper size tool from Special Tool Package 6807, and insert it into the terminal being tested. Use the other end of the tool to insert the meter probe.

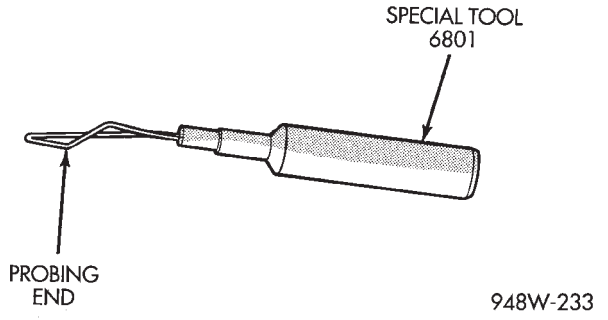

Fig. 6 Probing Tool

INTERMITTENT AND POOR CONNECTIONS

Most intermittent electrical problems are caused by faulty electrical connections or wiring. It is also possible for a sticking component or relay to cause a problem. Before condemning a component or wiring assembly check the following items.

• Connectors are fully seated
• Spread terminals, or terminal push out
• Terminals in the wiring assembly are fully seated into the connector/component and locked in position
• Dirt or corrosion on the terminals. Any amount of corrosion or dirt could cause an intermittent problem
• Damaged connector/component casing exposing the item to dirt and moisture
• Wire insulation that has rubbed through causing a short to ground
• Some or all of the wiring strands broken inside of the insulation covering.
• Wiring broken inside of the insulation

TROUBLESHOOTING TESTS

Before beginning any tests on a vehicles electrical system use the Wiring Diagrams and study the circuit. Also refer to the Troubleshooting Wiring Problems in this section.

TESTING FOR VOLTAGE POTENTIAL

(1) Connect the ground lead of a voltmeter to a known good ground (Fig. 7).

(2) Connect the other lead of the voltmeter to the selected test point. The vehicle ignition may need to be turned ON to check voltage. Refer to the appropriate test procedure.

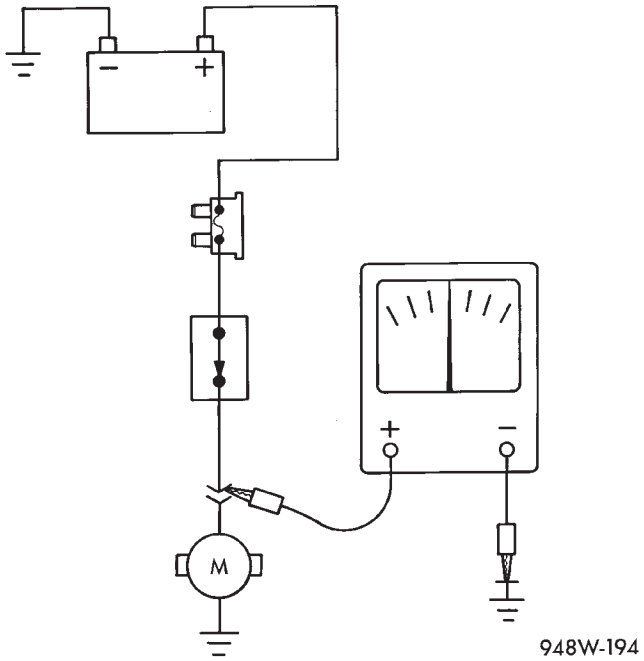

Fig. 7 Testing for Voltage Potential

TESTING FOR CONTINUITY

(1) Remove the fuse for the circuit being checked or, disconnect the battery.

(2) Connect one lead of the ohmmeter to one side of the circuit being tested (Fig. 8).

(3) Connect the other lead to the other end of the circuit being tested. Low or no resistance means good continuity.

TESTING FOR A SHORT TO GROUND

(1) Remove the fuse and disconnect all items involved with the fuse.

(2) Connect a test light or a voltmeter across the terminals of the fuse.

DIAGNOSIS AND TESTING (Continued)

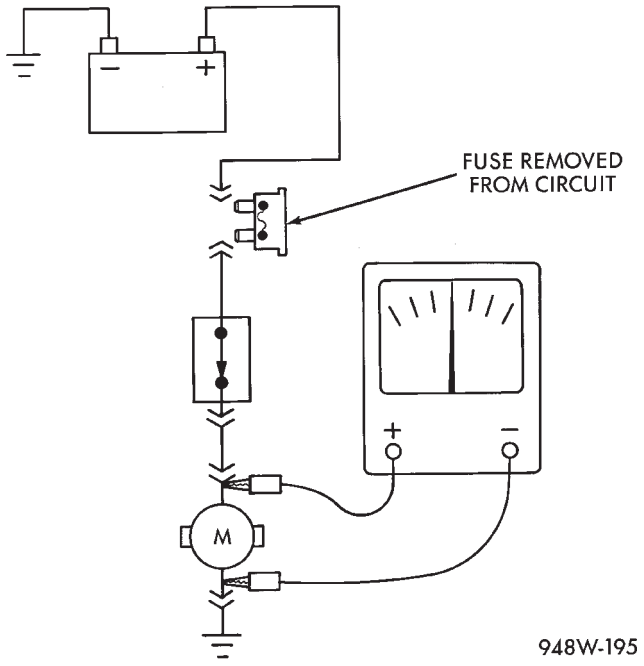

Fig. 8 Testing for Continuity

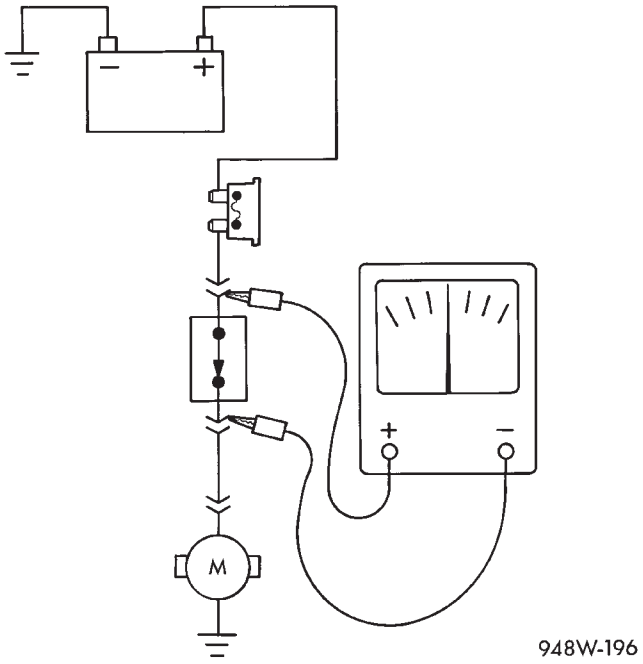

Fig. 9 Testing for Voltage Drop

(3) Starting at the fuse block, wiggle the wiring harness about six to eight inches apart and watch the voltmeter/test lamp.

(4) If the voltmeter registers voltage or the test lamp glows, there is a short to ground in that general area of the wiring harness.

TESTING FOR A SHORT TO GROUND ON FUSES POWERING SEVERAL LOADS

(1) Refer to the wiring diagrams and disconnect or isolate all items on the suspected fused circuits.

(2) Replace the blown fuse.

(3) Supply power to the fuse by turning ON the ignition switch or re-connecting the battery.

(4) Start connecting the items in the fuse circuit one at a time. When the fuse blows the circuit with the short to ground has been isolated.

TESTING FOR A VOLTAGE DROP

(1) Connect the positive lead of the voltmeter to the side of the circuit closest to the battery (Fig. 9).

(2) Connect the other lead of the voltmeter to the other side of the switch or component.

(3) Operate the item.

(4) The voltmeter will show the difference in voltage between the two points.

TROUBLESHOOTING WIRING PROBLEMS

When troubleshooting wiring problems there are six steps which can aid in the procedure. The steps are listed and explained below. Always check for non-factory items added to the vehicle before doing any diagnosis. If the vehicle is equipped with these items, disconnect them to verify these add-on items are not the cause of the problem.

(1) Verify the problem.

(2) Verify any related symptoms. Do this by performing operational checks on components that are in the same circuit. Refer to the wiring diagrams.

(3) Analyze the symptoms. Use the wiring diagrams to determine what the circuit is doing, where the problem most likely is occurring and where the diagnosis will continue.

(4) Isolate the problem area.

(5) Repair the problem.

(6) Verify proper operation. For this step check for proper operation of all items on the repaired circuit. Refer to the wiring diagrams.

SERVICE PROCEDURES

WIRING REPAIR

When replacing or repairing a wire, it is important that the correct gage be used as shown in the wiring diagrams. The wires must also be held securely in place to prevent damage to the insulation.

(1) Disconnect battery negative cable

(2) Remove 1 inch of insulation from each end of the wire.

(3) Place a piece of heat shrink tubing over one side of the wire. Make sure the tubing will be long enough to cover and seal the entire repair area.

(4) Spread the strands of the wire apart on each part of the exposed wire (example 1). (Fig. 10)

SERVICE PROCEDURES (Continued)

(5) Push the two ends of wire together until the strands of wire are close to the insulation (example 2) (Fig. 10)

(6) Twist the wires together (example 3) (Fig. 10)

(7) Solder the connection together using rosin core type solder only. **Do not use acid core solder.**

(8) Center the heat shrink tubing over the joint, and heat using a heat gun. Heat the joint until the tubing is tightly sealed and sealant comes out of both ends of the tubing.

(9) Secure the wire to the existing ones to prevent chafing or damage to the insulation

(10) Connect battery and test all affected systems.

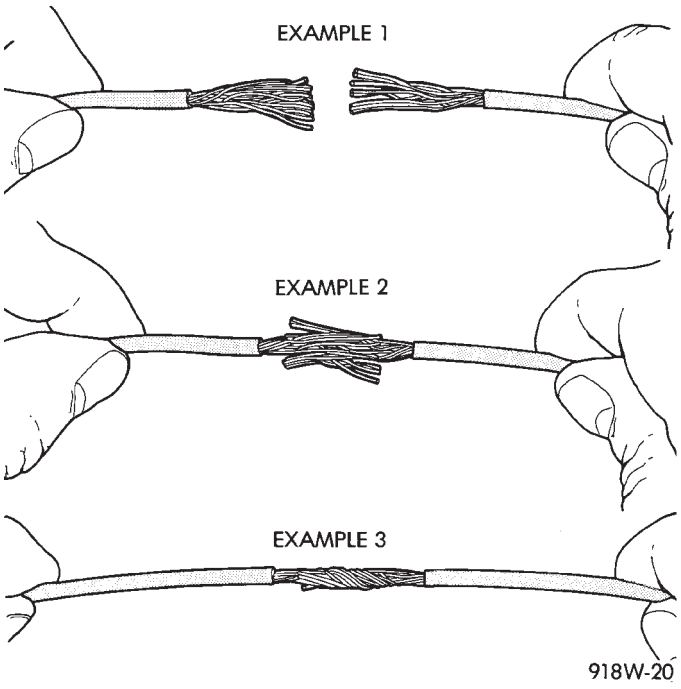

Fig. 10 Wire Repair

TERMINAL/CONNECTOR REPAIR-MOLEX CONNECTORS

(1) Disconnect battery.

(2) Disconnect the connector from its mating half/component.

(3) Insert the terminal releasing special tool 6742 into the terminal end of the connector (Fig. 11).

(4) Using special tool 6742 release the locking fingers on the terminal (Fig. 12).

(5) Pull on the wire to remove it from the connector.

(6) Repair or replace the connector or terminal, as necessary.

CONNECTOR REPLACEMENT

(1) Disconnect battery.

(2) Disconnect the connector that is to be repaired from its mating half/component

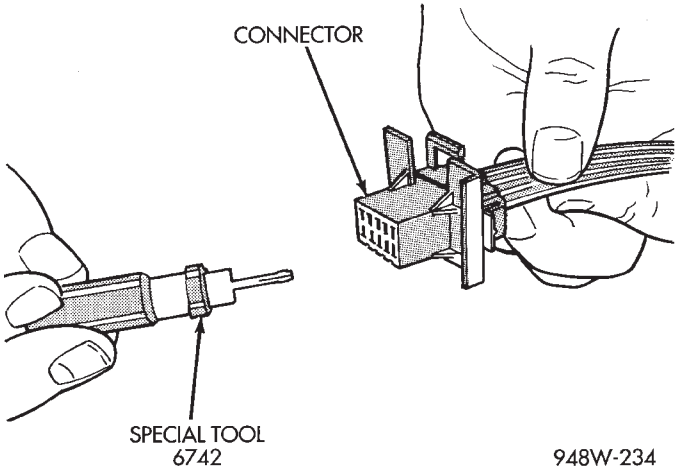

Fig. 11 Molex Connector Repair

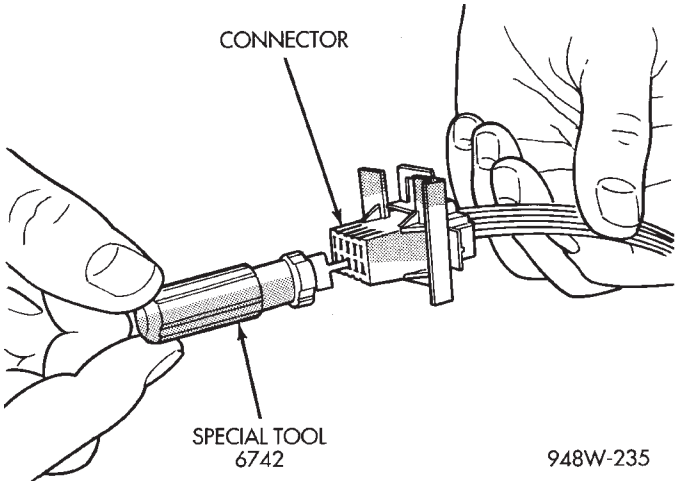

Fig. 12 Using Special Tool 6742

(3) Remove the connector locking wedge, if required (Fig. 13)

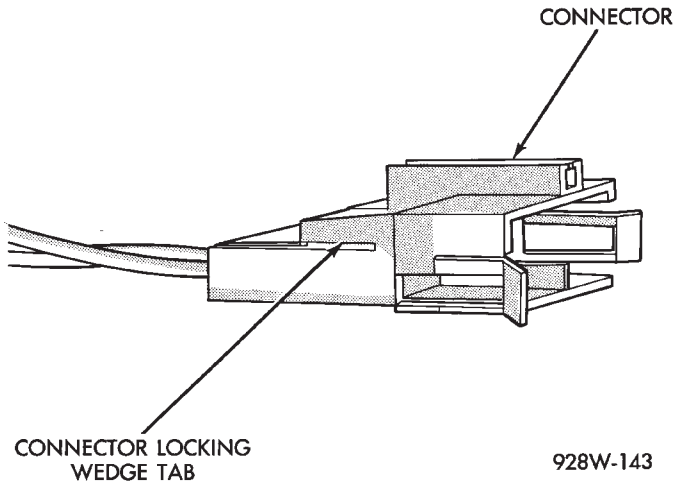

Fig. 13 Connector Locking Wedge

(4) Position the connector locking finger away from the terminal using the proper pick from special tool

SERVICE PROCEDURES (Continued)

kit 6680. Pull on the wire to remove the terminal from the connector (Fig. 14) (Fig. 15).

(5) Reset the terminal locking tang, if it has one.

(6) Insert the removed wire in the same cavity on the repair connector.

(7) Repeat steps four through six for each wire in the connector, being sure that all wires are inserted into the proper cavities. For additional connector pin-out identification, refer to the wiring diagrams.

(8) Insert the connector locking wedge into the repaired connector, if required.

(9) Connect connector to its mating half/component.

(10) Connect battery and test all affected systems.

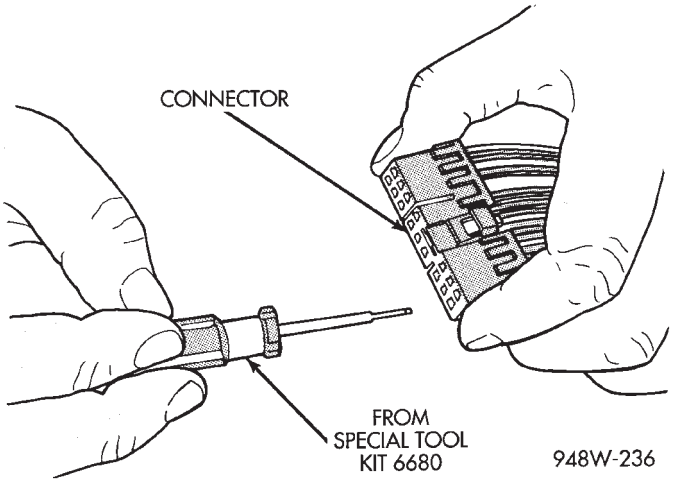

Fig. 14 Terminal Removal

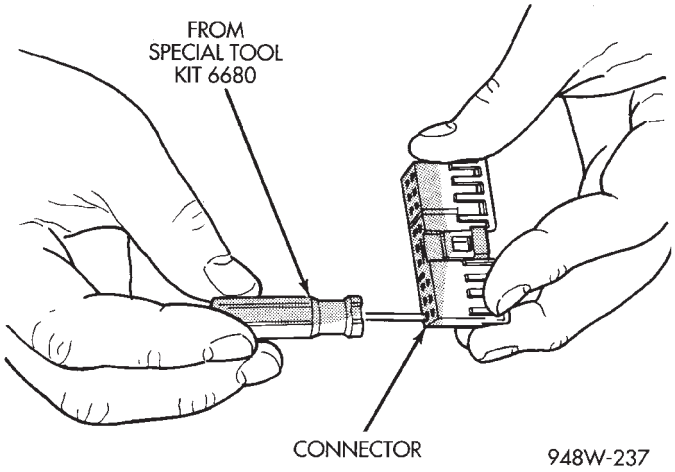

Fig. 15 Terminal Removal Using Special Tool

CONNECTOR AND TERMINAL REPLACEMENT

(1) Disconnect battery.

(2) Disconnect the connector (that is to be repaired) from its mating half/component.

(3) Cut off the existing wire connector directly behind the insulator. Remove six inches of tape from the harness.

(4) Stagger cut all wires on the harness side at 1/2 inch intervals (Fig. 16).

(5) Remove 1 inch of insulation from each wire on the harness side.

(6) Stagger cut the matching wires on the repair connector assembly in the opposite order as was done on the harness side of the repair. Allow extra length for soldered connections. Check that the overall length is the same as the original (Fig. 16).

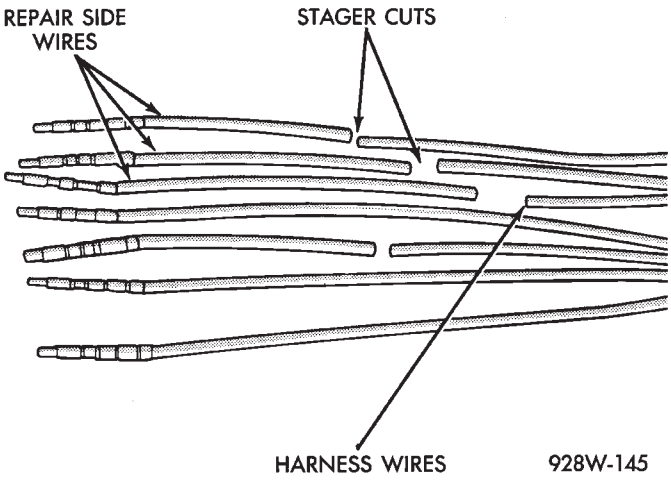

Fig. 16 Stagger Cutting Wires

(7) Remove 1 inch of insulation from each wire.

(8) Place a piece of heat shrink tubing over one side of the wire. Be sure the tubing will be long enough to cover and seal the entire repair area.

(9) Spread the strands of the wire apart on each part of the exposed wires.

(10) Push the two ends of wire together until the strands of wire are close to the insulation.

(11) Twist the wires together.

(12) Solder the connection together using rosin core type solder only. **Do not use acid core solder.**

(13) Center the heat shrink tubing over the joint and heat using a heat gun. Heat the joint until the tubing is tightly sealed and sealant comes out of both ends of the tubing

(14) Repeat steps 8 through 13 for each wire.

(15) Re-tape the wire harness starting 1-1/2 inches behind the connector and 2 inches past the repair.

(16) Re-connect the repaired connector.

(17) Connect the battery, and test all affected systems.

TERMINAL/CONNECTOR REPAIR- AUGAT CONNECTORS

(1) Disconnect battery.

(2) Disconnect the connector from its mating half/component.

(3) Push down on the yellow connector locking tab to release the terminals (Fig. 17).

(4) Using special tool 6932, push the terminal to remove it from the connector (Fig. 18).

SERVICE PROCEDURES (Continued)

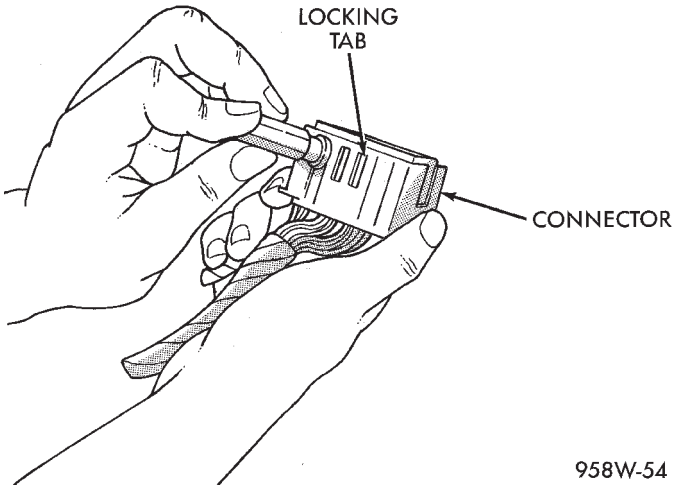

Fig. 17 Augat Connector Repair

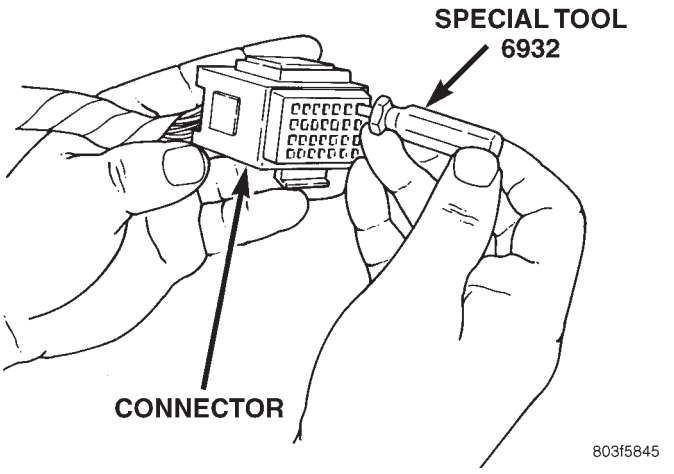

Fig. 18 Using Special Tool 6932

(5) Repair or replace the connector or terminal as necessary.

(6) When re-assembling the connector, the locking wedge must be placed in the locked position to prevent terminal push out.

TERMINAL REPLACEMENT

(1) Disconnect battery.

(2) Disconnect the connector being repaired from its mating half. Remove connector locking wedge, if required (Fig. 19).

(3) Remove connector locking wedge, if required (Fig. 19).

(4) Position the connector locking finger away from the terminal using the proper pick from special tool kit 6680. Pull on the wire to remove the terminal from the connector (Fig. 20) (Fig. 21).

(5) Cut the wire 6 inches from the back of the connector.

(6) Remove 1 inch of insulation from the wire on the harness side.

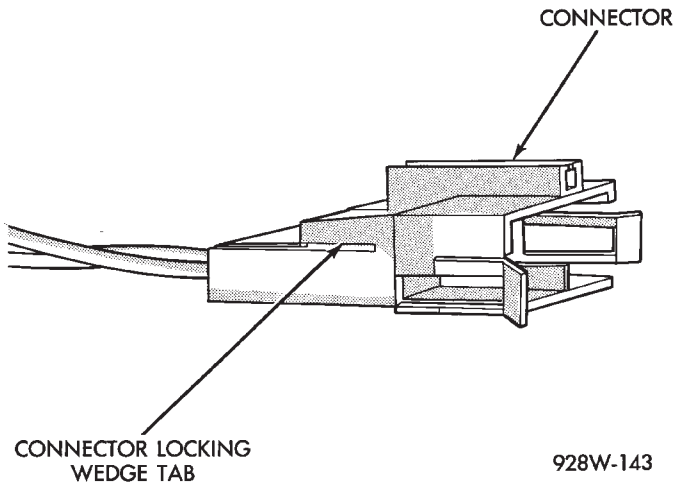

Fig. 19 Connector Locking Wedge Tab (Typical)

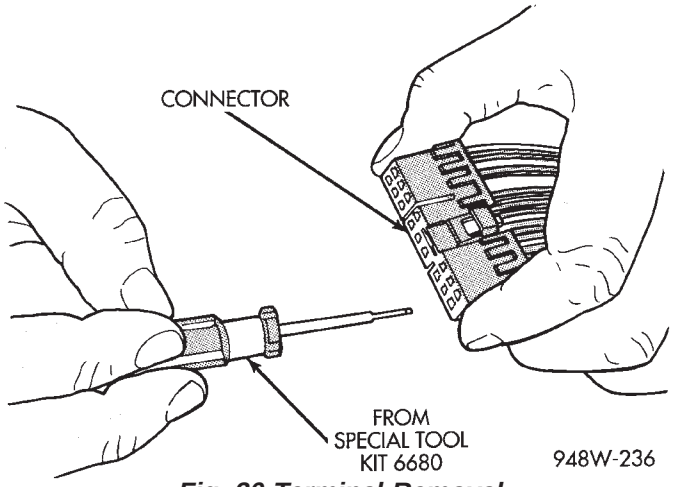

Fig. 20 Terminal Removal

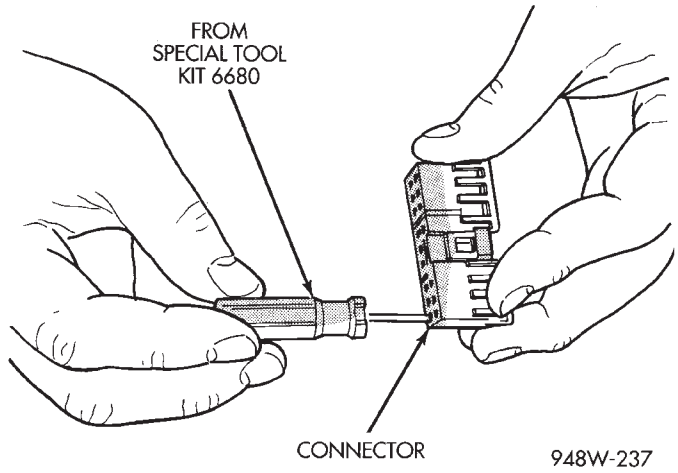

Fig. 21 Terminal Removal Using Special Tool

(7) Select a wire from the terminal repair assembly that best matches the color wire being repaired.

(8) Cut the repair wire to the proper length and remove 1 inch of insulation.

SERVICE PROCEDURES (Continued)

(9) Place a piece of heat shrink tubing over one side of the wire. Make sure the tubing will be long enough to cover and seal the entire repair area.

(10) Spread the strands of the wire apart on each part of the exposed wires.

(11) Push the two ends of wire together until the strands of wire are close to the insulation.

(12) Twist the wires together.

(13) Solder the connection together using rosin core type solder only. **Do not use acid core solder.**

(14) Center the heat shrink tubing over the joint and heat using a heat gun. Heat the joint until the tubing is tightly sealed and sealant comes out of both ends of the tubing.

(15) Insert the repaired wire into the connector.

(16) Install the connector locking wedge, if required, and reconnect the connector to its mating half/component.

(17) Re-tape the wire harness starting 1-1/2 inches behind the connector and 2 inches past the repair.

(18) Connect battery, and test all affected systems.

DIODE REPLACEMENT

(1) Disconnect the battery.

(2) Locate the diode in the harness, and remove the protective covering.

(3) Remove the diode from the harness, pay attention to the current flow direction (Fig. 22).

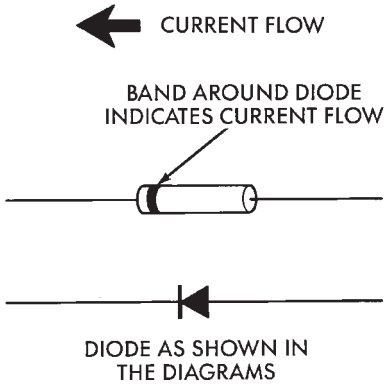

Fig. 22 Diode Identification

(4) Remove the insulation from the wires in the harness. Only remove enough insulation to solder in the new diode.

(5) Install the new diode in the harness, making sure current flow is correct. If necessary refer to the appropriate wiring diagram for current flow.

(6) Solder the connection together using rosin core type solder only. **Do not use acid core solder.**

(7) Tape the diode to the harness using electrical tape making, sure the diode is completely sealed from the elements.

(8) Re-connect the battery, and test affected systems.

SPECIAL TOOLS

WIRING/TERMINAL

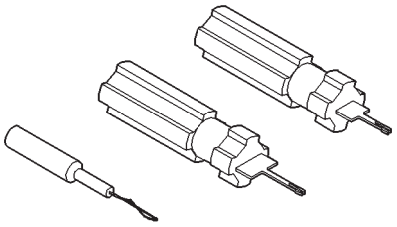

Probing Tool Package 6807

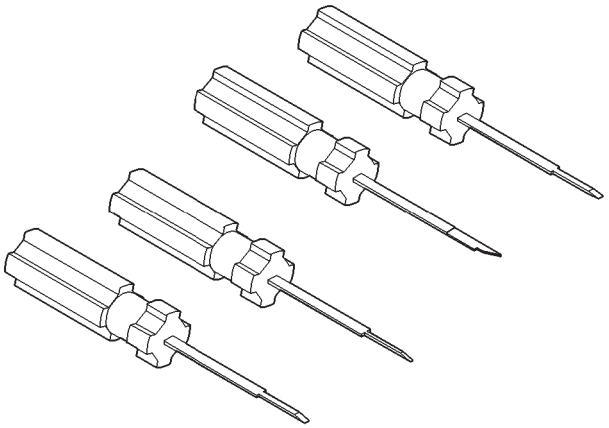

Terminal Pick 6680

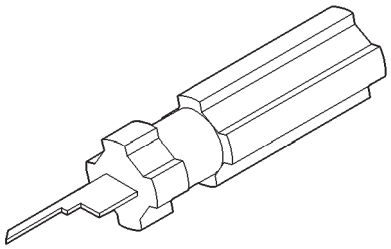

Terminal Removing Tool 6932

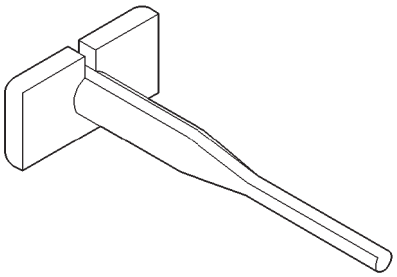

Terminal Removing Tool 6934

8W-02 COMPONENT INDEX

Component	Page
2-4 Pressure Switch	8W-31
2-4 Solenoid	8W-31
A/C Compressor Clutch	8W-42
A/C Compressor Clutch Relay	8W-10, 42
A/C Heater Control	8W-42
A/C On Indicator	8W-42
A/C Pressure Transducer	8W-30, 42
A/C Switch	8W-42
A/C Zone Door Actuator	8W-42
ABS Warning Lamp	8W-35, 46
Accelerator Pedal Position Sensor	8W-30
Airbag Control Module	8W-43
Airbag Indicator Lamp	8W-43
Airbag Warning Lamp	8W-46
All Wheel Drive Solenoid	8W-31
Ambient Air Temperature Sensor	8W-49
Ash Receiver Lamp	8W-44
Automatic Day/Night Mirror	8W-44
Automatic Shut Down Relay	8W-10, 30
Splice Information	8W-70
Back-Up Lamp	8W-51
Back-Up Switch	8W-44, 51
Battery	8W-20
Blend Door Actuator	8W-42
Body Control Module	8W-45
Brake Pressure Switch	8W-46
Brake Warning Lamp	8W-46
Camshaft Position Sensor	8W-30
Center Dome Lamp	8W-44
Center High Mounted Stop Lamp	8W-51
Cigar/Accessory Relay	8W-41
Clockspring	8W-10, 15, 30, 33, 39, 40, 41, 43
Cluster Illumination Lamps	8W-40
Clutch Interlock Switch	8W-12, 21
Clutch Interlock Switch Jumper	8W-12, 21, 31
Clutch Switch	8W-30, 33
Combination Flasher/DRL Module	8W-50, 51, 52
Combination Relays	8W-54
Compass/Mini-Trip Computer	8W-49
Control Sleeve Sensor	8W-30
Controller Anti-Lock Brake	8W-35
Courtesy Lamp Relay	8W-10, 12, 44, 50
Crank Case Heater	8W-30
Crankshaft Position Sensor	8W-30
Cruise Indicator Lamp	8W-40
Data Link Connector	8W-30
Diesel Power Relay	8W-10, 30
Dome Lamp Switch	8W-50
Door Ajar Indicator Lamp	8W-40
Door Ajar Switches	8W-39, 40, 44
Door Lock Relay	8W-61
Speakers	8W-47
Door Unlock Relay	8W-61
Oxygen Sensors	8W-30
Door Ajar Switches	8W-39, 40, 44, 45
Door Arm/Disarm Switches	8W-39, 61
Door Courtesy Lamps	8W-44
Door Lock Motors	8W-61
Door Lock Switches	8W-61
Door Unlock Relays	8W-61
Heated Seat Backs	8W-63
Heated Seat Cushions	8W-63
Heated Seat Modules	8W-63
Heated Seat Switches	8W-63
Power Mirrors	8W-62
Power Seat Switches	8W-63
Power Window Switches	8W-60
Seat Motors	8W-63
Window Motors	8W-60
Radiator Fans	8W-42
Dump Solenoid	8W-33
EGR Solenoid	8W-30
Electric Wiper De-Icer	8W-48
Electronic PRNDL Indicator	8W-40
Engine Coolant Temperature Gauge	8W-40
Engine Coolant Temperature Lamp	8W-46
Engine Coolant Temperature Sensor	8W-30
Engine Oil Pressure Switch	8W-46
Engine Speed Sensor	8W-30
Engine Starter Motor	8W-21
Engine Starter Motor Relay	8W-10, 21
Evap Leak Detection Pump	8W-30
Evap/Purge Solenoid	8W-30
Evaporator Temperature Sensor	8W-42
Express Down Module	8W-60
Flexible Fuel Sensor	8W-30
Fog Lamps	8W-50
Fog Lamp Relay	8W-50
Front Blower Motor	8W-42
Front Blower Motor Relay	8W-10, 42
Front Blower Motor Resistor Block	8W-42
Front Cigar Lighter/Power Outlet	8W-41
Front Reading Lamp Defeat Switch	8W-44
Front Reading Lamps/Switch	8W-44
Front Washer Motor	8W-53
Front Wiper Switch	8W-53
Fuel Gauge	8W-40
Fuel Heater	8W-30
Fuel Heater Relay	8W-10, 30
Fuel Injectors	8W-30
Fuel Pump Module	8W-30
Fuel Pump Relay	8W-10, 30
Fuel Quantity Actuator	8W-30
Fuel Shutdown Solenoid	8W-30

Component	Page
Fuel Tank Module	8W-30, 45
Fuel Temperature Sensor	8W-30
Fuel Timing Solenoid	8W-30
Fuses (JB)	8W-12
Fuses (PDC)	8W-10
Fusible Link	8W-20, 21, 63
Fusible Link A0	8W-30
Fusible Link A11	8W-10
Fusible Link A54	8W-10
Grounds	8W-15
Generator	8W-20
Glove Box Lamp	8W-44
Glow Plug Lamp	8W-30, 46
Glow Plugs	8W-30
Glow Plug Relay	8W-30
Headlamps	8W-50
Headlamp Dimmer Switch	8W-10, 46, 50
Headlamp Leveling Motors	8W-50
Headlamp Switch	8W-50
Headlamp Washer	8W-53
High Beam Indicator	8W-46
High Beam Relay	8W-10, 50
Headlamps	8W-50
Horns	8W-41
Hood Ajar Switch	8W-39, 44
Horn Relay	8W-39, 41
Horn Switch	8W-10, 39, 41
HVAC Control	8W-42
Idle Air Control Motor	8W-30
Ignition Coil Pack	8W-30
Ignition Switch	8W-10
Instrument Cluster	8W-40
Intake Air Temperature Sensor	8W-30
Intake Air Temperature/Manifold Absolute Pressure Sensor	8W-30
Interior Lamps On Switch	8W-44
Junction Block	8W-12
Key-In Halo Lamp	8W-44
Knock Sensor	8W-30
Lamp Assemblies	8W-51
License Lamp	8W-51
Liftgate Ajar Indicator Lamp	8W-40
Liftgate Ajar Switch	8W-39, 40, 44
Liftgate Arm/Disarm Switch	8W-39, 61
Liftgate Flood Lamps	8W-44
Liftgate Lock Motor	8W-61
Low Beam Relay	8W-10, 50
Low Coolant Level Switch	8W-45
Low Fuel Warning Indicator Lamp	8W-40
Low Oil Pressure Lamp	8W-46
Low Washer Fluid Level Indicator Lamp	8W-40
Low Washer Fluid Switch	8W-53
Low/Reverse Pressure Switch	8W-31
Low/Reverse Solenoid	8W-31
Manifold Absolute Pressure Sensor	8W-30
Memory Power Seat Switch	8W-63
Seat Sensors	8W-63
Memory Seat/Mirror Module	8W-62, 63
Memory Set Switch	8W-62, 63
Message Center	8W-46
Mid Reading Lamps	8W-44
Mode Door Actuator	8W-42
Name Brand Speaker Relay	8W-47
Needle Movement Sensor	8W-30
Odometer	8W-40
Output Shaft Speed Sensor	8W-31
Overdrive Pressure Switch	8W-31
Overdrive Solenoid	8W-31
Overhead Console	8W-49
Park Brake Switch	8W-46, 50
Park Lamp Relay	8W-10, 12, 44, 50, 51, 54
Park/Turn Signal Lamps	8W-50
Airbag Squibs	8W-43
Power Distribution Center	8W-10
Power Folding Mirror Switch	8W-62
Power Mirror Fold Relay	8W-62
Power Mirror Switch	8W-62
Power Mirror Unfold Relay	8W-62
Power Seat Circuit Breaker	8W-62, 63
Powertrain Control Module	8W-30
PTCs (JB)	8W-12
Radiator Fan Disconnect	8W-42
Radiator Fan Relays	8W-42
Radio	8W-47
Radio Choke	8W-47
Reading Lamps	8W-44
Rear A/C Heater Unit	8W-42
Rear Blower Control Switches	8W-42
Rear Cigar Lighter/Power Outlet	8W-41
Rear Defogger On Indicator	8W-42
Rear Dome Lamp	8W-44
Rear Fog Lamp	8W-51
Rear Fog Lamp Indicator	8W-51
Rear Washer Motor	8W-53
Rear Washer Switch	8W-42, 53
Rear Window Defogger	8W-48
Rear Window Defogger Relay	8W-48
Rear Window Defogger Switch	8W-42, 48
Rear Wiper Delay On Indicator	8W-42, 53
Rear Wiper Delay Switch	8W-42, 53
Rear Wiper Motor	8W-53
Rear Wiper On Indicator	8W-42, 53
Rear Wiper On Switch	8W-42, 53
Recirculate Mode Indicator	8W-42
Recirculate Mode Switch	8W-42
Recirculation Door Actuator	8W-42
Remote Keyless Entry Module	8W-61
Repeater Lamps	8W-51, 52

Component	Page
Seat Belt Indicator Lamp	8W-40
Seat Belt Switch	8W-40
Sentry Key Immobilizer Module	8W-39
Service Engine Soon Lamp	8W-30, 46
Sliding Door Contacts	8W-61
Sliding Door Lock Motors	8W-61
Speed Control Switches	8W-30, 33
Speedometer	8W-40
Stop Lamp Switch	8W-33, 51
Stop/Turn Signal Relays	8W-54
Tachometer	8W-40
Tail/Stop Lamp	8W-51
Tail/Turn Signal Lamp	8W-51, 52
Throttle Position Sensor	8W-30
Traction Control Switch	8W-35
Trailer Tow Connector	8W-54
Transmission Control Module	8W-31
Transmission Control Relay	8W-10, 31
Transmission Control Solenoids	8W-31
Transmission Range Sensor	8W-31
Trip Odometer	8W-40
Turbine Speed Sensor	8W-31
Turbo Boost Pressure Sensor	8W-30
Turn Indicators	8W-46, 52
Turn Signal/Hazard Switch	8W-46, 52
Underdrive Solenoid	8W-31
Universal Garage Door Opener	8W-49
Vacuum Solenoid	8W-33
Vehicle Speed Control Servo	8W-33
Vehicle Speed Sensor	8W-30
Vent Motors	8W-60
Vent Solenoids	8W-33
Visor/Vanity Mirror Lamps	8W-44
Voltage Regulator	8W-20
Volts Indicator Lamp	8W-40
VTSS Lamp	8W-39, 46
Washer Module	8W-53
Wheel Speed Sensors	8W-35
Wiper High/Low Relay	8W-53
Wiper Module	8W-53
Wiper On Relay	8W-53

8W-10 POWER DISTRIBUTION

Component	Page
A/C Compressor Clutch	8W-10-29
A/C Compressor Clutch Relay	8W-10-10, 25, 29
Airbag Control Module	8W-10-35
Automatic Shut Down Relay	8W-10-9, 23
Battery	8W-10-8, 27, 28
Body Control Module	8W-10-11, 14, 16, 17, 19, 21, 30, 32
BS15	8W-10-33
BS16	8W-10-34
BS19	8W-10-30
BS33	8W-10-25
Center Dome Lamp	8W-10-21
Cigar/Accessory Relay	8W-10-10, 31
Clockspring	8W-10-30
Combination Flasher/DRL Module	8W-10-29, 32
Controller Anti-Lock Brake	8W-10-15, 29
Courtesy Lamp Relay	8W-10-21
Crank Case Heater	8W-10-27
CS01	8W-10-21
CS02	8W-10-20
CS1	8W-10-21
Data Link Connector	8W-10-11
Diesel Power Relay	8W-10-9, 25, 29
Door Lock Relay	8W-10-13
Door Unlock Relay	8W-10-13
Downstream Heated Oxygen Sensor	8W-10-23
Driver Door Courtesy Lamp	8W-10-21
Driver Door Unlock Relay	8W-10-13
Driver Power Mirror	8W-10-12, 22
EGR Solenoid	8W-10-25
Engine Starter Motor	8W-10-8, 16
Engine Starter Motor Relay	8W-10-8, 16
ES01	8W-10-27, 28
ES06	8W-10-25, 29
ES07	8W-10-29
ES09	8W-10-8
ES11	8W-10-8, 28
ES12	8W-10-23
ES26	8W-10-8
ES28	8W-10-8
ES29	8W-10-25, 29
ES40	8W-10-27
ES99	8W-10-24
Fog Lamp Relay	8W-10-33
Front Blower Motor	8W-10-18
Front Blower Motor Relay	8W-10-8, 18
Front Cigar Lighter/Power Outlet	8W-10-31
Front Reading Lamps/Switch	8W-10-20
Front Wiper Switch	8W-10-19
FS01	8W-10-24
FS03	8W-10-23
Fuel Heater	8W-10-27
Fuel Heater Relay	8W-10-9, 27
Fuel Injector No. 1	8W-10-23, 24
Fuel Injector No. 2	8W-10-23, 24
Fuel Injector No. 3	8W-10-23, 24
Fuel Injector No. 4	8W-10-23, 24
Fuel Injector No. 5	8W-10-24
Fuel Injector No. 6	8W-10-24
Fuel Pump Module	8W-10-25
Fuel Pump Relay	8W-10-9, 26
Fuel Tank Module	8W-10-26
Fuse 1 (JB)	8W-10-17
Fuse 1 (PDC)	8W-10-14, 35
Fuse 2 (JB)	8W-10-11, 16
Fuse 2 (PDC)	8W-10-35
Fuse 3 (JB)	8W-10-17
Fuse 4 (JB)	8W-10-17
Fuse 4 (PDC)	8W-10-10, 32, 33, 34
Fuse 5 (JB)	8W-10-17
Fuse 5 (PDC)	8W-10-10, 32, 33, 34
Fuse 6 (JB)	8W-10-16
Fuse 6 (PDC)	8W-10-10, 32, 33, 34
Fuse 7 (JB)	8W-10-12
Fuse 7 (PDC)	8W-10-10, 32, 33, 34
Fuse 8 (JB)	8W-10-16
Fuse 8 (PDC)	8W-10-10, 31
Fuse 9 (JB)	8W-10-16
Fuse 9 (PDC)	8W-10-10, 30
Fuse 10 (JB)	8W-10-16
Fuse 10 (PDC)	8W-10-10, 29
Fuse 11 (JB)	8W-10-14
Fuse 11 (PDC)	8W-10-10, 29
Fuse 12 (JB)	8W-10-14, 18
Fuse 12 (PDC)	8W-10-10, 29
Fuse 13 (PDC)	8W-10-10, 29
Fuse 15 (PDC)	8W-10-9, 28
Fuse 16 (JB)	8W-10-27
Fuse 16 (PDC)	8W-10-9, 26
Fuse 17 (PDC)	8W-10-9, 23, 25, 29
Fuse 18 (PDC)	8W-10-9, 20
Fuse 19 (PDC)	8W-10-8, 19
Fuse 20 (PDC)	8W-10-8, 19
Fuse 21 (PDC)	8W-10-8, 18
Fuse 22 (PDC)	8W-10-8, 17
Fuse 23 (PDC)	8W-10-8, 16
Fuse 24 (PDC)	8W-10-8, 15
Fuse 25 (PDC)	8W-10-8, 15
Fuse 26 (PDC)	8W-10-8, 13
Fuse 27 (PDC)	8W-10-8, 12
Fuse 28 (PDC)	8W-10-9, 11
Fusible Link A11	8W-10-8
Fusible Link A54	8W-10-8
G100	8W-10-27, 28
G103	8W-10-27, 28
G200	8W-10-14, 32
G300	8W-10-14, 18, 19, 31
Generator	8W-10-8, 23, 25
Glove Box Lamp	8W-10-20
Glow Plug Relay	8W-10-8, 25
Headlamp Dimmer Switch	8W-10-32
Headlamp Switch	8W-10-21, 34
High Beam Relay	8W-10-10, 32, 33, 34
High Note Horn	8W-10-30
Horn Relay	8W-10-10, 30
Horn Switch	8W-10-30
HS6D S02	8W-10-13
Ignition Coil Pack	8W-10-23
Ignition Switch	8W-10-11, 14, 16
Instrument Cluster	8W-10-11, 14
Junction Block	8W-10-11, 12, 13, 14, 16, 17, 18, 20, 21, 22, 26, 27, 29, 30, 31, 32, 35
Key-In Halo Lamp	8W-10-21
Left Headlamp	8W-10-33, 34
Left Headlamp Leveling Motor	8W-10-34
Left High Headlamp	8W-10-33
Left Liftgate Flood Lamp	8W-10-21
Left Mid Reading Lamp	8W-10-20, 21
Left Rear Reading Lamp	8W-10-20, 21
Left Visor/Vanity Mirror Lamps	8W-10-20
Low Beam Relay	8W-10-10, 32, 33, 34
Low Note Horn	8W-10-30
Memory Seat/Mirror Module	8W-10-11
Message Center	8W-10-11, 14, 33, 34
Name Brand Speaker Relay	8W-10-16
Park Lamp Relay	8W-10-8, 17
Passenger Door Courtesy Lamp	8W-10-21
Passenger Power Mirror	8W-10-12, 22
Power Distribution Center	8W-10-8, 9, 10, 11, 12, 13, 14, 15, 16, 17, 18, 19, 20, 23, 25, 26, 27, 28, 29, 30, 31, 32, 33, 34, 35
Power Mirror Fold Relay	8W-10-22
Power Mirror Switch	8W-10-20
Power Mirror Unfold Relay	8W-10-21, 22
Power Seat Circuit Breaker	8W-10-13
Powertrain Control Module	8W-10-16, 23, 25, 26, 27, 29
PTC 1 (JB)	8W-10-16, 26, 27, 29, 35
PTC 3 (JB)	8W-10-13
PTC 7 (JB)	8W-10-16, 31
PTC 8 (JB)	8W-10-16
PTC 9 (JB)	8W-10-16
Radiator Fan Relay	8W-10-15
Radiator Fan Relay No. 1	8W-10-25
Radiator Fan Relay No. 2	8W-10-15, 25
Radiator Fan Relay No. 3	8W-10-19, 25
Radio	8W-10-11
Rear Cigar Lighter/Power Outlet	8W-10-31
Rear Dome Lamp	8W-10-21
Rear Window Defogger	8W-10-12
Rear Window Defogger Relay	8W-10-12
Remote Keyless Entry Module	8W-10-11
Right Headlamp	8W-10-33, 34
Right Headlamp Leveling Motor	8W-10-34
Right High Headlamp	8W-10-33
Right Liftgate Flood Lamp	8W-10-21
Right Low Headlamp	8W-10-33
Right Mid Reading Lamp	8W-10-20, 21
Right Rear Reading Lamp	8W-10-20, 21
Right Visor/Vanity Mirror Lamps	8W-10-20
Sentry Key Immobilizer Module	8W-10-20
Stop Lamp Switch	8W-10-29
Transmission Control Module	8W-10-16, 28
Transmission Control Relay	8W-10-9, 28
Transmission Control Solenoids	8W-10-28
Universal Garage Door Opener	8W-10-20
Upstream Heated Oxygen Sensor	8W-10-23
Vehicle Speed Sensor	8W-10-27, 29
Washer Module	8W-10-13
Wiper High/Low Relay	8W-10-19
Wiper Module	8W-10-19
Wiper On Relay	8W-10-8, 19

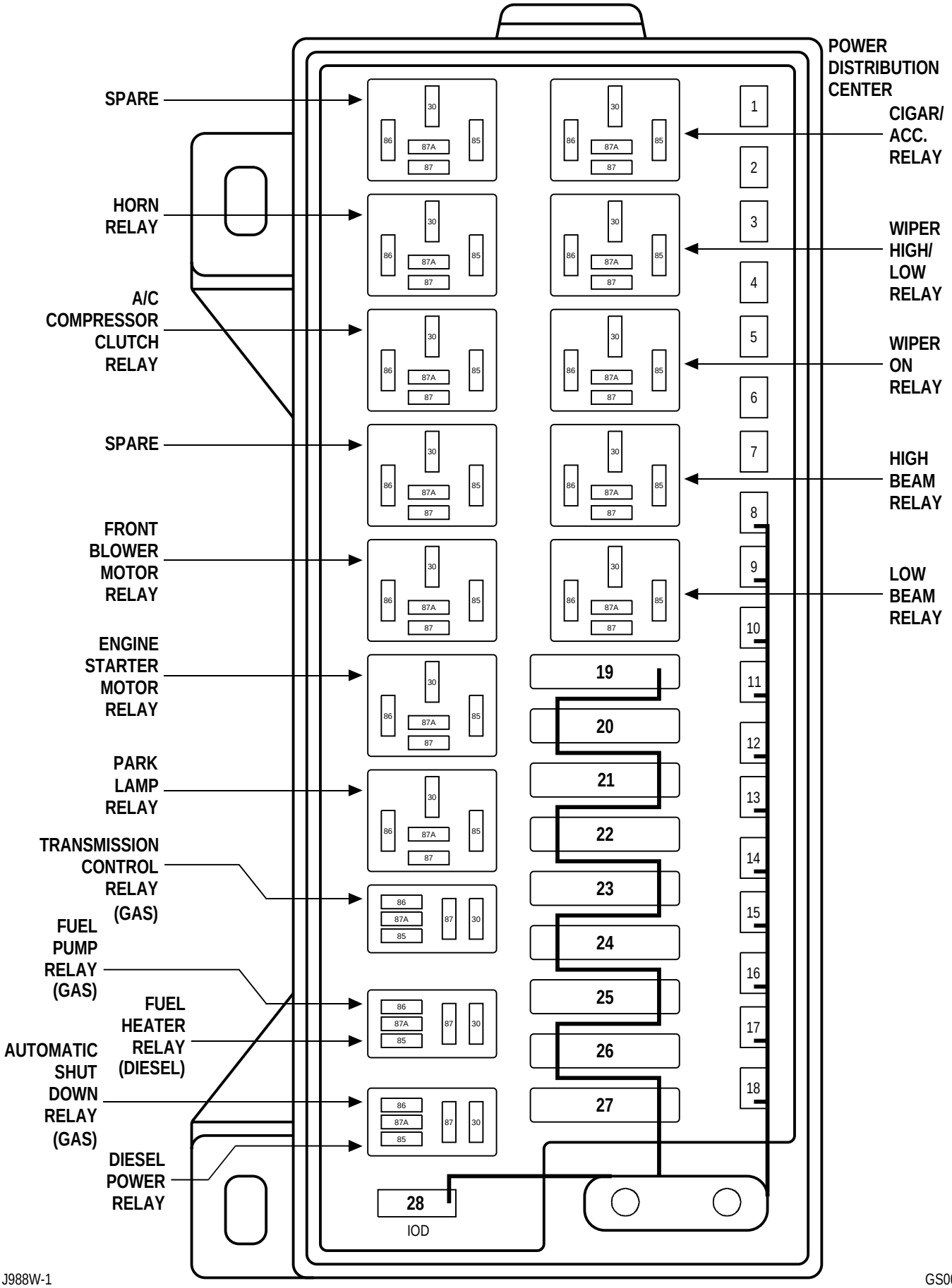
POWER DISTRIBUTION CENTER
SPARE
HORN RELAY
A/C COMPRESSOR CLUTCH RELAY
SPARE
FRONT BLOWER MOTOR RELAY
ENGINE STARTER MOTOR RELAY
PARK LAMP RELAY
TRANSMISSION CONTROL RELAY (GAS)
FUEL PUMP RELAY (GAS)
FUEL HEATER RELAY (DIESEL)
AUTOMATIC SHUT DOWN RELAY (GAS)
DIESEL POWER RELAY
CIGAR/ ACC. RELAY
WIPER HIGH/ LOW RELAY
WIPER ON RELAY
HIGH BEAM RELAY
LOW BEAM RELAY
30
86
87A
85
87
1
2
3
4
5
6
7
8
9
10
11
12
13
14
15
16
17
18
19
20
21
22
23
24
25
26
27
28
IOD

FUSES

FUSE NO.	AMPS	FUSED CIRCUIT	FEED CIRCUIT
1	10A	F23 18DB/YL ● F23 20DB/YL ● ●	A22 12BK/OR
2	10A	F14 18LG/YL ● F14 20LG/YL ● ●	F87 18WT/BK
3	-	SPARE	A0 6RD
4	10A	L33 20RD	INTERNAL
5	10A	L34 20RD/OR L34 20RD/OR	
6	20A	L43 18VT	INTERNAL
7	15A	L44 20VT/RD	
8	20A	INTERNAL	A0 6RD
9	20A	INTERNAL	A0 6RD
10	20A	L9 18BK/WT	A0 6RD
11	15A	INTERNAL	A0 6RD
12	25A	A20 12RD/DB	A0 6RD
13	20A	F32 18PK/DB	A0 6RD
14	-	SPARE	A0 6RD
15*	20A	A5 18RD/DB INTERNAL	A0 6RD
16	20A	A14 18RD/WT* INTERNAL	A0 6RD
17	20A	INTERNAL	A0 6RD
18	15A	F41 20PK/VT	A0 6RD
19	30A	INTERNAL	A0 6RD
20**	40A	A17 12RD/BK	A0 6RD
21	40A	INTERNAL	A0 6RD
22	40A	INTERNAL	A0 6RD
23	40A	A1 12RD INTERNAL	A0 6RD
24	40A	A16 12GY	A0 6RD
25	40A	A10 12RD/DG	A0 6RD
26	40A	A2 12PK/BK	A0 6RD
27	40A	A4 12BK/RD	A0 6RD
28	10A	M1 20PK	A0 6RD

* GAS
** DIESEL
● BUILT-UP-EXPORT
● ● EXCEPT BUILT-UP-EXPORT

A/C COMPRESSOR CLUTCH RELAY

CAVITY	CIRCUIT	FUNCTION
30	INTERNAL	FUSED B (+)
85	C13 18DB/OR*	A/C COMPRESSOR CLUTCH RELAY CONTROL
85	C13 20DB/OR**	A/C COMPRESSOR CLUTCH RELAY CONTROL
86	F87 18WT/BK*	FUSED IGNITION (ST-RUN)
86	A142 18DG/OR**	FUSED IGNITION (ST-RUN)
87	C3 18DB/BK	A/C COMPRESSOR CLUTCH RELAY OUTPUT
87A	-	-

AUTOMATIC SHUT DOWN RELAY (GAS)

CAVITY	CIRCUIT	FUNCTION
30	INTERNAL	FUSED B (+)
85	K51 18DB/YL	AUTOMATIC SHUTDOWN RELAY CONTROL
86	A0 6RD	B (+)
87	A142 18DG/OR	ASD RELAY OUTPUT
87A	-	-

CIGAR/ACCESSORY RELAY

CAVITY	CIRCUIT	FUNCTION
30	INTERNAL	FUSED B (+)
85	Z1 18BK	GROUND
86	F1 20DB	FUSED IGNITION (RUN-ACC)
87	F30 16RD	CIGAR/ACCESSORY RELAY OUTPUT
87A	-	-

DIESEL POWER RELAY

CAVITY	CIRCUIT	FUNCTION
30	INTERNAL	FUSED B (+)
85	K51 20DB/YL	DIESEL POWER RELAY CONTROL
86	A0 6RD	B (+)
87	A142 18DG/OR	DIESEL POWER RELAY OUTPUT
87A	-	-

*GAS
**DIESEL

ENGINE STARTER MOTOR RELAY

CAVITY	CIRCUIT	FUNCTION
30	INTERNAL	FUSED B (+)
85	K90 18TN	ENGINE STARTER MOTOR RELAY CONTROL
86	F45 18YL/RD ■	FUSED IGNITION (ST)
86	T141 20YL/RD ■■	FUSED IGNITION (ST)
87	T40 12BR	ENGINE STARTER MOTOR RELAY OUTPUT
87A	-	-

FRONT BLOWER MOTOR RELAY

CAVITY	CIRCUIT	FUNCTION
30	INTERNAL	FUSED B (+)
85	Z1 18BK	GROUND
86	F20 20WT	FUSED IGNITION (RUN)
87	C71 12DB	FRONT BLOWER MOTOR RELAY OUTPUT
87A	-	-

FUEL HEATER RELAY (DIESEL)

CAVITY	CIRCUIT	FUNCTION
30	INTERNAL	FUSED B (+)
85	Z1 20BK	GROUND
86	INTERNAL	FUSED IGNITION (ST-RUN)
87	A141 16DG/WT	FUEL HEATER RELAY OUTPUT
87A	-	-

FUEL PUMP RELAY (GAS)

CAVITY	CIRCUIT	FUNCTION
30	INTERNAL	FUSED B (+)
85	K31 18BR	FUEL PUMP RELAY CONTROL
86	F87 18 WT/BK	FUSED IGNITION (ST-RUN)
87	A141 16DG/WT	FUEL PUMP RELAY OUTPUT
87A	-	-

■ EATX
■■ MTX

HIGH BEAM RELAY

CAVITY	CIRCUIT	FUNCTION
30	A0 6RD	B (+)
85	L324 20WT/LG	HIGH BEAM RELAY CONTROL
86	A0 6RD	B (+)
87	INTERNAL	HIGH BEAM RELAY OUTPUT
87A	-	-

HORN RELAY

CAVITY	CIRCUIT	FUNCTION
30	INTERNAL	FUSED B (+)
85	X4 20GY/OR	HORN RELAY CONTROL
86	A0 6RD	B (+)
87	X2 18DG/RD	HORN RELAY OUTPUT
87A	-	-

LOW BEAM RELAY

CAVITY	CIRCUIT	FUNCTION
30	A0 6RD	B (+)
85	L94 20OR/WT	LOW BEAM RELAY CONTROL
85	L193 20OR/WT *	LOW BEAM RELAY CONTROL
86	A0 6RD	B (+)
87	INTERNAL	LOW BEAM RELAY OUTPUT
87A	-	-

PARK LAMP RELAY

CAVITY	CIRCUIT	FUNCTION
30	INTERNAL	FUSED B (+)
85	L97 18PK/DB	PARK LAMP RELAY CONTROL
86	INTERNAL	FUSED B (+)
87	L7 12BK/YL	PARK LAMP RELAY OUTPUT
87A	-	-

* CHRYSLER

TRANSMISSION CONTROL RELAY (GAS)

CAVITY	CIRCUIT	FUNCTION
30	INTERNAL	FUSED B (+)
85	Z16 18BK	GROUND
86	T15 18LG	12 V SUPPLY
87	T16 18RD	TRANSMISSION CONTROL RELAY OUTPUT
87A	-	-

WIPER HIGH/LOW RELAY

CAVITY	CIRCUIT	FUNCTION
30	INTERNAL	WIPER ON RELAY OUTPUT
85	V16 20WT	WIPER HIGH/LOW RELAY CONTROL
86	INTERNAL	WIPER ON RELAY OUTPUT
87	V4 12RD/YL	WIPER HIGH/LOW RELAY OUTPUT (HIGH)
87A	V3 12BR/WT	WIPER HIGH/LOW RELAY OUTPUT (LOW)

WIPER ON RELAY

CAVITY	CIRCUIT	FUNCTION
30	INTERNAL	WIPER ON RELAY OUTPUT
85	V14 18RD/VT	WIPER ON RELAY CONTROL
86	INTERNAL	FUSED B(+)
87	INTERNAL	FUSED B(+)
87A	Z1 18BK	GROUND

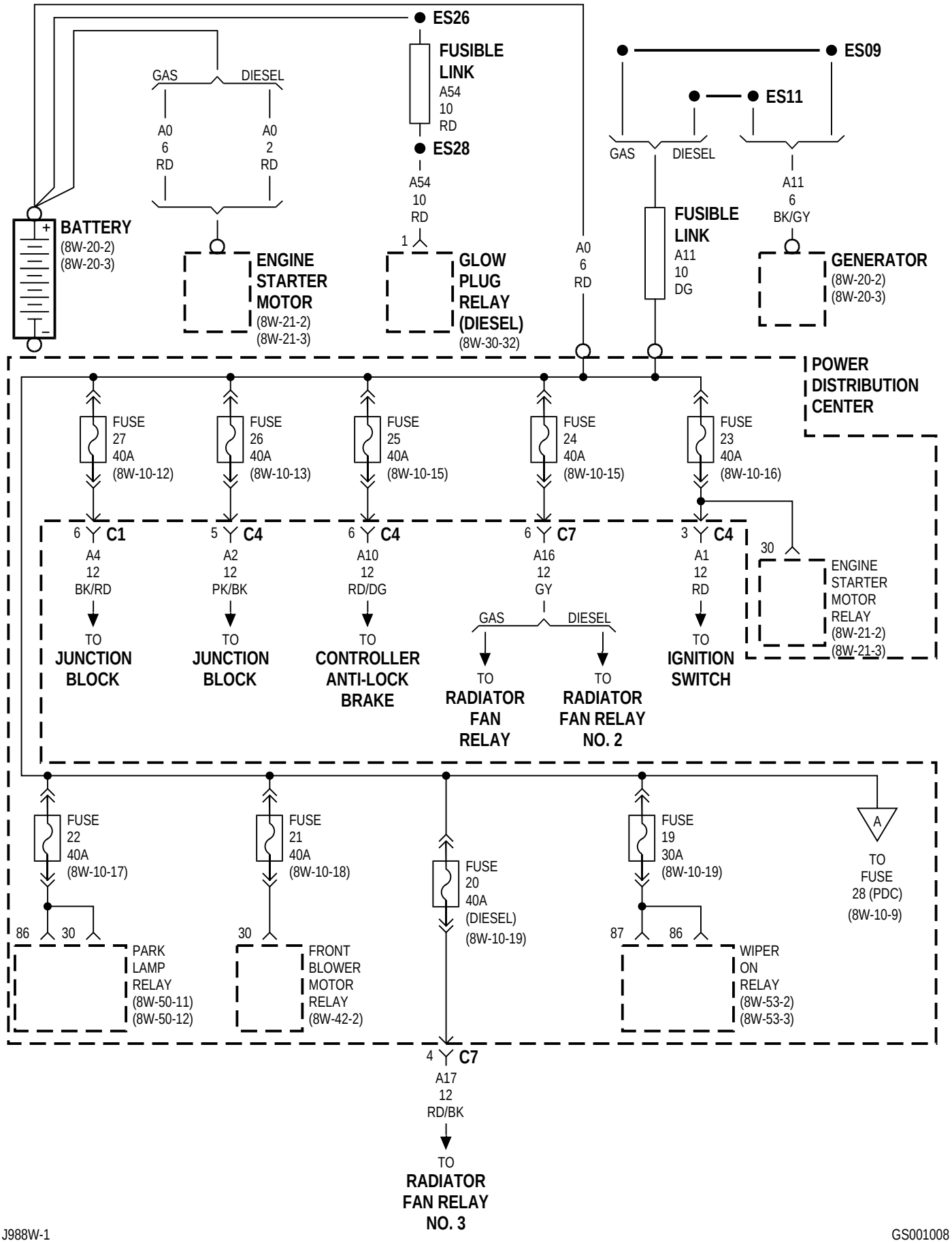
ES26
FUSIBLE LINK
A54
10
RD
ES09
ES11
GAS
DIESEL
A0
6
RD
A0
2
RD
ES28
A54
10
RD
1
A11
6
BK/GY
BATTERY
(8W-20-2)
(8W-20-3)
ENGINE STARTER MOTOR
(8W-21-2)
(8W-21-3)
GLOW PLUG RELAY (DIESEL)
(8W-30-32)
A0
6
RD
FUSIBLE LINK
A11
10
DG
GENERATOR
(8W-20-2)
(8W-20-3)
POWER DISTRIBUTION CENTER
FUSE 27 40A (8W-10-12)
FUSE 26 40A (8W-10-13)
FUSE 25 40A (8W-10-15)
FUSE 24 40A (8W-10-15)
FUSE 23 40A (8W-10-16)
6 C1
A4
12
BK/RD
5 C4
A2
12
PK/BK
6 C4
A10
12
RD/DG
6 C7
A16
12
GY
3 C4
A1
12
RD
30
ENGINE STARTER MOTOR RELAY
(8W-21-2)
(8W-21-3)
TO JUNCTION BLOCK
TO JUNCTION BLOCK
TO CONTROLLER ANTI-LOCK BRAKE
GAS
DIESEL
TO RADIATOR FAN RELAY
TO RADIATOR FAN RELAY NO. 2
TO IGNITION SWITCH
FUSE 22 40A (8W-10-17)
FUSE 21 40A (8W-10-18)
FUSE 20 40A (DIESEL) (8W-10-19)
FUSE 19 30A (8W-10-19)
A
TO FUSE 28 (PDC) (8W-10-9)
86
30
PARK LAMP RELAY
(8W-50-11)
(8W-50-12)
30
FRONT BLOWER MOTOR RELAY
(8W-42-2)
87
86
WIPER ON RELAY
(8W-53-2)
(8W-53-3)
4 C7
A17
12
RD/BK
TO RADIATOR FAN RELAY NO. 3

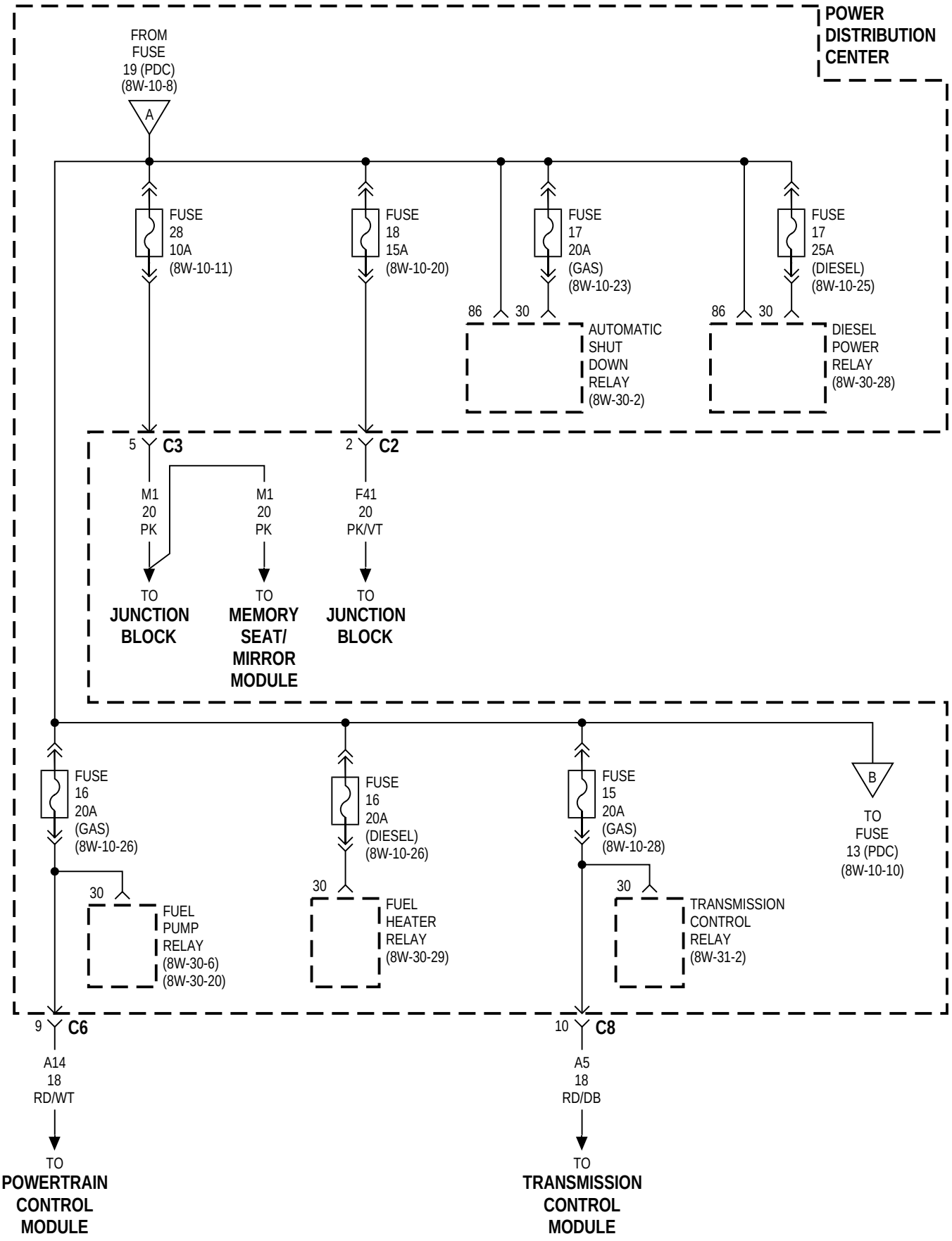
POWER DISTRIBUTION CENTER
FROM FUSE 19 (PDC) (8W-10-8)
A
FUSE 28 10A (8W-10-11)
FUSE 18 15A (8W-10-20)
FUSE 17 20A (GAS) (8W-10-23)
FUSE 17 25A (DIESEL) (8W-10-25)
86
30
AUTOMATIC SHUT DOWN RELAY (8W-30-2)
DIESEL POWER RELAY (8W-30-28)
5 C3
2 C2
M1 20 PK
M1 20 PK
F41 20 PK/VT
TO JUNCTION BLOCK
TO MEMORY SEAT/ MIRROR MODULE
TO JUNCTION BLOCK
FUSE 16 20A (GAS) (8W-10-26)
FUSE 16 20A (DIESEL) (8W-10-26)
FUSE 15 20A (GAS) (8W-10-28)
B
TO FUSE 13 (PDC) (8W-10-10)
FUEL PUMP RELAY (8W-30-6) (8W-30-20)
FUEL HEATER RELAY (8W-30-29)
TRANSMISSION CONTROL RELAY (8W-31-2)
9 C6
10 C8
A14 18 RD/WT
A5 18 RD/DB
TO POWERTRAIN CONTROL MODULE
TO TRANSMISSION CONTROL MODULE

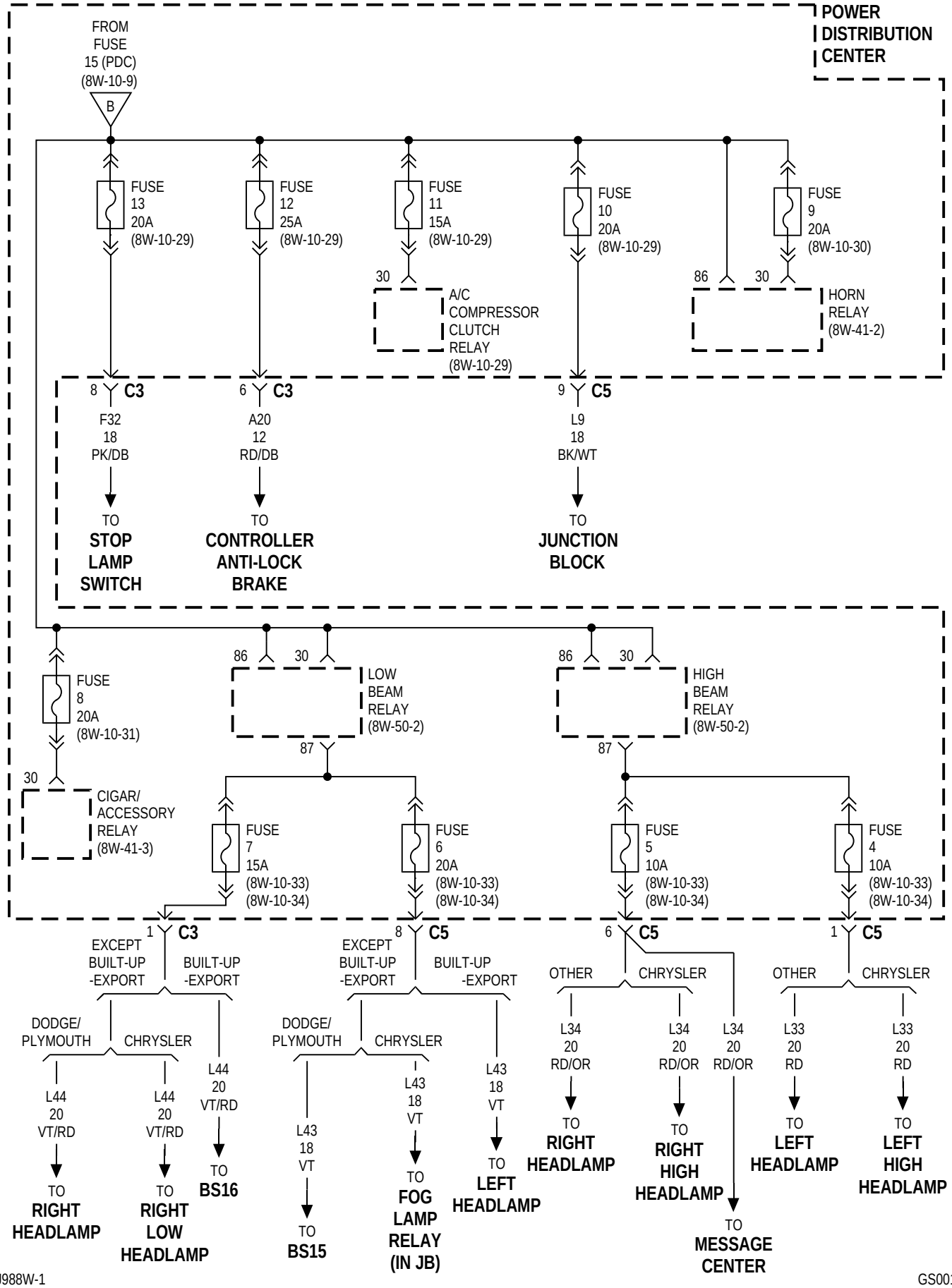

J988W-1

GS001010

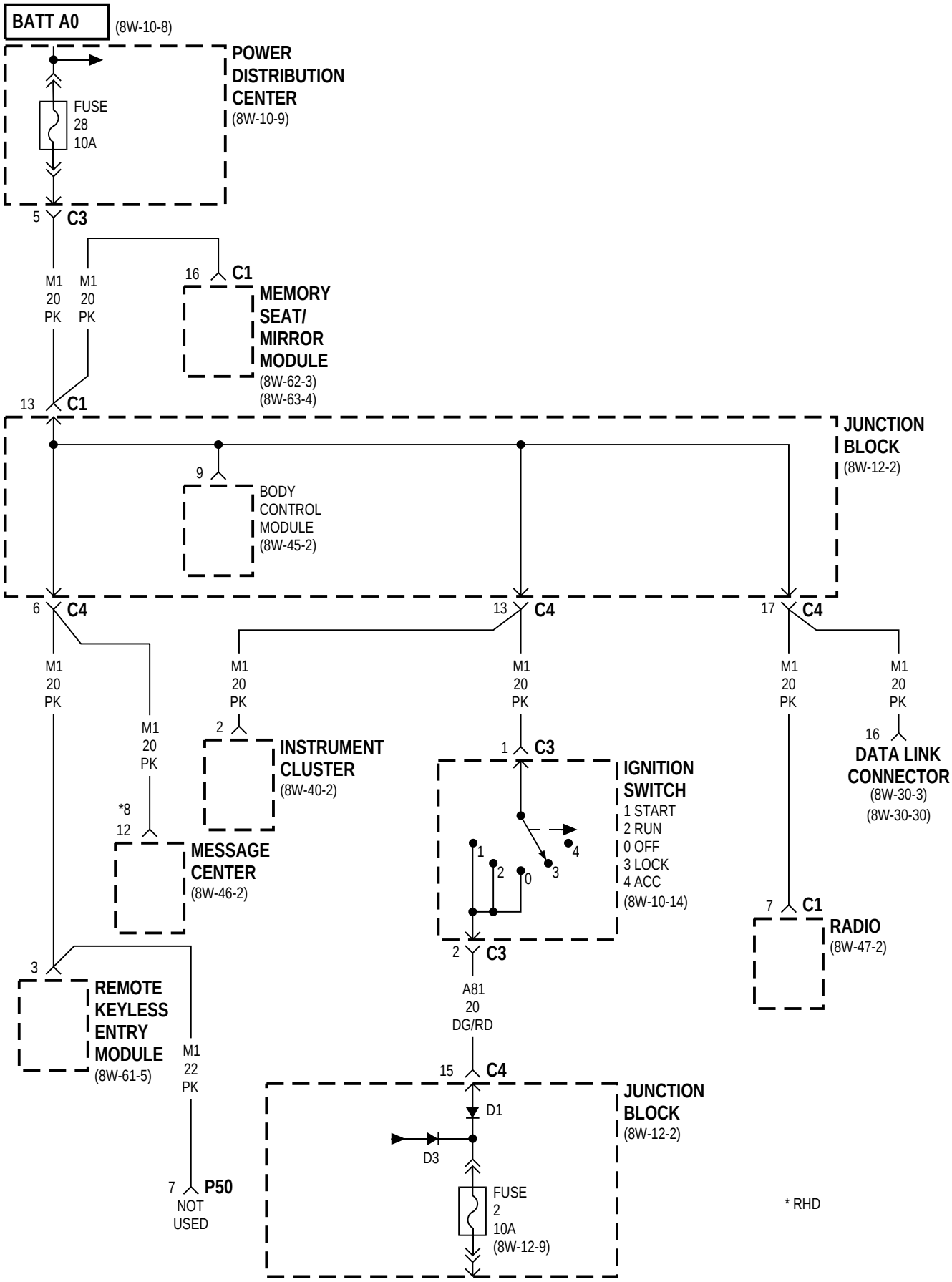
BATT A0
(8W-10-8)
POWER DISTRIBUTION CENTER
(8W-10-9)
FUSE 28 10A
5 C3
M1 20 PK
M1 20 PK
16 C1
MEMORY SEAT/ MIRROR MODULE
(8W-62-3)
(8W-63-4)
13 C1
JUNCTION BLOCK
(8W-12-2)
9
BODY CONTROL MODULE
(8W-45-2)
6 C4
13 C4
17 C4
M1 20 PK
2
INSTRUMENT CLUSTER
(8W-40-2)
*8
12
MESSAGE CENTER
(8W-46-2)
1 C3
IGNITION SWITCH
1 START
2 RUN
0 OFF
3 LOCK
4 ACC
(8W-10-14)
2 C3
A81 20 DG/RD
16
DATA LINK CONNECTOR
(8W-30-3)
(8W-30-30)
7 C1
RADIO
(8W-47-2)
3
REMOTE KEYLESS ENTRY MODULE
(8W-61-5)
M1 22 PK
7 P50
NOT USED
15 C4
D1
D3
FUSE 2 10A
(8W-12-9)
* RHD

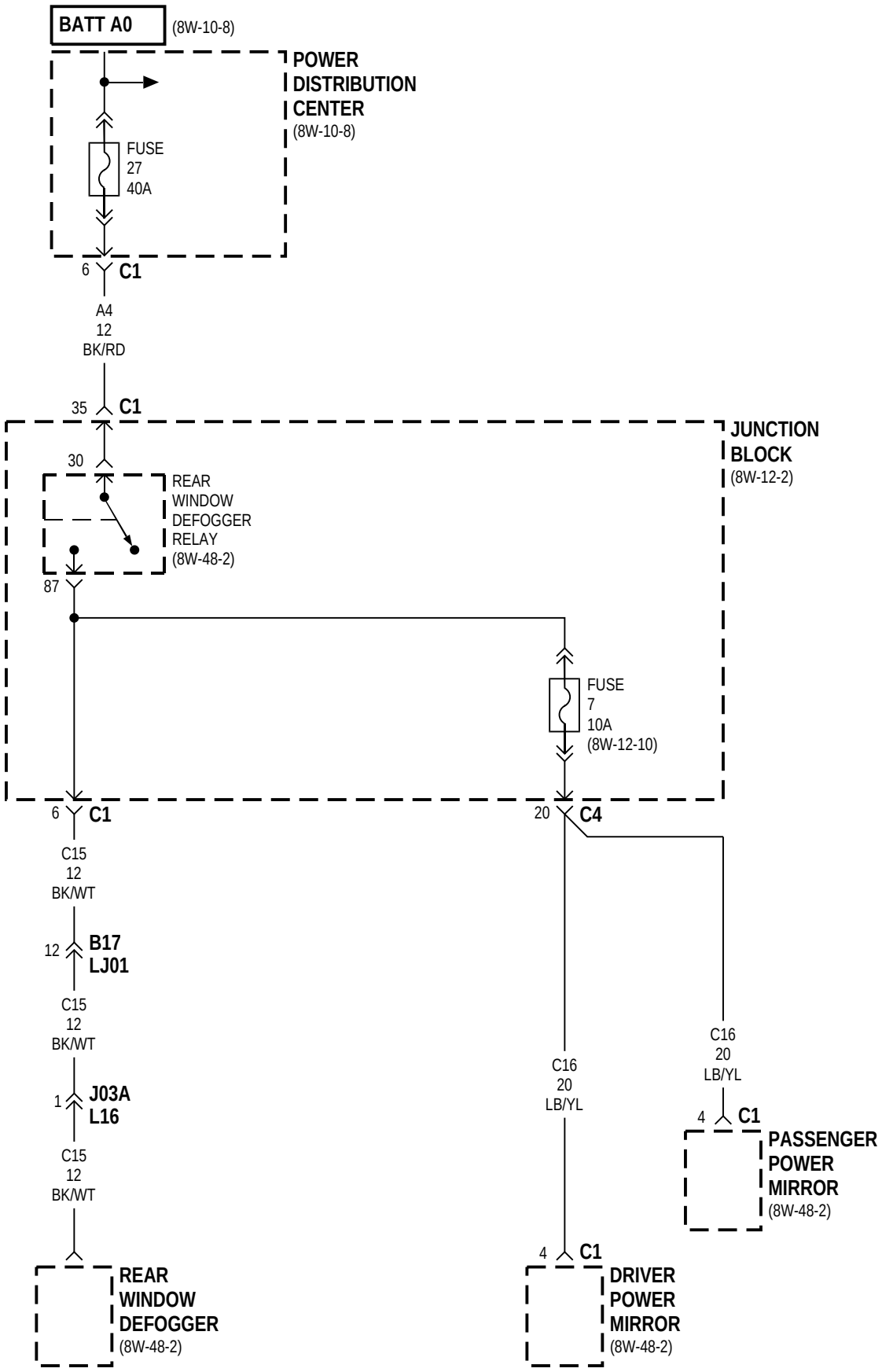
BATT A0
(8W-10-8)
POWER DISTRIBUTION CENTER
(8W-10-8)
FUSE 27 40A
6 C1
A4 12 BK/RD
35 C1
JUNCTION BLOCK
(8W-12-2)
30
REAR WINDOW DEFOGGER RELAY
(8W-48-2)
87
FUSE 7 10A
(8W-12-10)
6 C1
20 C4
C15 12 BK/WT
12 B17 LJ01
C15 12 BK/WT
1 J03A L16
C15 12 BK/WT
REAR WINDOW DEFOGGER
(8W-48-2)
C16 20 LB/YL
4 C1
DRIVER POWER MIRROR
(8W-48-2)
C16 20 LB/YL
4 C1
PASSENGER POWER MIRROR
(8W-48-2)

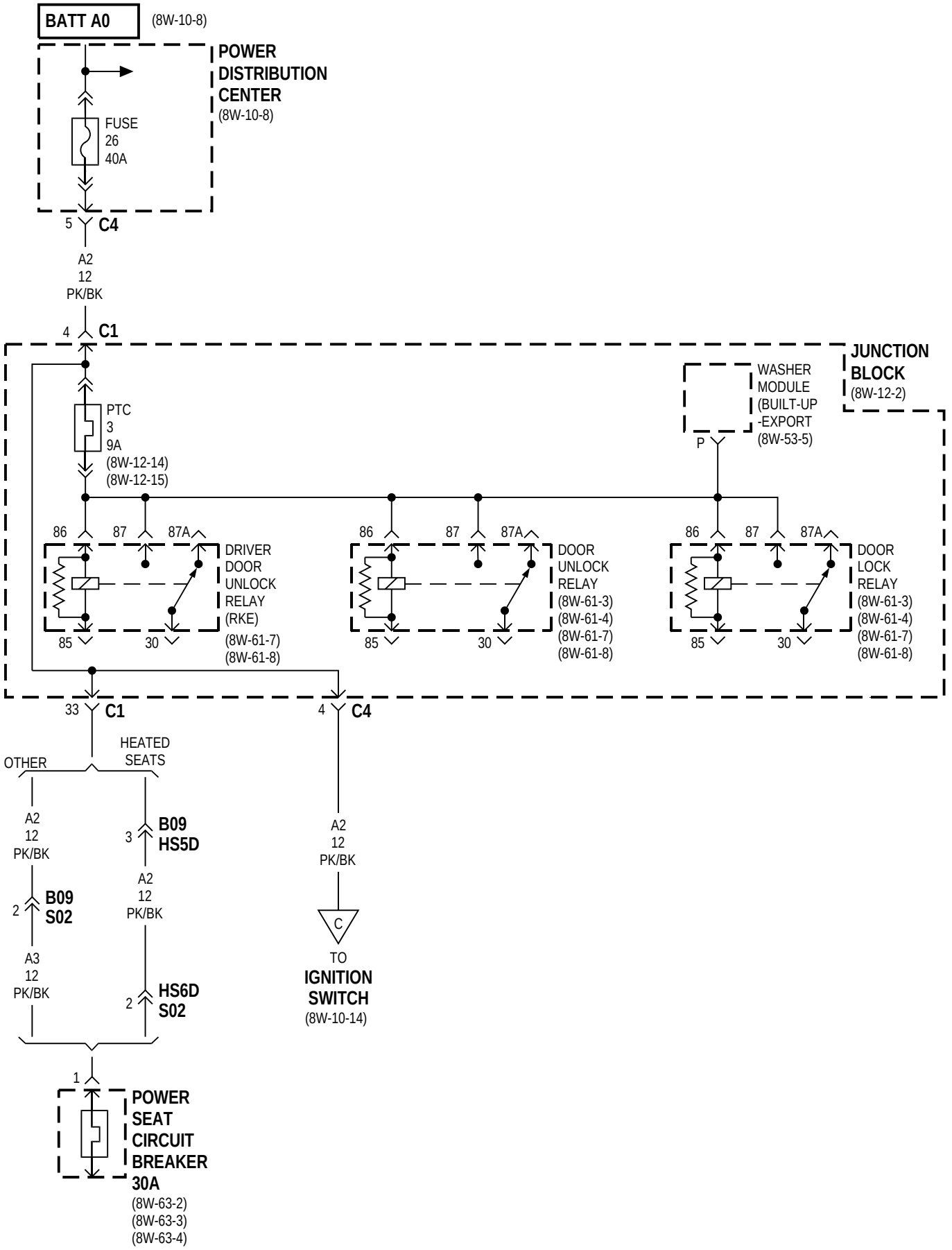
BATT A0
(8W-10-8)
POWER DISTRIBUTION CENTER
(8W-10-8)
FUSE 26 40A
5 C4
A2 12 PK/BK
4 C1
JUNCTION BLOCK
(8W-12-2)
PTC 3 9A
(8W-12-14)
(8W-12-15)
WASHER MODULE (BUILT-UP -EXPORT
(8W-53-5)
P
86 87 87A
DRIVER DOOR UNLOCK RELAY (RKE)
(8W-61-7)
(8W-61-8)
85 30
DOOR UNLOCK RELAY
(8W-61-3)
(8W-61-4)
(8W-61-7)
(8W-61-8)
DOOR LOCK RELAY
(8W-61-3)
(8W-61-4)
(8W-61-7)
(8W-61-8)
33 C1
4 C4
OTHER
HEATED SEATS
A2 12 PK/BK
B09 S02
A3 12 PK/BK
B09 HS5D
HS6D S02
C
TO IGNITION SWITCH
(8W-10-14)
1
POWER SEAT CIRCUIT BREAKER 30A
(8W-63-2)
(8W-63-3)
(8W-63-4)

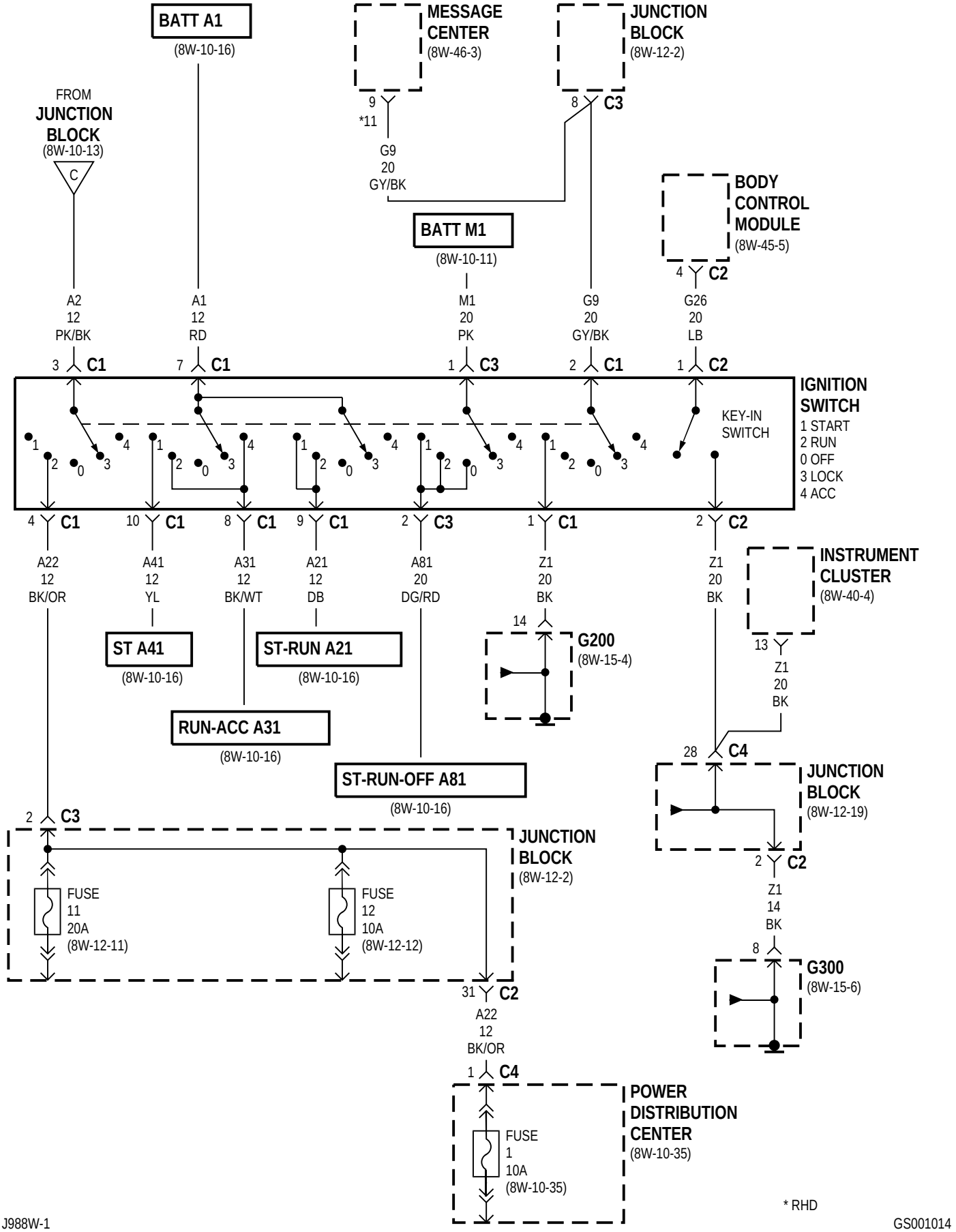
BATT A1
(8W-10-16)
MESSAGE CENTER
(8W-46-3)
JUNCTION BLOCK
(8W-12-2)
FROM JUNCTION BLOCK
(8W-10-13)
C
9
*11
G9
20
GY/BK
8
C3
BODY CONTROL MODULE
(8W-45-5)
4
C2
BATT M1
(8W-10-11)
A2
12
PK/BK
A1
12
RD
M1
20
PK
G9
20
GY/BK
G26
20
LB
3
C1
7
C1
1
C3
2
C1
1
C2
IGNITION SWITCH
KEY-IN SWITCH
1 START
2 RUN
0 OFF
3 LOCK
4 ACC
4
C1
10
C1
8
C1
9
C1
2
C3
1
C1
2
C2
A22
12
BK/OR
A41
12
YL
A31
12
BK/WT
A21
12
DB
A81
20
DG/RD
Z1
20
BK
Z1
20
BK
INSTRUMENT CLUSTER
(8W-40-4)
14
G200
(8W-15-4)
13
Z1
20
BK
ST A41
(8W-10-16)
ST-RUN A21
(8W-10-16)
RUN-ACC A31
(8W-10-16)
ST-RUN-OFF A81
(8W-10-16)
28
C4
JUNCTION BLOCK
(8W-12-19)
2
C2
Z1
14
BK
8
G300
(8W-15-6)
2
C3
JUNCTION BLOCK
(8W-12-2)
FUSE
11
20A
(8W-12-11)
FUSE
12
10A
(8W-12-12)
31
C2
A22
12
BK/OR
1
C4
POWER DISTRIBUTION CENTER
(8W-10-35)
FUSE
1
10A
(8W-10-35)
* RHD

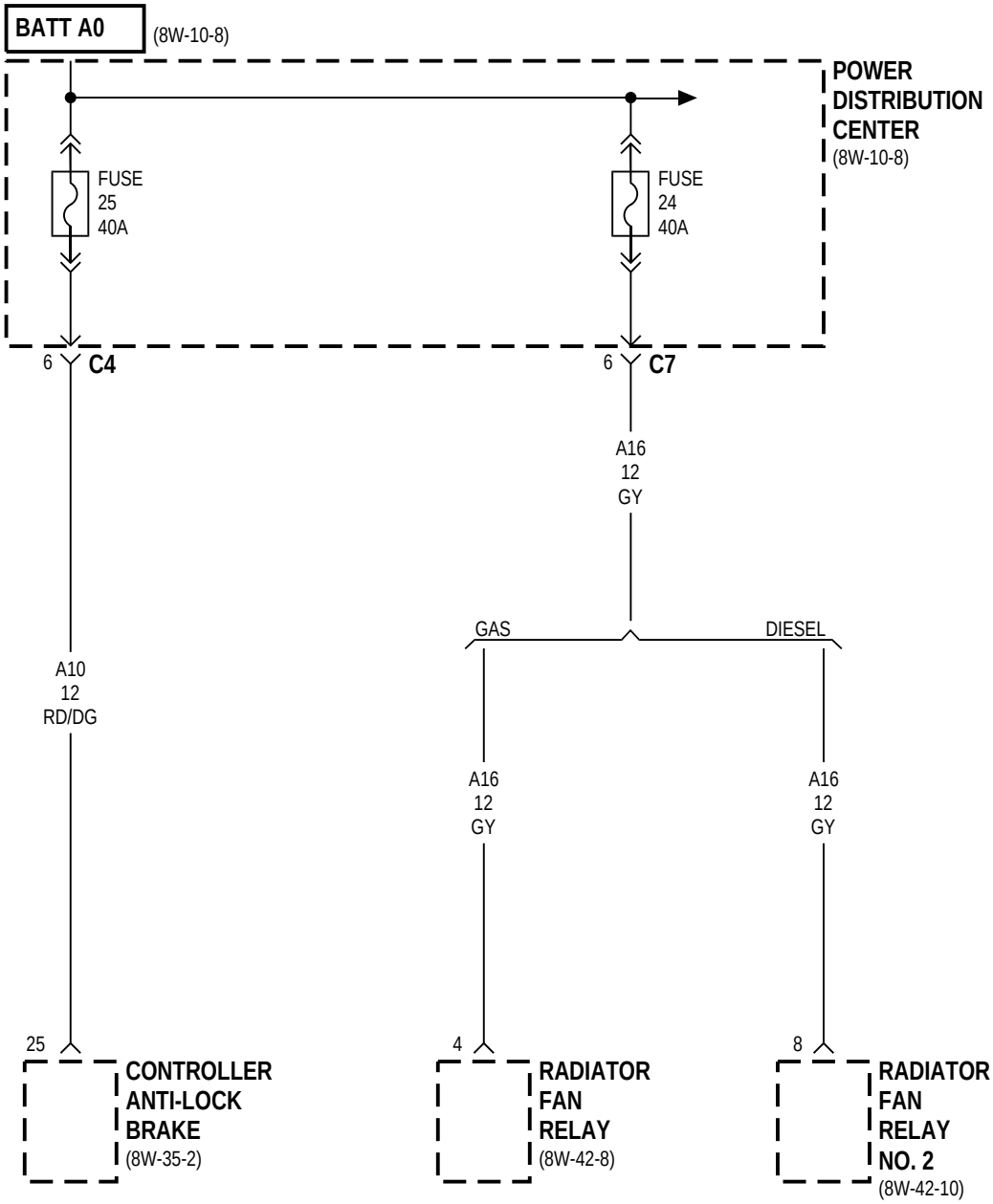
BATT A0
(8W-10-8)
POWER DISTRIBUTION CENTER
(8W-10-8)
FUSE 25 40A
FUSE 24 40A
6 C4
6 C7
A16 12 GY
GAS
DIESEL
A10 12 RD/DG
A16 12 GY
A16 12 GY
25
CONTROLLER ANTI-LOCK BRAKE
(8W-35-2)
4
RADIATOR FAN RELAY
(8W-42-8)
8
RADIATOR FAN RELAY NO. 2
(8W-42-10)

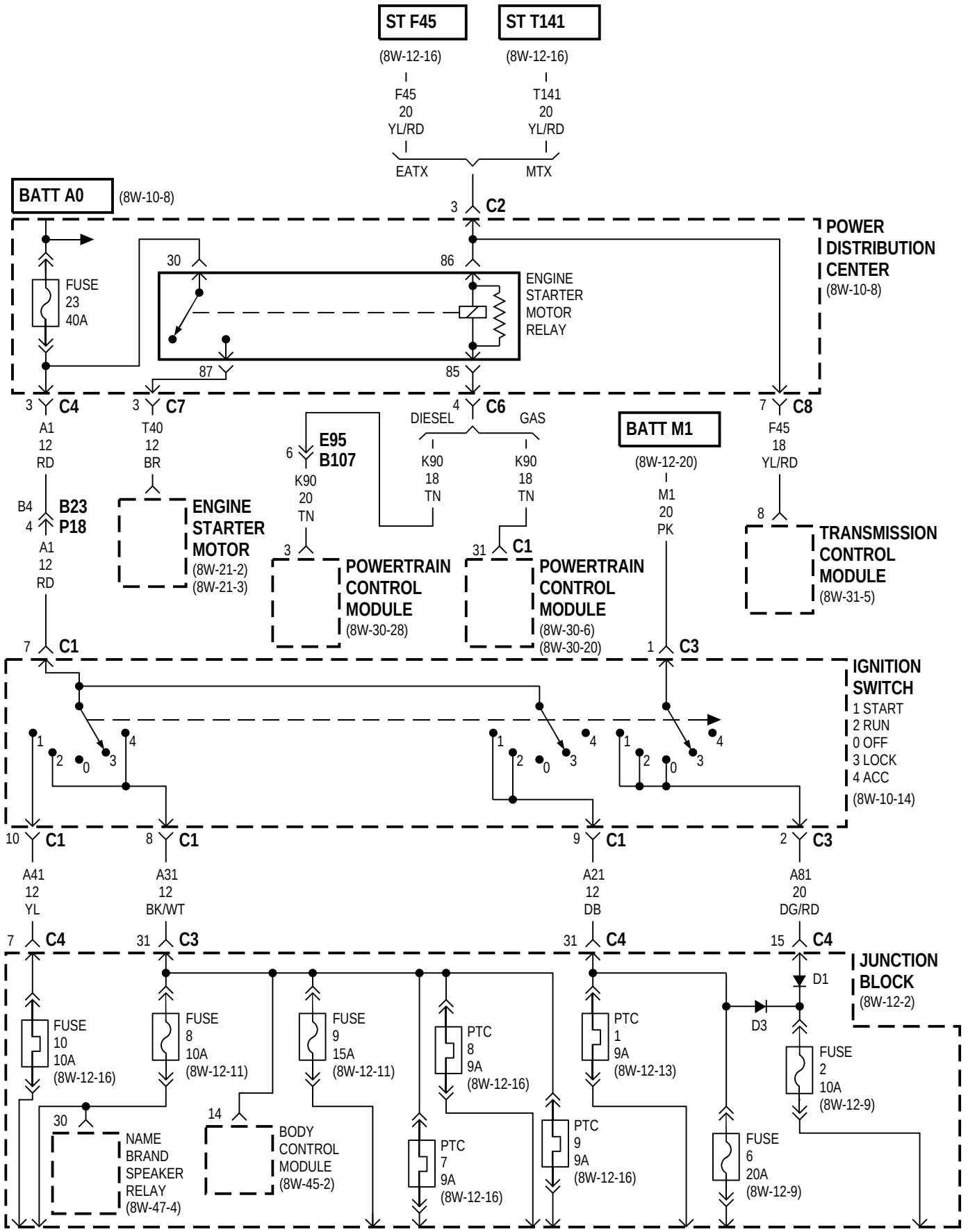
ST F45
ST T141
(8W-12-16)
(8W-12-16)
F45
20
YL/RD
T141
20
YL/RD
EATX
MTX
BATT A0
(8W-10-8)
3 C2
POWER DISTRIBUTION CENTER
(8W-10-8)
FUSE
23
40A
30
86
ENGINE STARTER MOTOR RELAY
87
85
3 C4
A1
12
RD
3 C7
T40
12
BR
4 C6
DIESEL
GAS
7 C8
F45
18
YL/RD
6 E95
B107
K90
20
TN
K90
18
TN
K90
18
TN
BATT M1
(8W-12-20)
M1
20
PK
B4
4 B23
P18
A1
12
RD
ENGINE STARTER MOTOR
(8W-21-2)
(8W-21-3)
8
TRANSMISSION CONTROL MODULE
(8W-31-5)
3
POWERTRAIN CONTROL MODULE
(8W-30-28)
31 C1
POWERTRAIN CONTROL MODULE
(8W-30-6)
(8W-30-20)
7 C1
1 C3
IGNITION SWITCH
1 START
2 RUN
0 OFF
3 LOCK
4 ACC
(8W-10-14)
10 C1
8 C1
9 C1
2 C3
A41
12
YL
A31
12
BK/WT
A21
12
DB
A81
20
DG/RD
7 C4
31 C3
31 C4
15 C4
JUNCTION BLOCK
(8W-12-2)
D1
D3
FUSE
10
10A
(8W-12-16)
FUSE
8
10A
(8W-12-11)
FUSE
9
15A
(8W-12-11)
PTC
8
9A
(8W-12-16)
PTC
1
9A
(8W-12-13)
FUSE
2
10A
(8W-12-9)
30
NAME BRAND SPEAKER RELAY
(8W-47-4)
14
BODY CONTROL MODULE
(8W-45-2)
PTC
7
9A
(8W-12-16)
PTC
9
9A
(8W-12-16)
FUSE
6
20A
(8W-12-9)

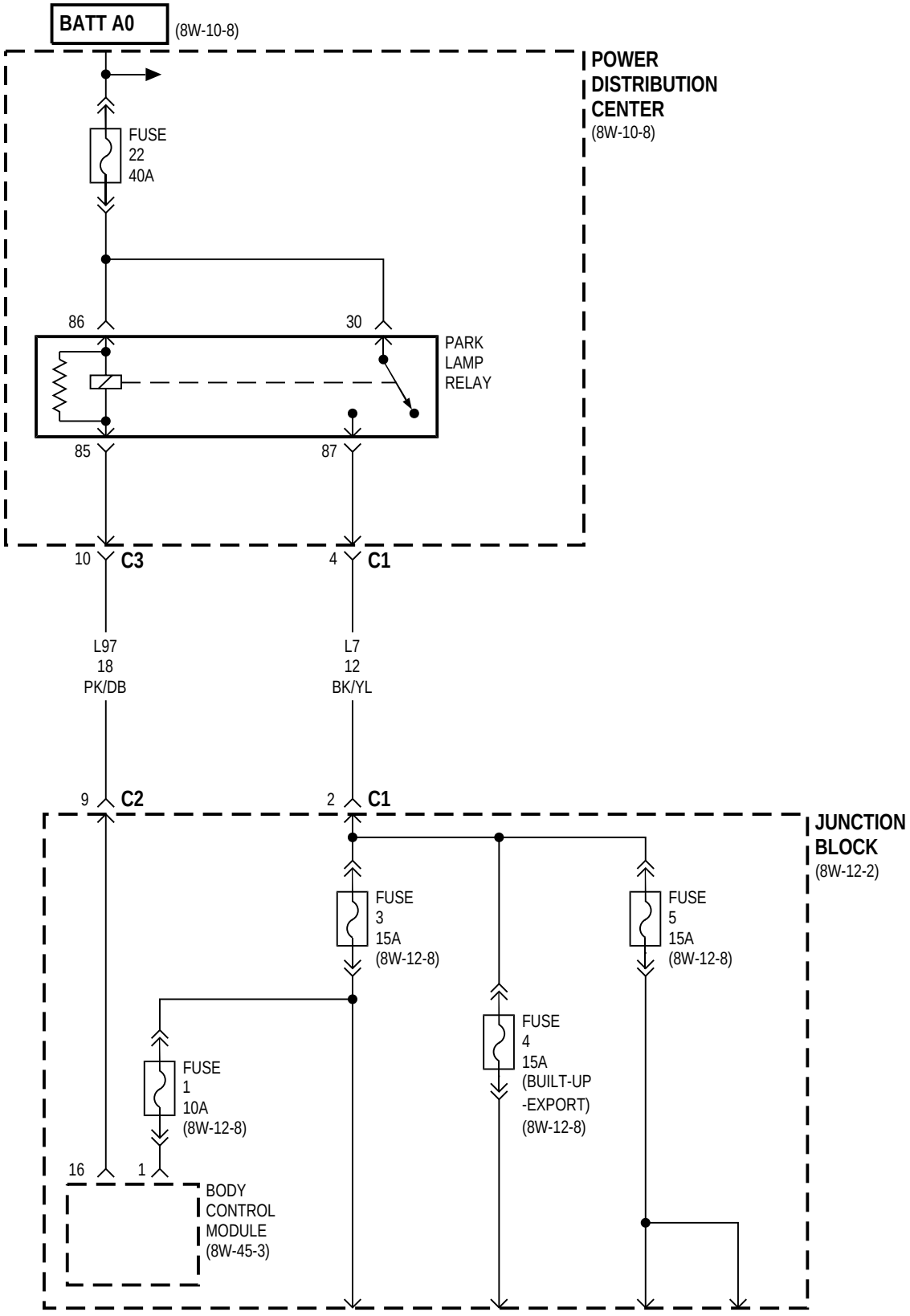
BATT A0
(8W-10-8)
POWER
DISTRIBUTION
CENTER
(8W-10-8)
FUSE
22
40A
86
30
PARK
LAMP
RELAY
85
87
10
C3
4
C1
L97
18
PK/DB
L7
12
BK/YL
9
C2
2
C1
JUNCTION
BLOCK
(8W-12-2)
FUSE
3
15A
(8W-12-8)
FUSE
5
15A
(8W-12-8)
FUSE
1
10A
(8W-12-8)
FUSE
4
15A
(BUILT-UP
-EXPORT)
(8W-12-8)
16
1
BODY
CONTROL
MODULE
(8W-45-3)

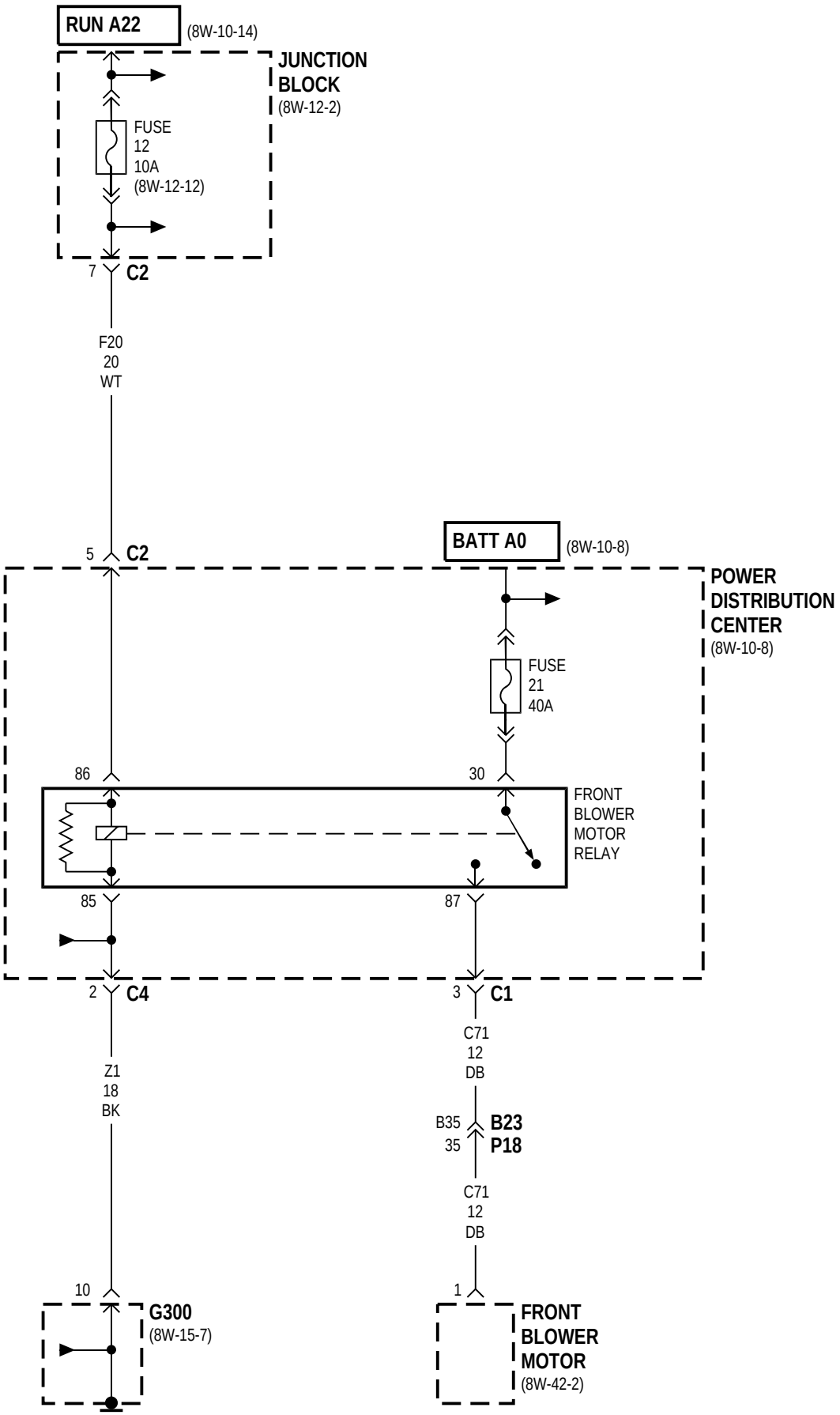
RUN A22
(8W-10-14)
JUNCTION BLOCK
(8W-12-2)
FUSE
12
10A
(8W-12-12)
7
C2
F20
20
WT
5
C2
BATT A0
(8W-10-8)
POWER DISTRIBUTION CENTER
(8W-10-8)
FUSE
21
40A
86
30
FRONT BLOWER MOTOR RELAY
85
87
2
C4
3
C1
Z1
18
BK
C71
12
DB
B35
35
B23
P18
C71
12
DB
10
G300
(8W-15-7)
1
FRONT BLOWER MOTOR
(8W-42-2)

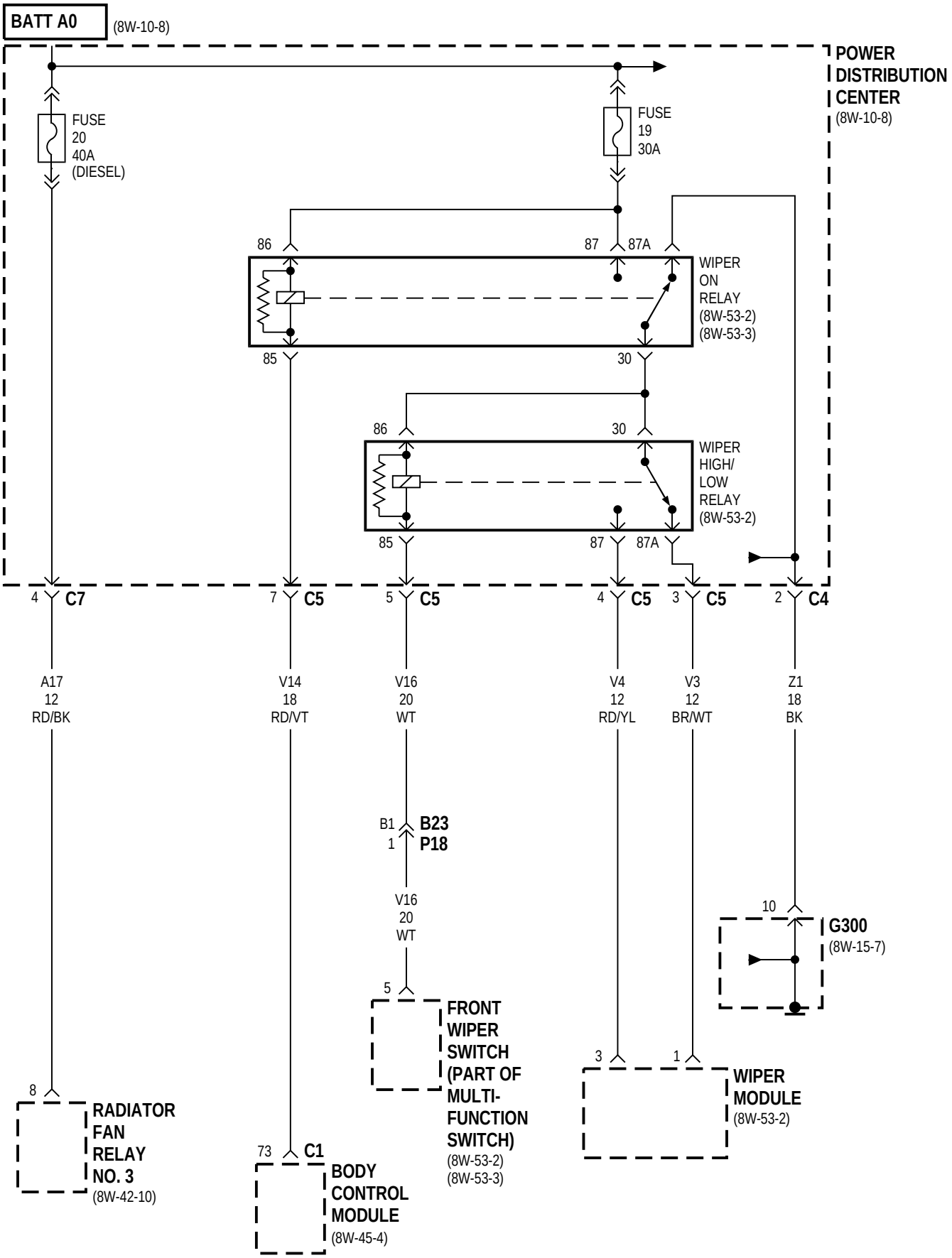
BATT A0
(8W-10-8)
POWER DISTRIBUTION CENTER
(8W-10-8)
FUSE 20 40A (DIESEL)
FUSE 19 30A
86
87
87A
WIPER ON RELAY
(8W-53-2)
(8W-53-3)
85
30
86
30
WIPER HIGH/ LOW RELAY
(8W-53-2)
85
87
87A
4 C7
7 C5
5 C5
4 C5
3 C5
2 C4
A17 12 RD/BK
V14 18 RD/VT
V16 20 WT
V4 12 RD/YL
V3 12 BR/WT
Z1 18 BK
B1 1 B23 P18
V16 20 WT
5
FRONT WIPER SWITCH (PART OF MULTI-FUNCTION SWITCH)
(8W-53-2)
(8W-53-3)
10
G300
(8W-15-7)
3
1
WIPER MODULE
(8W-53-2)
8
RADIATOR FAN RELAY NO. 3
(8W-42-10)
73 C1
BODY CONTROL MODULE
(8W-45-4)

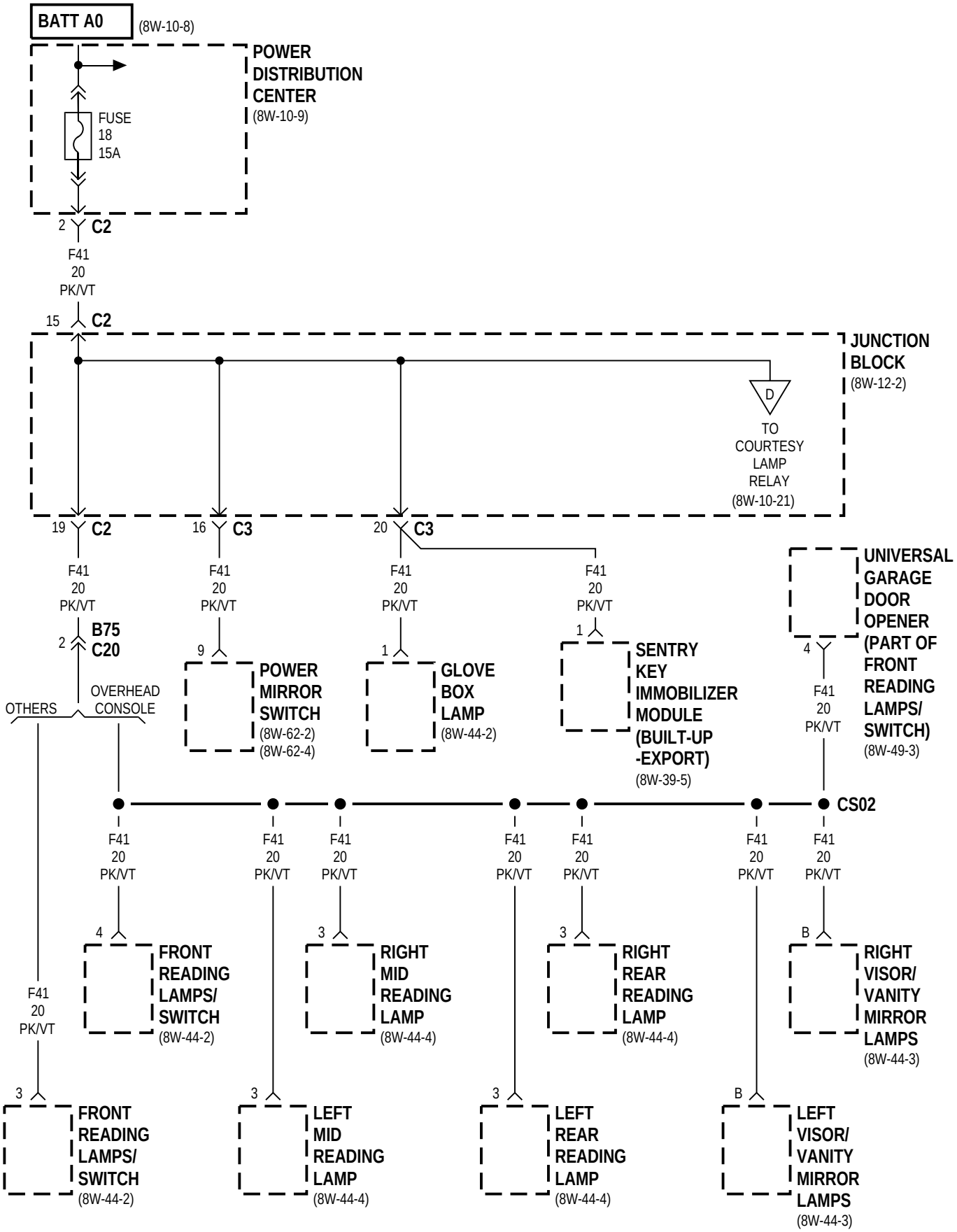
BATT A0
(8W-10-8)
POWER DISTRIBUTION CENTER
(8W-10-9)
FUSE 18 15A
2 C2
F41 20 PK/VT
15 C2
JUNCTION BLOCK
(8W-12-2)
D
TO COURTESY LAMP RELAY
(8W-10-21)
19 C2
16 C3
20 C3
F41 20 PK/VT
2 B75 C20
OTHERS
OVERHEAD CONSOLE
9
POWER MIRROR SWITCH
(8W-62-2)
(8W-62-4)
1
GLOVE BOX LAMP
(8W-44-2)
1
SENTRY KEY IMMOBILIZER MODULE (BUILT-UP -EXPORT)
(8W-39-5)
4
UNIVERSAL GARAGE DOOR OPENER (PART OF FRONT READING LAMPS/ SWITCH)
(8W-49-3)
CS02
4
FRONT READING LAMPS/ SWITCH
(8W-44-2)
3
RIGHT MID READING LAMP
(8W-44-4)
3
RIGHT REAR READING LAMP
(8W-44-4)
B
RIGHT VISOR/ VANITY MIRROR LAMPS
(8W-44-3)
3
FRONT READING LAMPS/ SWITCH
(8W-44-2)
3
LEFT MID READING LAMP
(8W-44-4)
3
LEFT REAR READING LAMP
(8W-44-4)
B
LEFT VISOR/ VANITY MIRROR LAMPS
(8W-44-3)

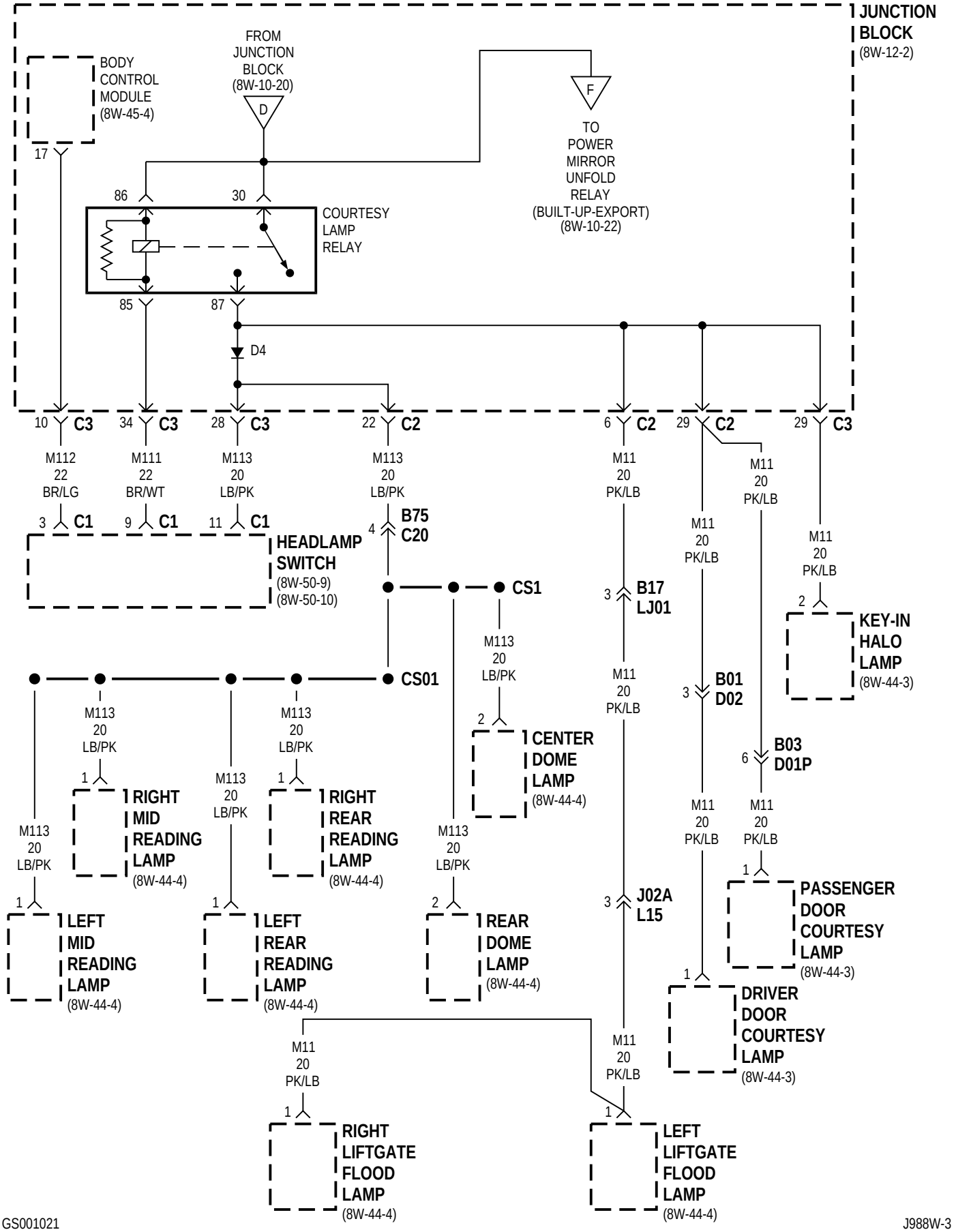
JUNCTION BLOCK
(8W-12-2)
BODY CONTROL MODULE
(8W-45-4)
FROM JUNCTION BLOCK
(8W-10-20)
D
F
TO POWER MIRROR UNFOLD RELAY
(BUILT-UP-EXPORT)
(8W-10-22)
17
86
30
COURTESY LAMP RELAY
85
87
D4
10 C3
34 C3
28 C3
22 C2
6 C2
29 C2
29 C3
M112 22 BR/LG
M111 22 BR/WT
M113 20 LB/PK
M113 20 LB/PK
M11 20 PK/LB
M11 20 PK/LB
M11 20 PK/LB
3 C1
9 C1
11 C1
4 B75 C20
HEADLAMP SWITCH
(8W-50-9)
(8W-50-10)
CS1
CS01
3 B17 LJ01
3 B01 D02
6 B03 D01P
2 KEY-IN HALO LAMP
(8W-44-3)
M113 20 LB/PK
2 CENTER DOME LAMP
(8W-44-4)
M113 20 LB/PK
1 RIGHT MID READING LAMP
(8W-44-4)
M113 20 LB/PK
1 RIGHT REAR READING LAMP
(8W-44-4)
M113 20 LB/PK
1 LEFT MID READING LAMP
(8W-44-4)
M113 20 LB/PK
1 LEFT REAR READING LAMP
(8W-44-4)
M113 20 LB/PK
2 REAR DOME LAMP
(8W-44-4)
3 J02A L15
1 PASSENGER DOOR COURTESY LAMP
(8W-44-3)
1 DRIVER DOOR COURTESY LAMP
(8W-44-3)
M11 20 PK/LB
1 RIGHT LIFTGATE FLOOD LAMP
(8W-44-4)
M11 20 PK/LB
1 LEFT LIFTGATE FLOOD LAMP
(8W-44-4)

BUILT-UP-EXPORT

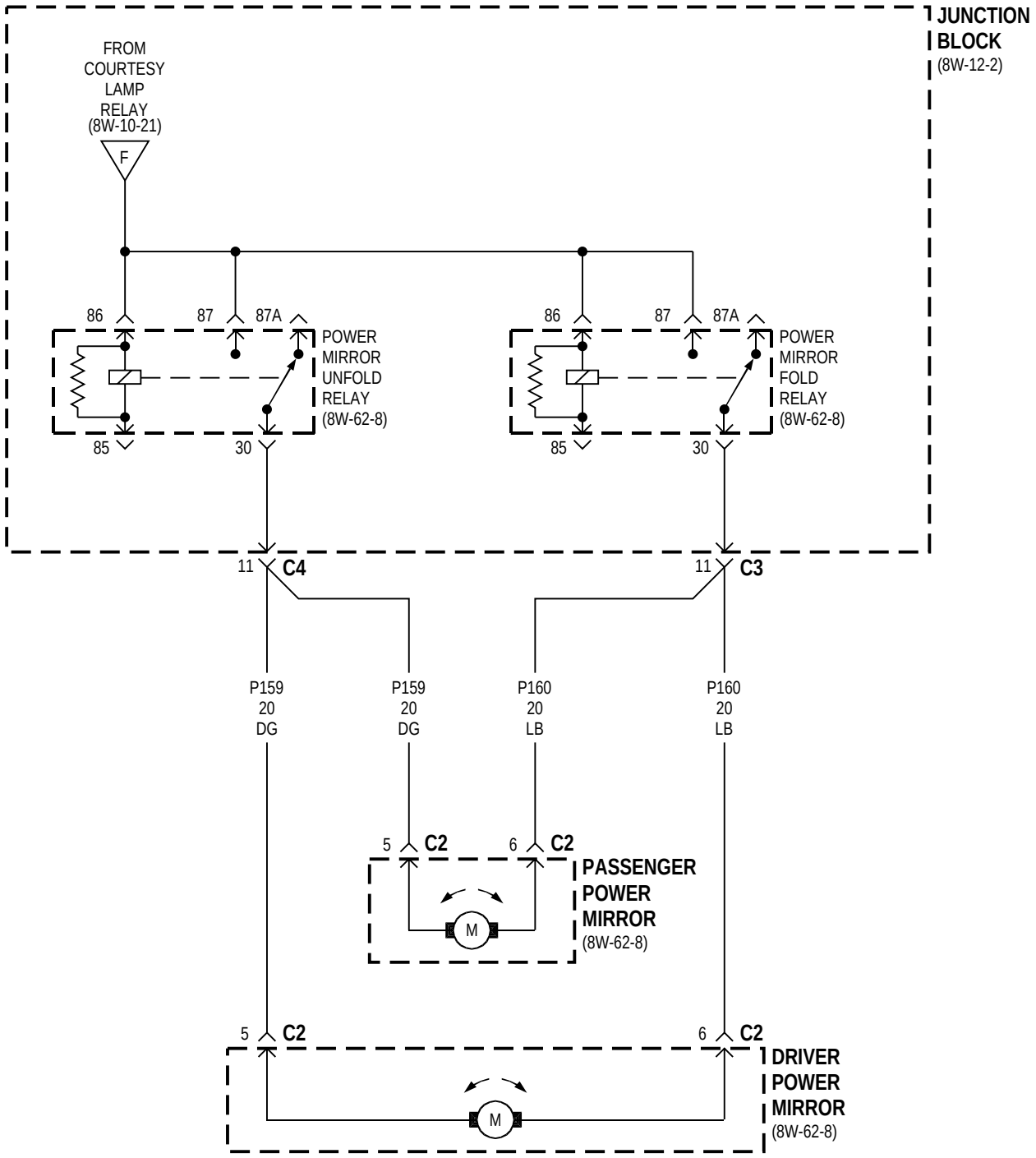

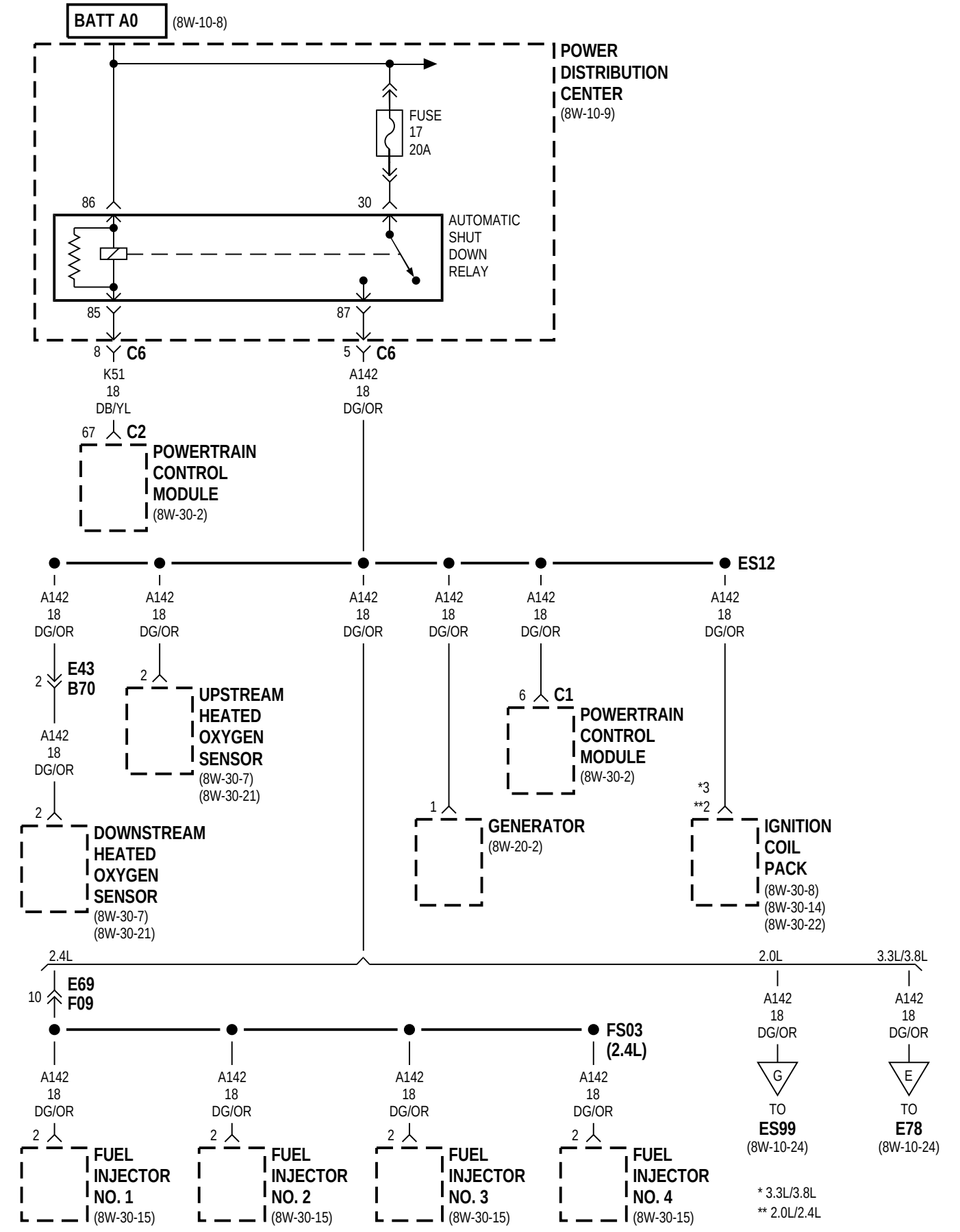
BATT A0
(8W-10-8)
POWER DISTRIBUTION CENTER
(8W-10-9)
FUSE 17 20A
86
30
AUTOMATIC SHUT DOWN RELAY
85
87
8 C6
K51 18 DB/YL
5 C6
A142 18 DG/OR
67 C2
POWERTRAIN CONTROL MODULE
(8W-30-2)
ES12
A142 18 DG/OR
2 E43 B70
2
UPSTREAM HEATED OXYGEN SENSOR
(8W-30-7)
(8W-30-21)
6 C1
POWERTRAIN CONTROL MODULE
(8W-30-2)
1
GENERATOR
(8W-20-2)
*3
**2
IGNITION COIL PACK
(8W-30-8)
(8W-30-14)
(8W-30-22)
DOWNSTREAM HEATED OXYGEN SENSOR
(8W-30-7)
(8W-30-21)
2.4L
2.0L
3.3L/3.8L
10 E69 F09
FS03 (2.4L)
FUEL INJECTOR NO. 1
(8W-30-15)
FUEL INJECTOR NO. 2
(8W-30-15)
FUEL INJECTOR NO. 3
(8W-30-15)
FUEL INJECTOR NO. 4
(8W-30-15)
G
TO ES99
(8W-10-24)
E
TO E78
(8W-10-24)
* 3.3L/3.8L
** 2.0L/2.4L

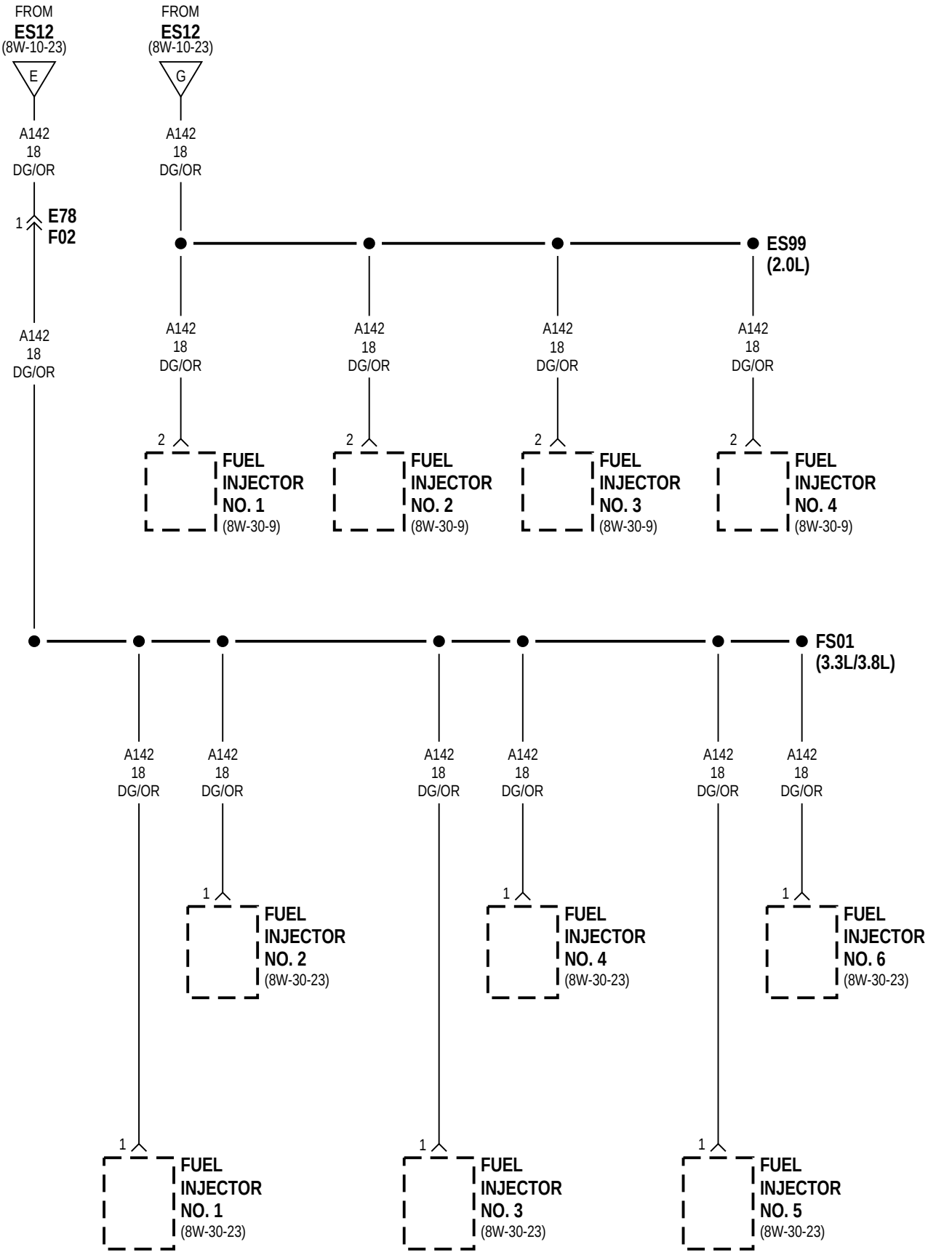
FROM
ES12
(8W-10-23)
E
FROM
ES12
(8W-10-23)
G
A142
18
DG/OR
1
E78
F02
ES99
(2.0L)
2
FUEL
INJECTOR
NO. 1
(8W-30-9)
FUEL
INJECTOR
NO. 2
(8W-30-9)
FUEL
INJECTOR
NO. 3
(8W-30-9)
FUEL
INJECTOR
NO. 4
(8W-30-9)
FS01
(3.3L/3.8L)
FUEL
INJECTOR
NO. 2
(8W-30-23)
FUEL
INJECTOR
NO. 4
(8W-30-23)
FUEL
INJECTOR
NO. 6
(8W-30-23)
FUEL
INJECTOR
NO. 1
(8W-30-23)
FUEL
INJECTOR
NO. 3
(8W-30-23)
FUEL
INJECTOR
NO. 5
(8W-30-23)

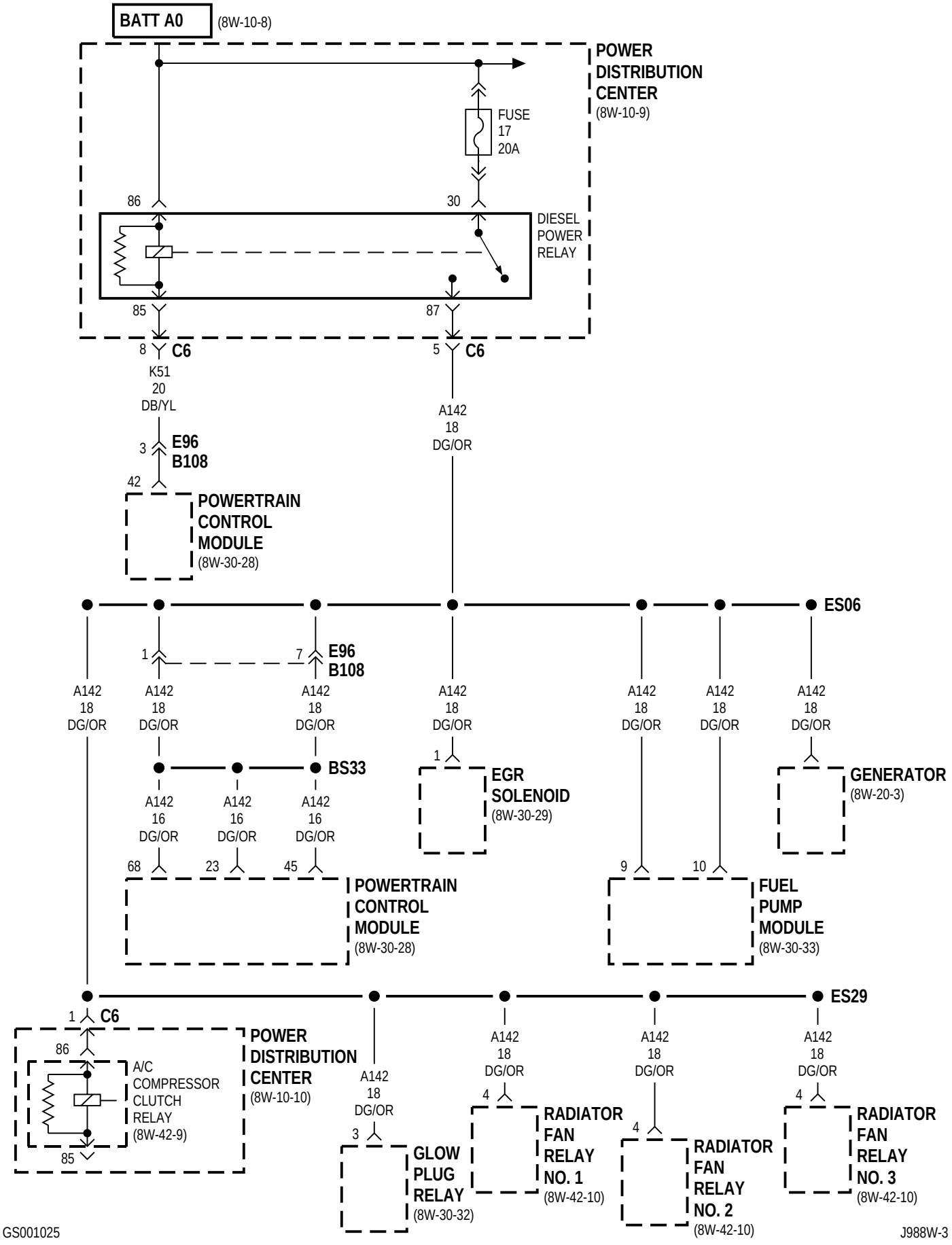

GS001025

J988W-3

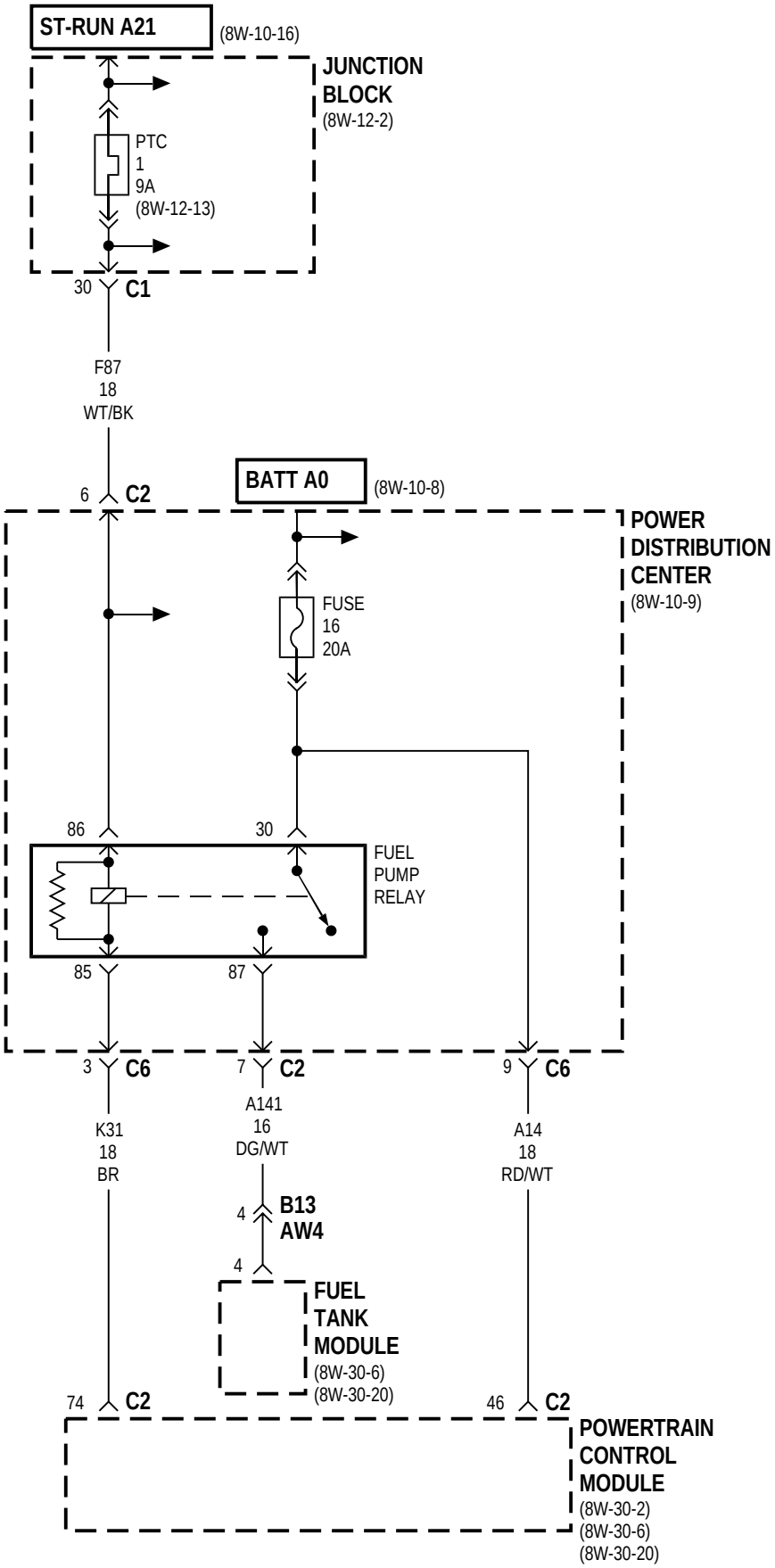
ST-RUN A21
(8W-10-16)
JUNCTION BLOCK
(8W-12-2)
PTC
1
9A
(8W-12-13)
30
C1
F87
18
WT/BK
6
C2
BATT A0
(8W-10-8)
POWER DISTRIBUTION CENTER
(8W-10-9)
FUSE
16
20A
86
30
FUEL PUMP RELAY
85
87
3
C6
7
C2
9
C6
K31
18
BR
A141
16
DG/WT
A14
18
RD/WT
4
B13
AW4
4
FUEL TANK MODULE
(8W-30-6)
(8W-30-20)
74
C2
46
C2
POWERTRAIN CONTROL MODULE
(8W-30-2)
(8W-30-6)
(8W-30-20)

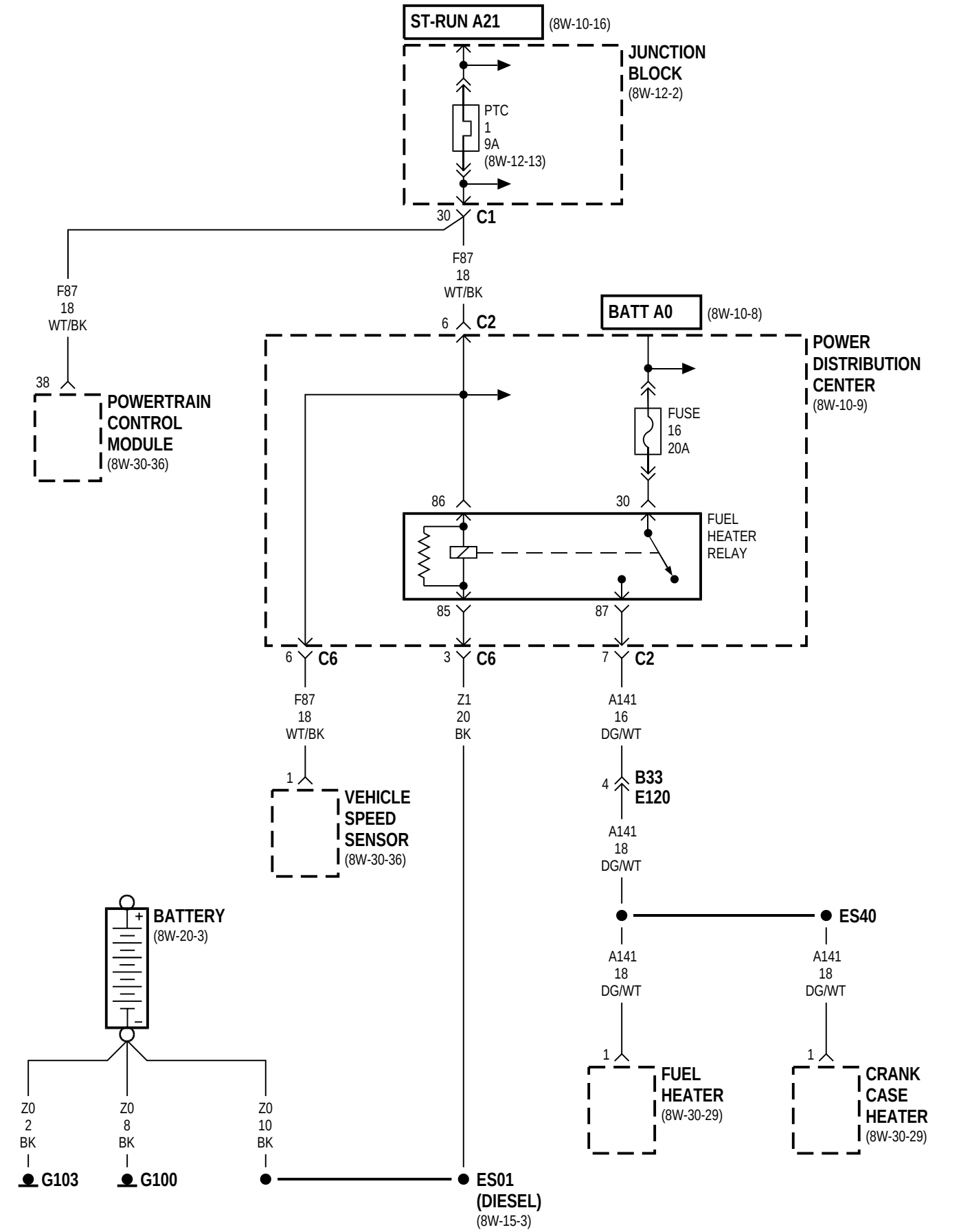
ST-RUN A21
(8W-10-16)
JUNCTION BLOCK
(8W-12-2)
PTC
1
9A
(8W-12-13)
30
C1
F87
18
WT/BK
F87
18
WT/BK
6
C2
BATT A0
(8W-10-8)
POWER DISTRIBUTION CENTER
(8W-10-9)
38
POWERTRAIN CONTROL MODULE
(8W-30-36)
FUSE
16
20A
86
30
FUEL HEATER RELAY
85
87
6
C6
3
C6
7
C2
F87
18
WT/BK
Z1
20
BK
A141
16
DG/WT
1
VEHICLE SPEED SENSOR
(8W-30-36)
4
B33
E120
A141
18
DG/WT
BATTERY
(8W-20-3)
ES40
A141
18
DG/WT
A141
18
DG/WT
1
FUEL HEATER
(8W-30-29)
1
CRANK CASE HEATER
(8W-30-29)
Z0
2
BK
Z0
8
BK
Z0
10
BK
G103
G100
ES01
(DIESEL)
(8W-15-3)

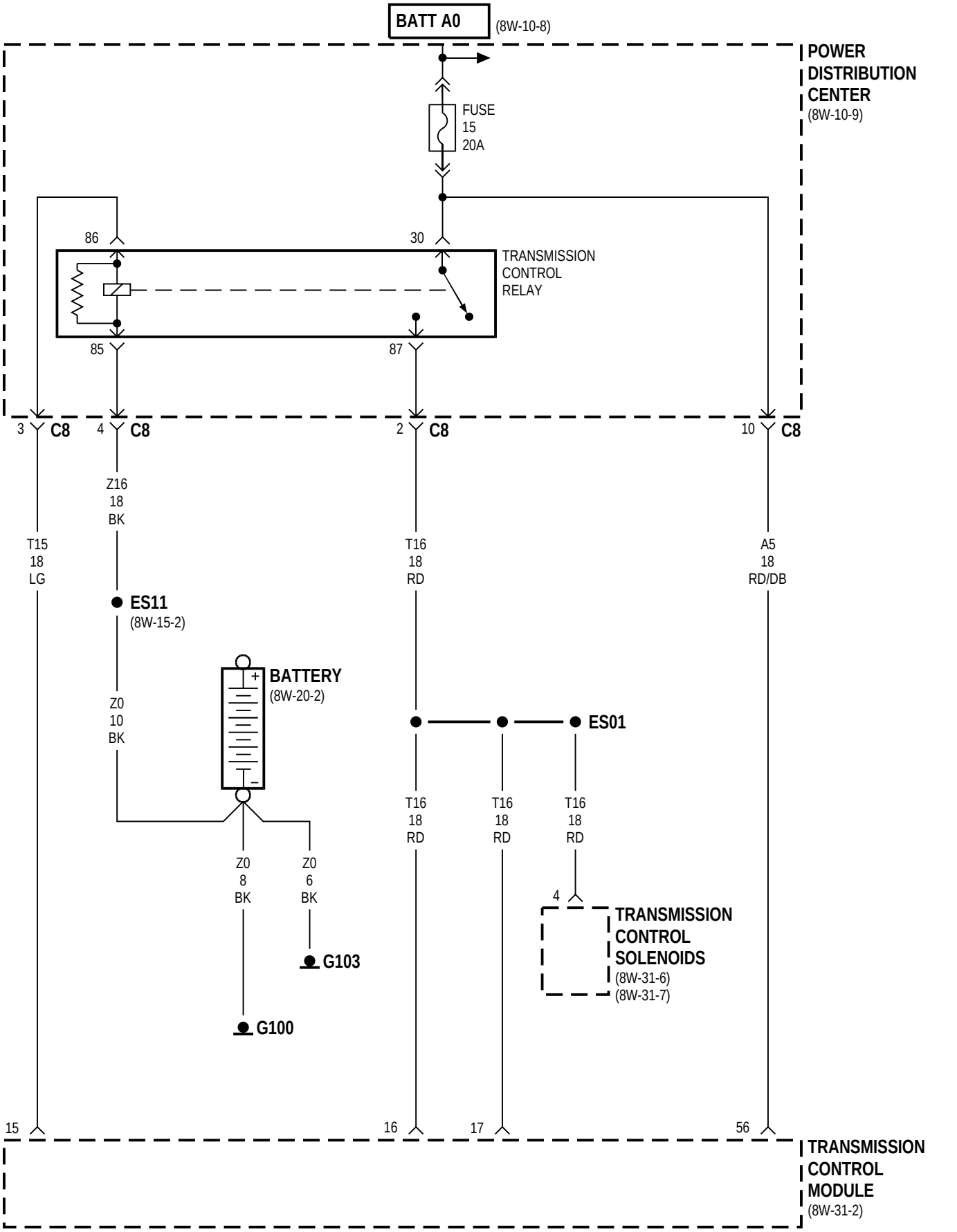
BATT A0
(8W-10-8)
POWER DISTRIBUTION CENTER
(8W-10-9)
FUSE
15
20A
86
30
TRANSMISSION CONTROL RELAY
85
87
3 C8
4 C8
2 C8
10 C8
Z16
18
BK
T15
18
LG
T16
18
RD
A5
18
RD/DB
ES11
(8W-15-2)
BATTERY
(8W-20-2)
Z0
10
BK
ES01
T16
18
RD
T16
18
RD
T16
18
RD
Z0
8
BK
Z0
6
BK
4
TRANSMISSION CONTROL SOLENOIDS
(8W-31-6)
(8W-31-7)
G103
G100
15
16
17
56
TRANSMISSION CONTROL MODULE
(8W-31-2)

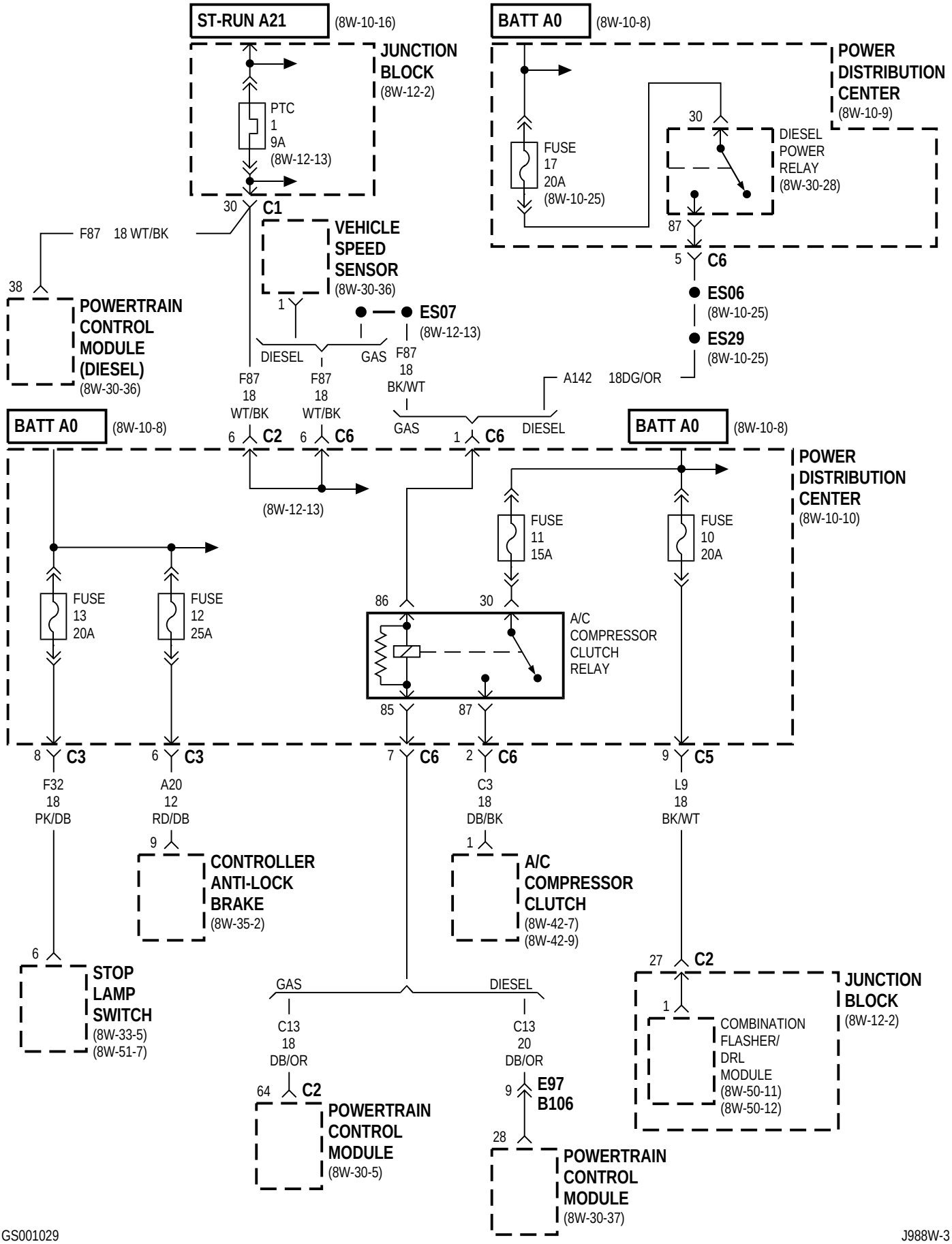
ST-RUN A21
(8W-10-16)
JUNCTION BLOCK
(8W-12-2)
PTC
1
9A
(8W-12-13)
30
C1
VEHICLE SPEED SENSOR
(8W-30-36)
F87 18 WT/BK
38
POWERTRAIN CONTROL MODULE (DIESEL)
(8W-30-36)
1
ES07
(8W-12-13)
DIESEL
GAS
F87 18 BK/WT
F87 18 WT/BK
F87 18 WT/BK
6 C2
6 C6
(8W-12-13)
BATT A0
(8W-10-8)
BATT A0
(8W-10-8)
POWER DISTRIBUTION CENTER
(8W-10-9)
FUSE 17 20A
(8W-10-25)
30
DIESEL POWER RELAY
(8W-30-28)
87
5 C6
ES06
(8W-10-25)
ES29
(8W-10-25)
A142 18DG/OR
GAS
1 C6
DIESEL
BATT A0
(8W-10-8)
POWER DISTRIBUTION CENTER
(8W-10-10)
FUSE 11 15A
FUSE 10 20A
FUSE 13 20A
FUSE 12 25A
86
30
A/C COMPRESSOR CLUTCH RELAY
85
87
8 C3
6 C3
7 C6
2 C6
9 C5
F32 18 PK/DB
A20 12 RD/DB
C3 18 DB/BK
L9 18 BK/WT
9
CONTROLLER ANTI-LOCK BRAKE
(8W-35-2)
1
A/C COMPRESSOR CLUTCH
(8W-42-7)
(8W-42-9)
6
STOP LAMP SWITCH
(8W-33-5)
(8W-51-7)
GAS
DIESEL
C13 18 DB/OR
C13 20 DB/OR
64 C2
POWERTRAIN CONTROL MODULE
(8W-30-5)
9 E97
B106
28
POWERTRAIN CONTROL MODULE
(8W-30-37)
27 C2
1
COMBINATION FLASHER/ DRL MODULE
(8W-50-11)
(8W-50-12)
JUNCTION BLOCK
(8W-12-2)

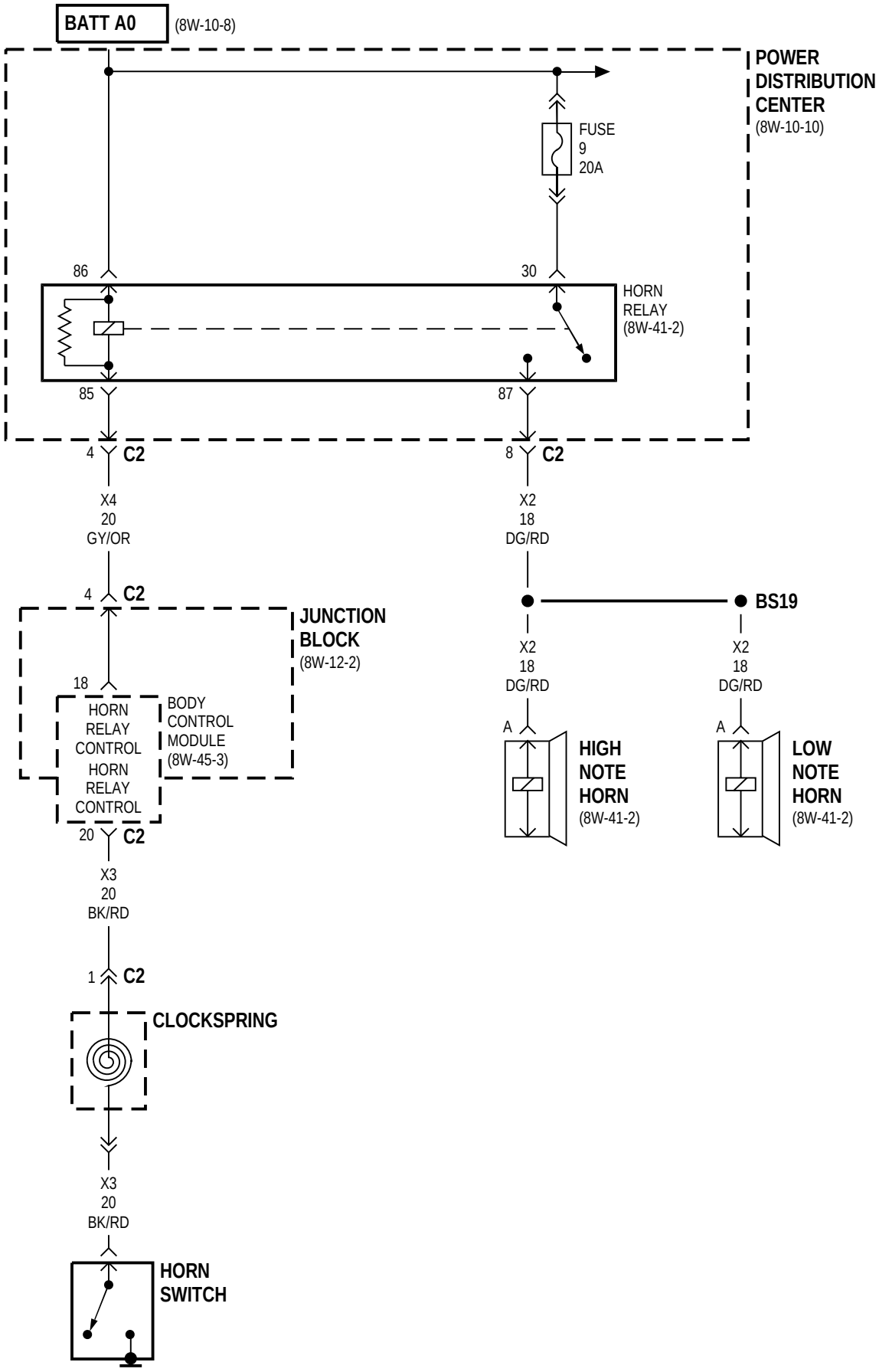
BATT A0
(8W-10-8)
POWER DISTRIBUTION CENTER
(8W-10-10)
FUSE 9 20A
86
30
HORN RELAY
(8W-41-2)
85
87
4 C2
8 C2
X4 20 GY/OR
X2 18 DG/RD
4 C2
JUNCTION BLOCK
(8W-12-2)
18
HORN RELAY CONTROL
BODY CONTROL MODULE
(8W-45-3)
HORN RELAY CONTROL
20 C2
X3 20 BK/RD
1 C2
CLOCKSPRING
X3 20 BK/RD
HORN SWITCH
BS19
X2 18 DG/RD
X2 18 DG/RD
A
A
HIGH NOTE HORN
(8W-41-2)
LOW NOTE HORN
(8W-41-2)

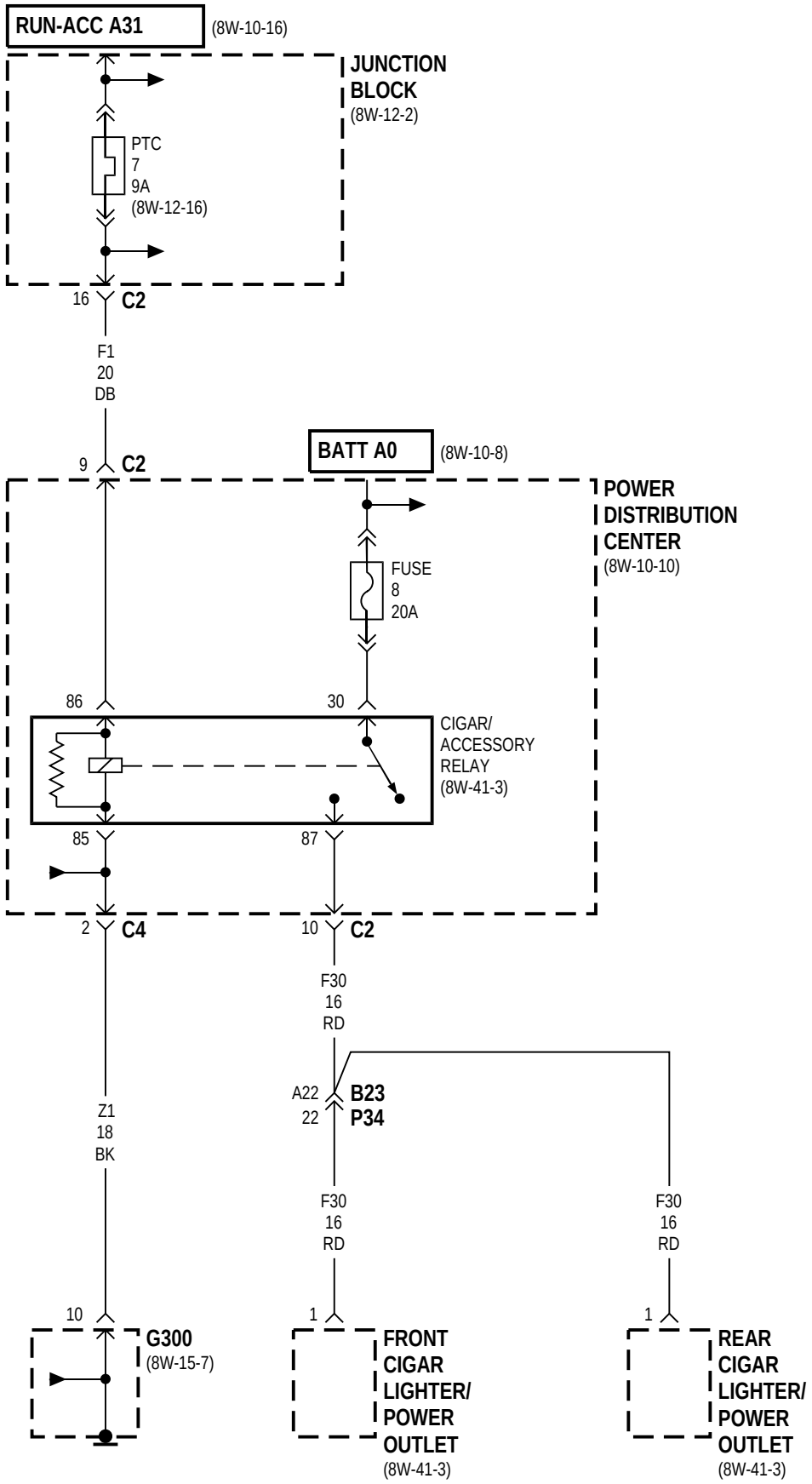
RUN-ACC A31
(8W-10-16)
JUNCTION BLOCK
(8W-12-2)
PTC
7
9A
(8W-12-16)
16
C2
F1
20
DB
BATT A0
(8W-10-8)
9
C2
POWER DISTRIBUTION CENTER
(8W-10-10)
FUSE
8
20A
86
30
CIGAR/
ACCESSORY
RELAY
(8W-41-3)
85
87
2
C4
10
C2
F30
16
RD
A22
22
B23
P34
Z1
18
BK
F30
16
RD
F30
16
RD
10
1
1
G300
(8W-15-7)
FRONT CIGAR LIGHTER/ POWER OUTLET
(8W-41-3)
REAR CIGAR LIGHTER/ POWER OUTLET
(8W-41-3)

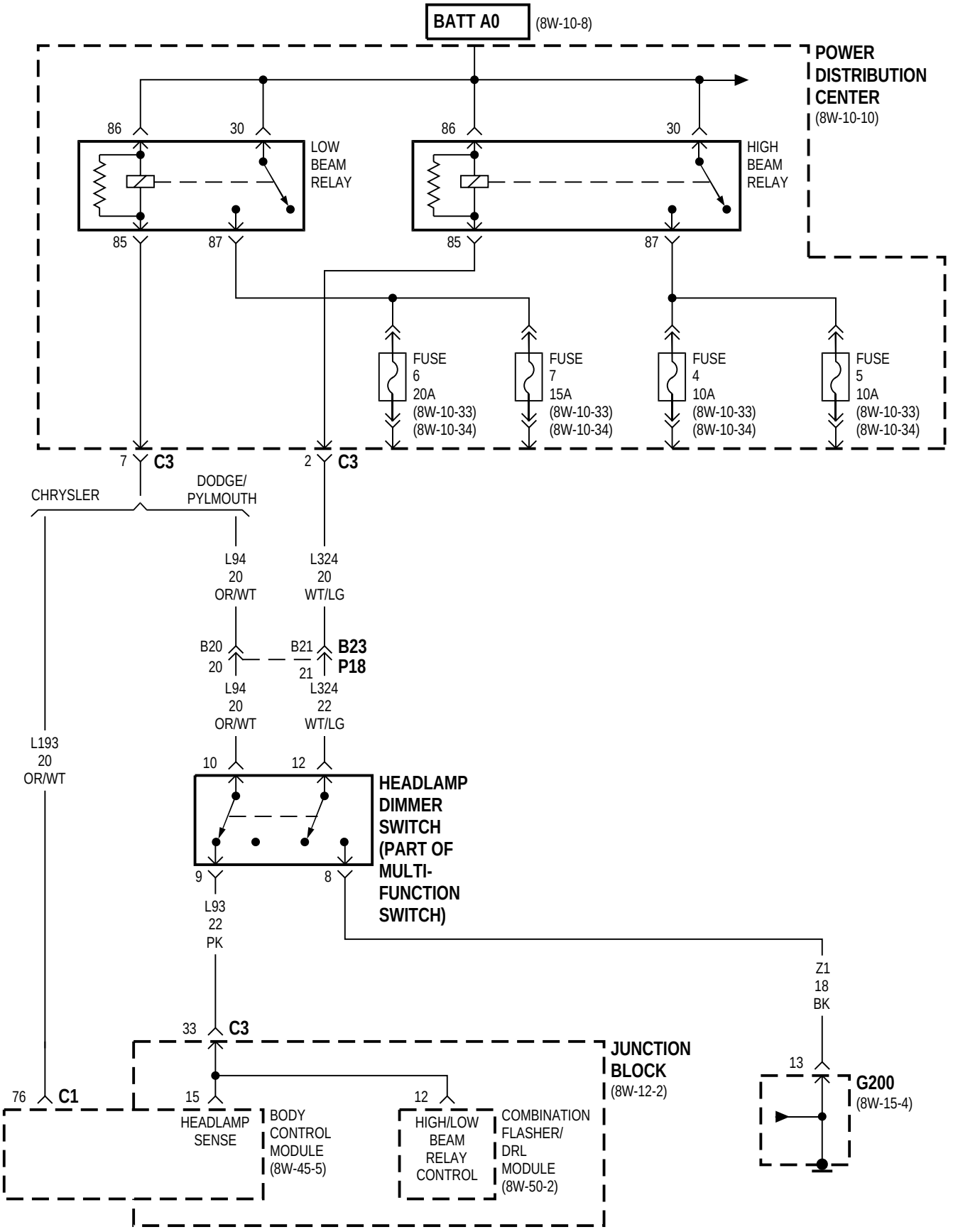
BATT A0
(8W-10-8)
POWER DISTRIBUTION CENTER
(8W-10-10)
86
30
LOW BEAM RELAY
85
87
86
30
HIGH BEAM RELAY
85
87
FUSE 6 20A (8W-10-33) (8W-10-34)
FUSE 7 15A (8W-10-33) (8W-10-34)
FUSE 4 10A (8W-10-33) (8W-10-34)
FUSE 5 10A (8W-10-33) (8W-10-34)
7 C3
2 C3
CHRYSLER
DODGE/ PYLMOUTH
L94 20 OR/WT
L324 20 WT/LG
B20 20
B21 21
B23 P18
L94 20 OR/WT
L324 22 WT/LG
L193 20 OR/WT
10
12
HEADLAMP DIMMER SWITCH (PART OF MULTI-FUNCTION SWITCH)
9
8
L93 22 PK
Z1 18 BK
33 C3
JUNCTION BLOCK
(8W-12-2)
13
G200
(8W-15-4)
76 C1
15
HEADLAMP SENSE
BODY CONTROL MODULE (8W-45-5)
12
HIGH/LOW BEAM RELAY CONTROL
COMBINATION FLASHER/ DRL MODULE (8W-50-2)

EXCEPT BUILT-UP-EXPORT

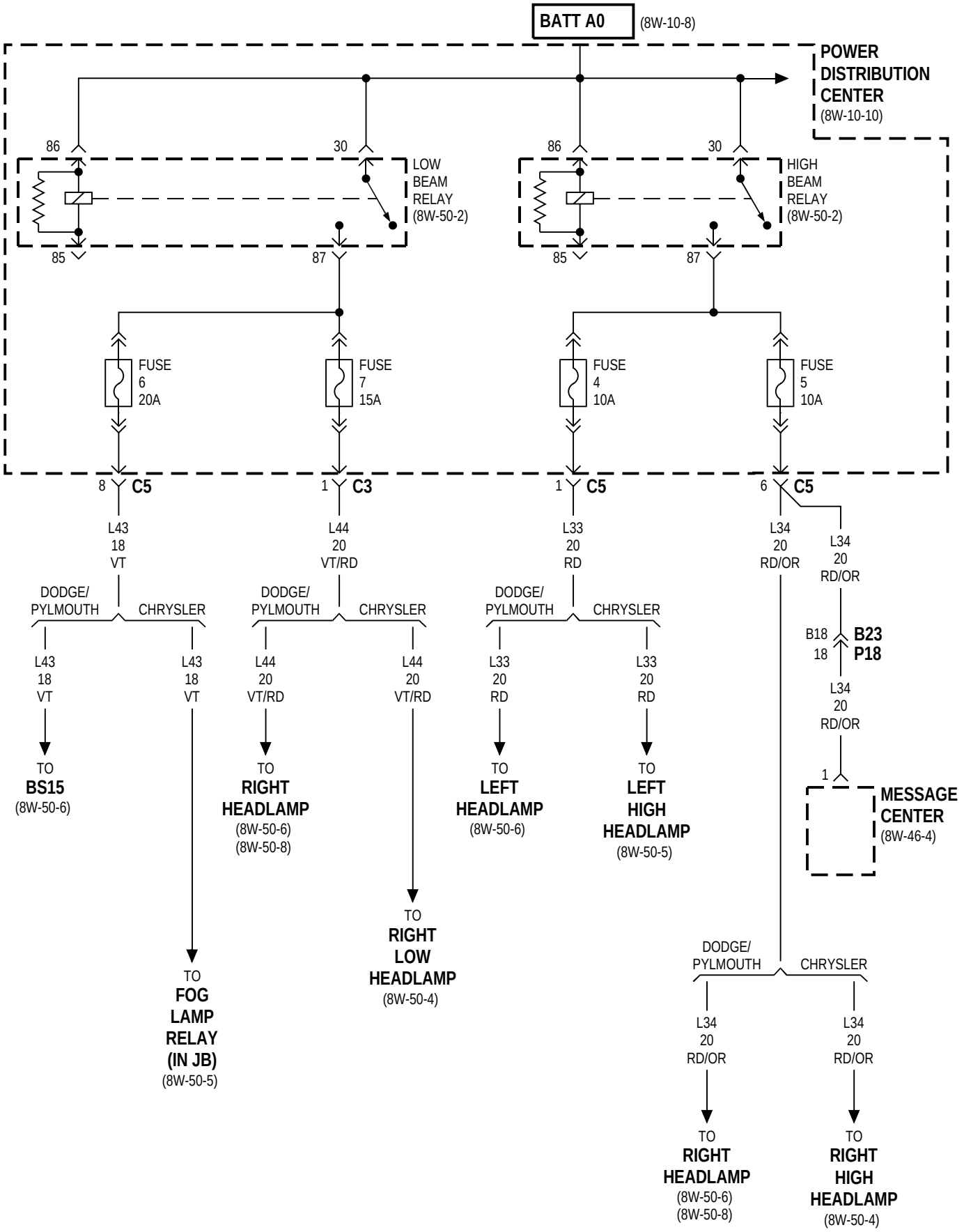

BUILT-UP-EXPORT

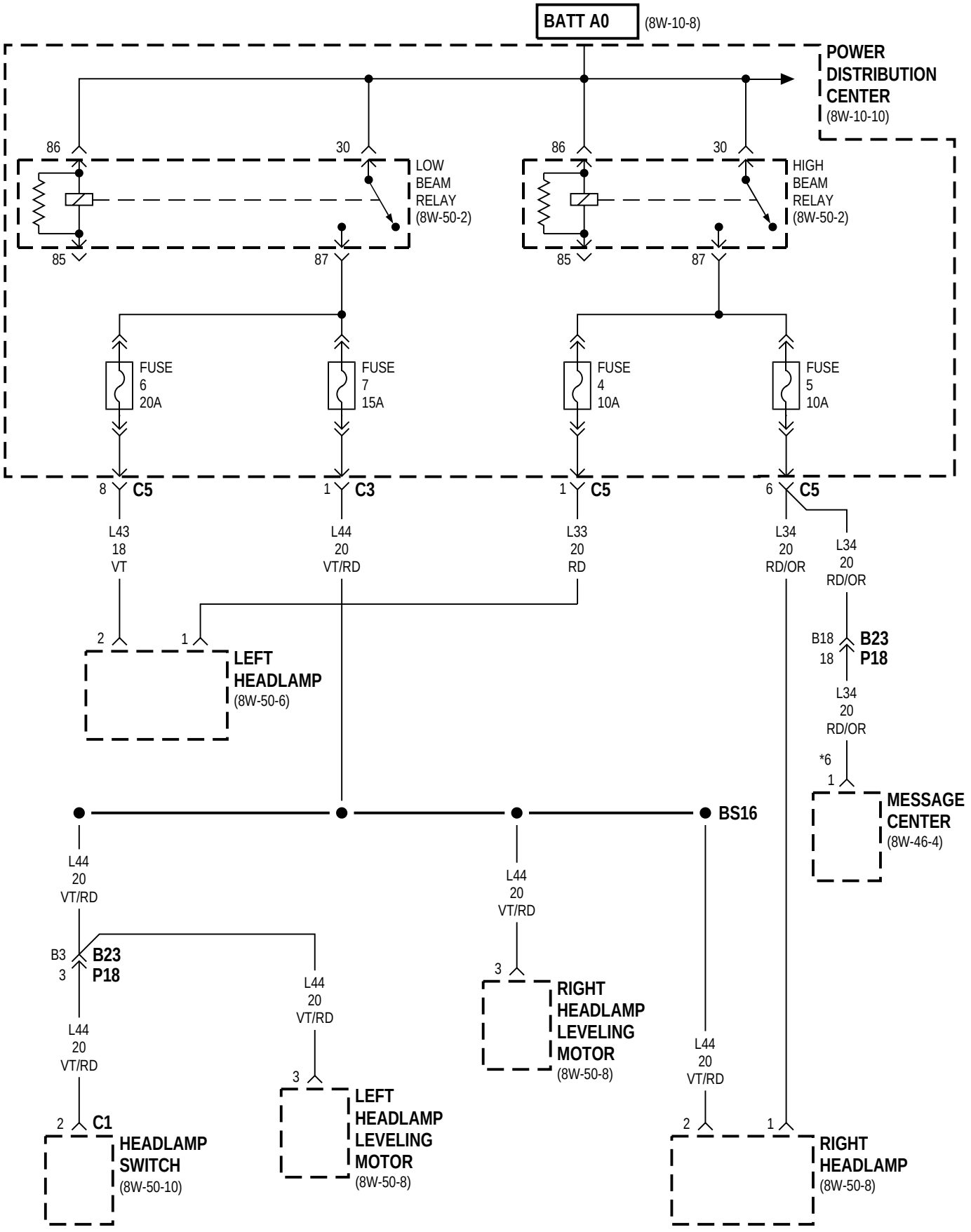

* RHD

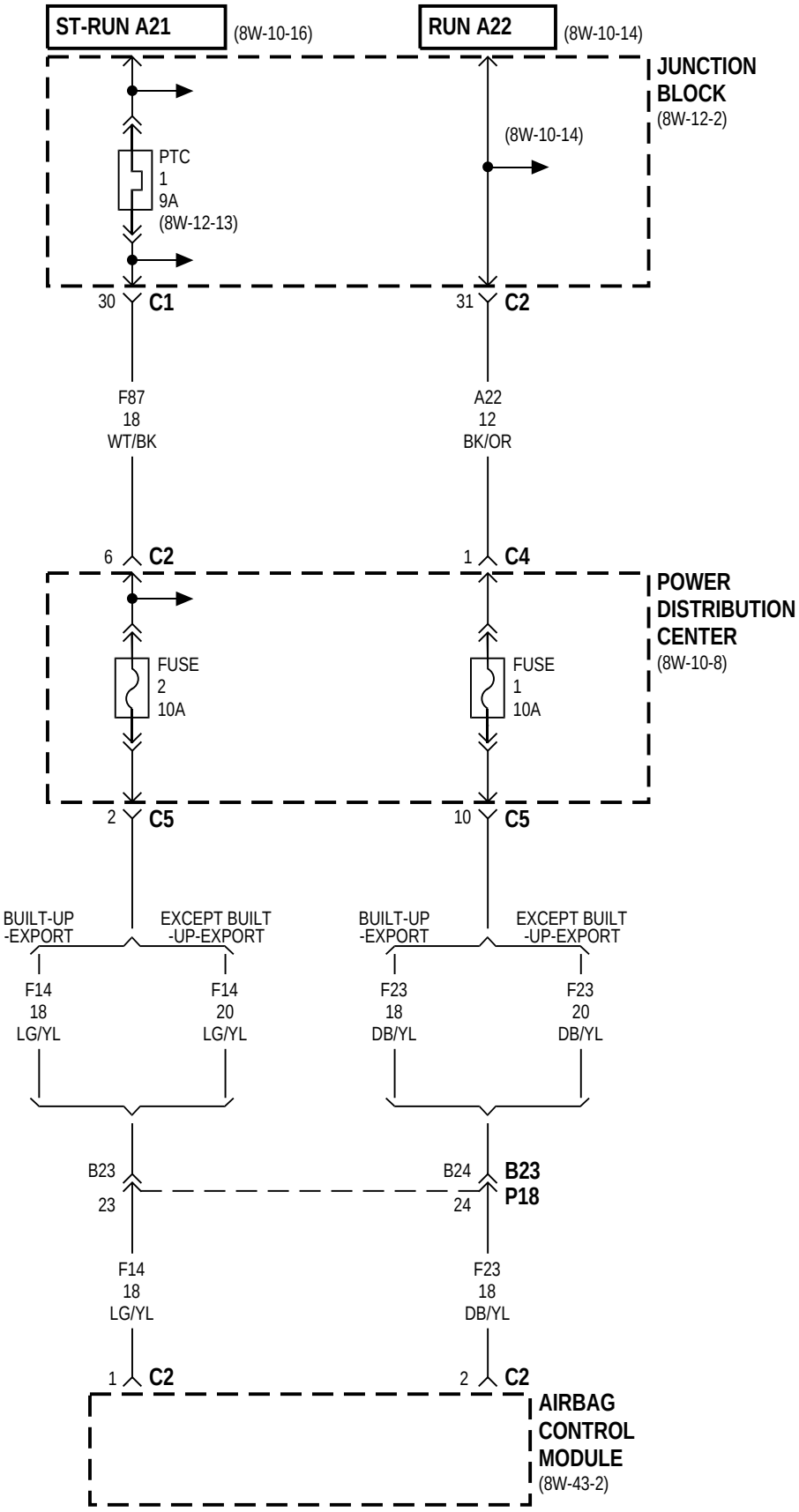
ST-RUN A21
(8W-10-16)
RUN A22
(8W-10-14)
JUNCTION BLOCK
(8W-12-2)
PTC
1
9A
(8W-12-13)
(8W-10-14)
30 C1
31 C2
F87
18
WT/BK
A22
12
BK/OR
6 C2
1 C4
POWER DISTRIBUTION CENTER
(8W-10-8)
FUSE
2
10A
FUSE
1
10A
2 C5
10 C5
BUILT-UP -EXPORT
EXCEPT BUILT -UP-EXPORT
BUILT-UP -EXPORT
EXCEPT BUILT -UP-EXPORT
F14
18
LG/YL
F14
20
LG/YL
F23
18
DB/YL
F23
20
DB/YL
B23
23
B24
24
B23
P18
F14
18
LG/YL
F23
18
DB/YL
1 C2
2 C2
AIRBAG CONTROL MODULE
(8W-43-2)

8W-12 JUNCTION BLOCK

Component	Page
A/C Compressor Clutch Relay	8W-12-13
A/C Heater Control	8W-12-9, 12, 23
Airbag Control Module	8W-12-13
Ash Receiver Lamp	8W-12-19, 23
Automatic Day/Night Mirror	8W-12-9
Back-Up Switch	8W-12-12
Body Control Module	8W-12-8, 9, 14, 15, 17, 18, 19, 20, 22, 23, 24, 26
Brake Pressure Switch	8W-12-17
Cigar/Accessory Relay	8W-12-16
Clutch Interlock Switch	8W-12-16
Clutch Interlock Switch Jumper	8W-12-16
Combination Flasher/DRL Module	8W-12-12, 17, 18, 19
Controller Anti-Lock Brake	8W-12-12
Courtesy Lamp Relay	8W-12-22
CS01	8W-12-22
CS02	8W-12-21
CS04	8W-12-9
CS1	8W-12-22
Data Link Connector	8W-12-20
Door Lock Relay	8W-12-15, 19
Door Unlock Relay	8W-12-14, 19
Driver Door Courtesy Lamp	8W-12-22
Driver Door Lock Motor	8W-12-14, 15
Driver Door Lock Switch	8W-12-23
Driver Door Unlock Relay	8W-12-14, 19
Driver Heated Seat Switch	8W-12-12
Driver Power Mirror	8W-12-10, 26
Driver Power Window Switch	8W-12-16, 23
EGR Solenoid	8W-12-13
Electric Wiper De-Icer	8W-12-11
Engine Starter Motor Relay	8W-12-16
ES07	8W-12-13
ES29	8W-12-13
Evap Leak Detection Pump	8W-12-13
Fog Lamp Relay	8W-12-25
Front Blower Motor Relay	8W-12-12
Front Cigar Lighter/Power Outlet	8W-12-23
Front Reading Lamps/Switch	8W-12-21
Front Washer Motor	8W-12-16, 23, 24
Front Wiper Switch	8W-12-16, 23, 24
Fuel Heater Relay	8W-12-13
Fuel Pump Relay	8W-12-13
Fuse 1 (JB)	8W-12-8
Fuse 2 (JB)	8W-12-9, 20
Fuse 2 (PDC)	8W-12-13
Fuse 3 (JB)	8W-12-8
Fuse 4 (JB)	8W-12-8
Fuse 5 (JB)	8W-12-8, 24
Fuse 6 (JB)	8W-12-9
Fuse 6 (PDC)	8W-12-25
Fuse 7 (JB)	8W-12-10
Fuse 8 (JB)	8W-12-11
Fuse 9 (JB)	8W-12-11
Fuse 10 (JB)	8W-12-16
Fuse 11 (JB)	8W-12-11
Fuse 12 (JB)	8W-12-12
Fuse 18 (PDC)	8W-12-26
Fuse 22 (PDC)	8W-12-8, 24
G300	8W-12-11, 19, 26
Glove Box Lamp	8W-12-21
Headlamp Dimmer Switch	8W-12-18, 25
Headlamp Switch	8W-12-8, 19, 22, 23, 25
Headlamp Washer	8W-12-24
Horn Relay	8W-12-17
HS2	8W-12-12
HS4	8W-12-12

Component	Page
Ignition Switch	8W-12-17, 19, 20
Instrument Cluster	8W-12-9, 19, 20, 23
Junction Block	8W-12-2, 8, 9, 10, 11, 12, 13, 14, 15, 16, 17, 18, 19, 20, 21, 22, 23, 24, 25, 26
Key-In Halo Lamp	8W-12-19, 22, 26
Left Combination Relay	8W-12-18
Left Fog Lamp	8W-12-8, 25
Left Front Park/Turn Signal Lamp	8W-12-8, 18
Left Liftgate Flood Lamp	8W-12-22
Left Low Headlamp	8W-12-25
Left Rear Lamp Assembly	8W-12-8, 18
Left Rear Sliding Door Contact	8W-12-14, 15
Left Repeater Lamp	8W-12-18
Left Stop/Turn Signal Relay	8W-12-18
License Lamp	8W-12-8
Liftgate Lock Motor	8W-12-14, 15
Low Beam Relay	8W-12-25
Message Center	8W-12-9, 17, 18, 19, 20
Name Brand Speaker Relay	8W-12-11, 19
Overhead Console	8W-12-9
Park Brake Switch	8W-12-17
Park Lamp Relay	8W-12-8, 24
Passenger Door Courtesy Lamp	8W-12-22
Passenger Door Lock Motor	8W-12-14, 15
Passenger Door Lock Switch	8W-12-23
Passenger Heated Seat Switch	8W-12-12
Passenger Power Mirror	8W-12-10, 26
Passenger Power Window Switch	8W-12-16, 23
Power Distribution Center	8W-8, 12-12, 13, 16, 17, 24, 25, 26
Power Folding Mirror Switch	8W-12-19, 26
Power Mirror Fold Relay	8W-12-26
Power Mirror Switch	8W-12-19, 21, 23
Power Mirror Unfold Relay	8W-12-26
Powertrain Control Module	8W-12-13
PTC 1 (JB)	8W-12-13
PTC 3 (JB)	8W-12-14, 15, 24
PTC 7 (JB)	8W-12-16, 24
PTC 8 (JB)	8W-12-16
PTC 9 (JB)	8W-12-16
Radio	8W-12-11, 20, 23
Radio Choke	8W-12-11
Rear A/C Heater Unit	8W-12-11
Rear Blower Front Control Switch	8W-12-23
Rear Blower Rear Control Switch	8W-12-23
Rear Washer Motor	8W-12-16
Rear Window Defogger	8W-12-10
Rear Window Defogger Relay	8W-12-10, 12
Rear Wiper Motor	8W-12-9
Remote Keyless Entry Module	8W-12-20
Right Combination Relay	8W-12-18
Right Fog Lamp	8W-12-8, 25
Right Front Park/Turn Signal Lamp	8W-12-8, 18
Right Liftgate Flood Lamp	8W-12-22
Right Rear Lamp Assembly	8W-12-8, 18
Right Rear Sliding Door Contact	8W-12-14, 15
Right Repeater Lamp	8W-12-18
Right Stop/Turn Signal Relay	8W-12-18
Sentry Key Immobilizer Module	8W-12-13, 21
Stop Lamp Switch	8W-12-19
Traction Control Switch	8W-12-19, 23
Trailer Tow Connector	8W-12-8
Transmission Control Module	8W-12-9, 16
Transmission Range Sensor	8W-12-12
Turn Signal/Hazard Switch	8W-12-17
Universal Garage Door Opener	8W-12-23
Washer Module	8W-12-8, 15, 16, 23

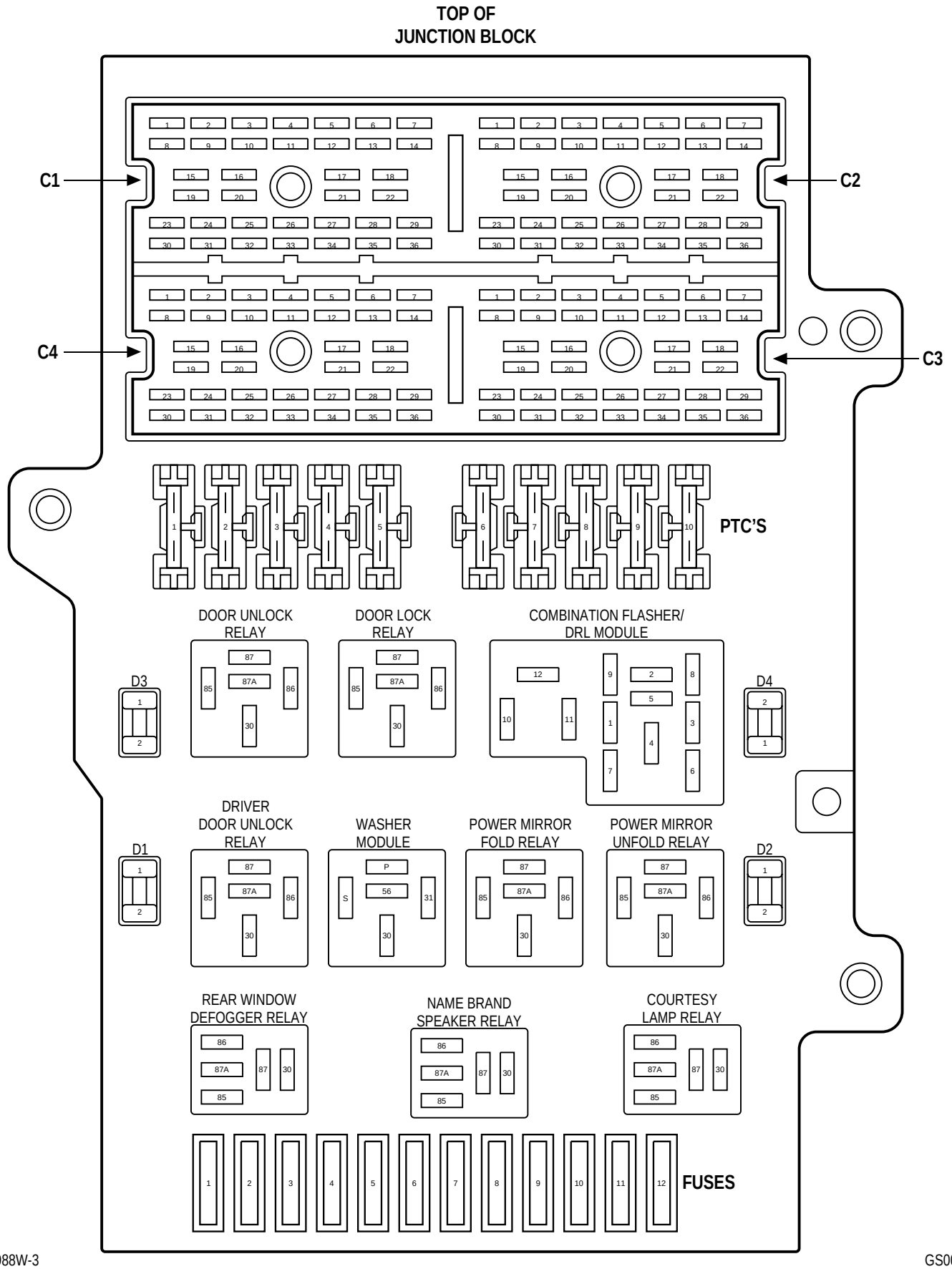
TOP OF
JUNCTION BLOCK
C1
C2
C3
C4
PTC'S
DOOR UNLOCK
RELAY
DOOR LOCK
RELAY
COMBINATION FLASHER/
DRL MODULE
D3
D4
DRIVER
DOOR UNLOCK
RELAY
WASHER
MODULE
POWER MIRROR
FOLD RELAY
POWER MIRROR
UNFOLD RELAY
D1
D2
REAR WINDOW
DEFOGGER RELAY
NAME BRAND
SPEAKER RELAY
COURTESY
LAMP RELAY
FUSES

FUSES

FUSE NO.	AMPS	FUSED CIRCUIT	FEED CIRCUIT
1	10A	INTERNAL	L78 20DG/YL L78 20DG/YL
2	10A	F11 20RD/WT	A81 20DG/RD A21 12DB
3	15A	L78 20DG/YL L78 20DG/YL	L7 12BK/YL
4 ■	15A	F39 18PK/LG F39 18PK/LG	L7 12BK/YL
5	15A	INTERNAL	L7 12BK/YL
6	20A	INTERNAL	A21 12DB
7	10A	C16 20LB/YL C16 20LB/YL	INTERNAL
8	10A	INTERNAL	INTERNAL
9	15A	V20 18RD	INTERNAL
10	10A	F45 20YL/RD	A41 12YL
11	20A	C40 12BR/WT	A22 12BK/OR
12	10A	INTERNAL	A22 12BK/OR

PTC'S
(POSITIVE TEMPERATURE COEFFICIENT)

PTC NO.	AMPS	FUSED CIRCUIT	FEED CIRCUIT
1	9A	INTERNAL	INTERNAL
2	-	-	-
3	9A	INTERNAL	INTERNAL
4	-	-	-
5	-	-	-
6	-	-	-
7	9A	INTERNAL	INTERNAL
8	9A	INTERNAL	INTERNAL
9	9A	F21 12TN	INTERNAL
10	-	-	-

■ FOG LAMPS

COMBINATION FLASHER/DRL MODULE

CAVITY	CIRCUIT	FUNCTION
1	L9 18BK/WT	FUSED B (+)
2	L61 18LG	LEFT FRONT TURN SIGNAL
3	L60 18TN	RIGHT FRONT TURN SIGNAL
4	INTERNAL	LEFT REAR TURN SIGNAL
5	INTERNAL	RIGHT REAR TURN SIGNAL
6	INTERNAL	FUSED IGNITION (RUN)
7	L305 22LB/WT	LEFT TURN SIGNAL SENSE
8	L302 22LB/YL	RIGHT TURN SIGNAL SENSE
9	L91 20DB/PK L91 22DB/PK	COMBINATION FLASHER SWITCHED GROUND
10	INTERNAL	RED BRAKE WARNING LAMP SENSE
11	INTERNAL	GROUND
12	INTERNAL	HIGH/LOW BEAM RELY CONTROL

COURTESY LAMP RELAY

CAVITY	CIRCUIT	FUNCTION
30	INTERNAL	FUSED B (+)
85	M111 22BR/WT	COURTESY LAMP RELAY CONTROL
86	INTERNAL	FUSED B (+)
87	INTERNAL	COURTESY LAMP RELAY OUTPUT
-	-	-

DOOR LOCK RELAY

CAVITY	CIRCUIT	FUNCTION
30	INTERNAL	DOOR LOCK RELAY OUTPUT
85	INTERNAL	DOOR LOCK RELAY CONTROL
86	INTERNAL	FUSED B (+)
87	INTERNAL	FUSED B (+)
87A	INTERNAL	GROUND

DOOR UNLOCK RELAY

CAVITY	CIRCUIT	FUNCTION
30	INTERNAL	DOOR UNLOCK RELAY OUTPUT
85	INTERNAL	DOOR UNLOCK RELAY CONTROL
86	INTERNAL	FUSED B (+)
87	INTERNAL	FUSED B (+)
87A	INTERNAL	GROUND

DRIVER DOOR UNLOCK RELAY

CAVITY	CIRCUIT	FUNCTION
30	F131 20BK/PK	LEFT FRONT DOOR UNLOCK RELAY OUTPUT
85	INTERNAL	LEFT FRONT DOOR UNLOCK RELAY CONTROL
86	INTERNAL	FUSED B (+)
87	INTERNAL	FUSED B (+)
87A	INTERNAL	GROUND

FOG LAMP RELAY*

CAVITY	CIRCUIT	FUNCTION
30	INTERNAL	FUSED LOW BEAM RELAY OUTPUT
85	L94 20OR/WT	FOG LAMP RELAYCONTROL
86	INTERNAL	FUSED LOW BEAM RELAY OUTPUT
87	INTERNAL	FOG LAMP RELAY OUTPUT
87A	-	-

NAME BRAND SPEAKER RELAY

CAVITY	CIRCUIT	FUNCTION
30	INTERNAL	FUSED IGNITION (RUN-ACC)
85	INTERNAL	GROUND
86	X60 20RD/DG	NAME BRAND SPEAKER RELAY DRIVER
87	X1 16DG/RD	NAME BRAND SPEAKER RELAY OUTPUT
-	-	-

* CHRYSLER

POWER MIRROR FOLD RELAY
(BUILT-UP-EXPORT)

CAVITY	CIRCUIT	FUNCTION
30	P160 20LB P160 20LB	POWER MIRROR FOLD OUTPUT
85	P171 20VT/WT	POWER MIRROR FOLD OUTPUT
86	INTERNAL	FUSED B (+)
87	INTERNAL	FUSED B (+)
87A	INTERNAL	GROUND

POWER MIRROR UNFOLD RELAY
(BUILT-UP-EXPORT)

CAVITY	CIRCUIT	FUNCTION
30	P159 20DG P159 20DG	POWER MIRROR UNFOLD OUTPUT
85	P174 20YL/RD	POWER MIRROR UNFOLD OUTPUT
86	INTERNAL	FUSED B (+)
87	INTERNAL	FUSED B (+)
87A	INTERNAL	GROUND

REAR WINDOW DEFOGGER RELAY

CAVITY	CIRCUIT	FUNCTION
30	A4 12BK/RD	FUSED B (+)
85	C14 22WT/RD	REAR WINDOW DEFOGGER RELAY CONTROL
86	INTERNAL	FUSED IGNITION (RUN)
87	INTERNAL	REAR WINDOW DEFOGGER RELAY OUTPUT
-	-	-

WASHER MODULE
(BUILT-UP-EXPORT)

CAVITY	CIRCUIT	FUNCTION
30	V53 18RD/YL	WASHER MODULE OUTPUT
31	INTERNAL	WASHER MODULE CONTROL
56	INTERNAL	FUSED PARK LAMP RELAY OUTPUT
P	INTERNAL	FUSED B(+)
S	INTERNAL	FUSED IGNITION (RUN-ACC)

DIODES

D1

CAVITY	CIRCUIT	ORIENTATION
1	INTERNAL	ANODE (+)
2	INTERNAL	CATHODE

D2
(NOT USED)

CAVITY	CIRCUIT	ORIENTATION
1	-	ANODE (+)
2	-	CATHODE

D3

CAVITY	CIRCUIT	ORIENTATION
1	INTERNAL	ANODE (+)
2	INTERNAL	CATHODE

D4

CAVITY	CIRCUIT	ORIENTATION
1	INTERNAL	ANODE (+)
2	INTERNAL	CATHODE

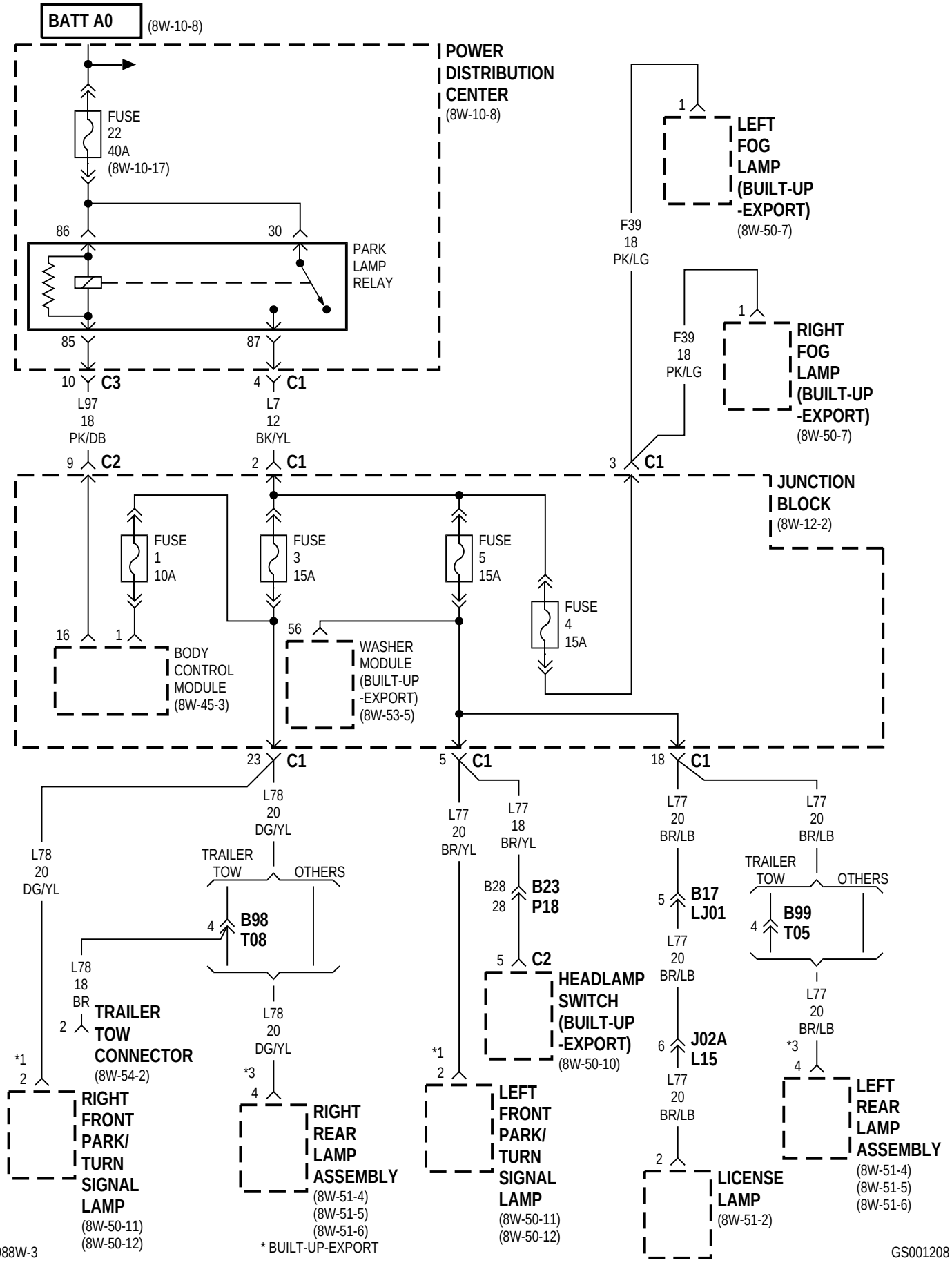
BATT A0
(8W-10-8)
POWER DISTRIBUTION CENTER
(8W-10-8)
FUSE 22 40A
(8W-10-17)
86
30
PARK LAMP RELAY
85
87
10 C3
L97 18 PK/DB
4 C1
L7 12 BK/YL
9 C2
2 C1
3 C1
JUNCTION BLOCK
(8W-12-2)
FUSE 1 10A
FUSE 3 15A
FUSE 5 15A
FUSE 4 15A
16
1
BODY CONTROL MODULE
(8W-45-3)
56
WASHER MODULE (BUILT-UP -EXPORT)
(8W-53-5)
F39 18 PK/LG
1
LEFT FOG LAMP (BUILT-UP -EXPORT)
(8W-50-7)
F39 18 PK/LG
1
RIGHT FOG LAMP (BUILT-UP -EXPORT)
(8W-50-7)
23 C1
5 C1
18 C1
L78 20 DG/YL
L78 20 DG/YL
TRAILER TOW
OTHERS
4 B98 T08
L78 18 BR
2 TRAILER TOW CONNECTOR
(8W-54-2)
*1
2
RIGHT FRONT PARK/ TURN SIGNAL LAMP
(8W-50-11)
(8W-50-12)
L78 20 DG/YL
*3
4
RIGHT REAR LAMP ASSEMBLY
(8W-51-4)
(8W-51-5)
(8W-51-6)
* BUILT-UP-EXPORT
L77 20 BR/YL
L77 18 BR/YL
B28 28 B23 P18
5 C2
HEADLAMP SWITCH (BUILT-UP -EXPORT)
(8W-50-10)
*1
2
LEFT FRONT PARK/ TURN SIGNAL LAMP
(8W-50-11)
(8W-50-12)
L77 20 BR/LB
5 B17 LJ01
L77 20 BR/LB
6 J02A L15
L77 20 BR/LB
2
LICENSE LAMP
(8W-51-2)
L77 20 BR/LB
TRAILER TOW
OTHERS
4 B99 T05
L77 20 BR/LB
*3
4
LEFT REAR LAMP ASSEMBLY
(8W-51-4)
(8W-51-5)
(8W-51-6)

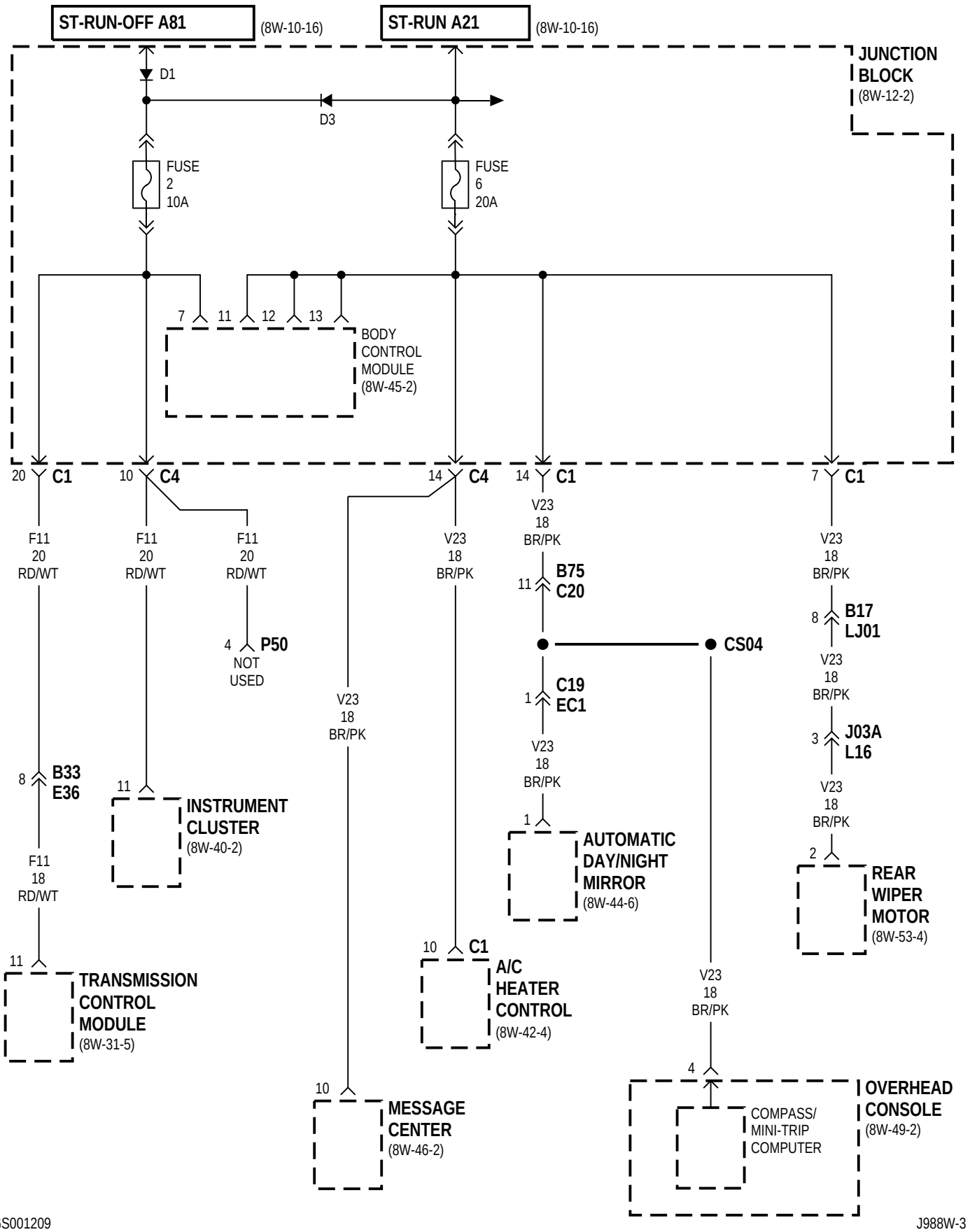
ST-RUN-OFF A81
(8W-10-16)
ST-RUN A21
(8W-10-16)
JUNCTION BLOCK
(8W-12-2)
D1
D3
FUSE 2 10A
FUSE 6 20A
7 11 12 13
BODY CONTROL MODULE
(8W-45-2)
20 C1
10 C4
14 C4
14 C1
7 C1
F11 20 RD/WT
F11 20 RD/WT
F11 20 RD/WT
V23 18 BR/PK
V23 18 BR/PK
V23 18 BR/PK
4 P50
NOT USED
11 B75 C20
8 B17 LJ01
CS04
1 C19 EC1
V23 18 BR/PK
V23 18 BR/PK
V23 18 BR/PK
3 J03A L16
V23 18 BR/PK
8 B33 E36
11
INSTRUMENT CLUSTER
(8W-40-2)
1
AUTOMATIC DAY/NIGHT MIRROR
(8W-44-6)
2
REAR WIPER MOTOR
(8W-53-4)
F11 18 RD/WT
11
TRANSMISSION CONTROL MODULE
(8W-31-5)
10 C1
A/C HEATER CONTROL
(8W-42-4)
V23 18 BR/PK
4
10
MESSAGE CENTER
(8W-46-2)
COMPASS/ MINI-TRIP COMPUTER
OVERHEAD CONSOLE
(8W-49-2)

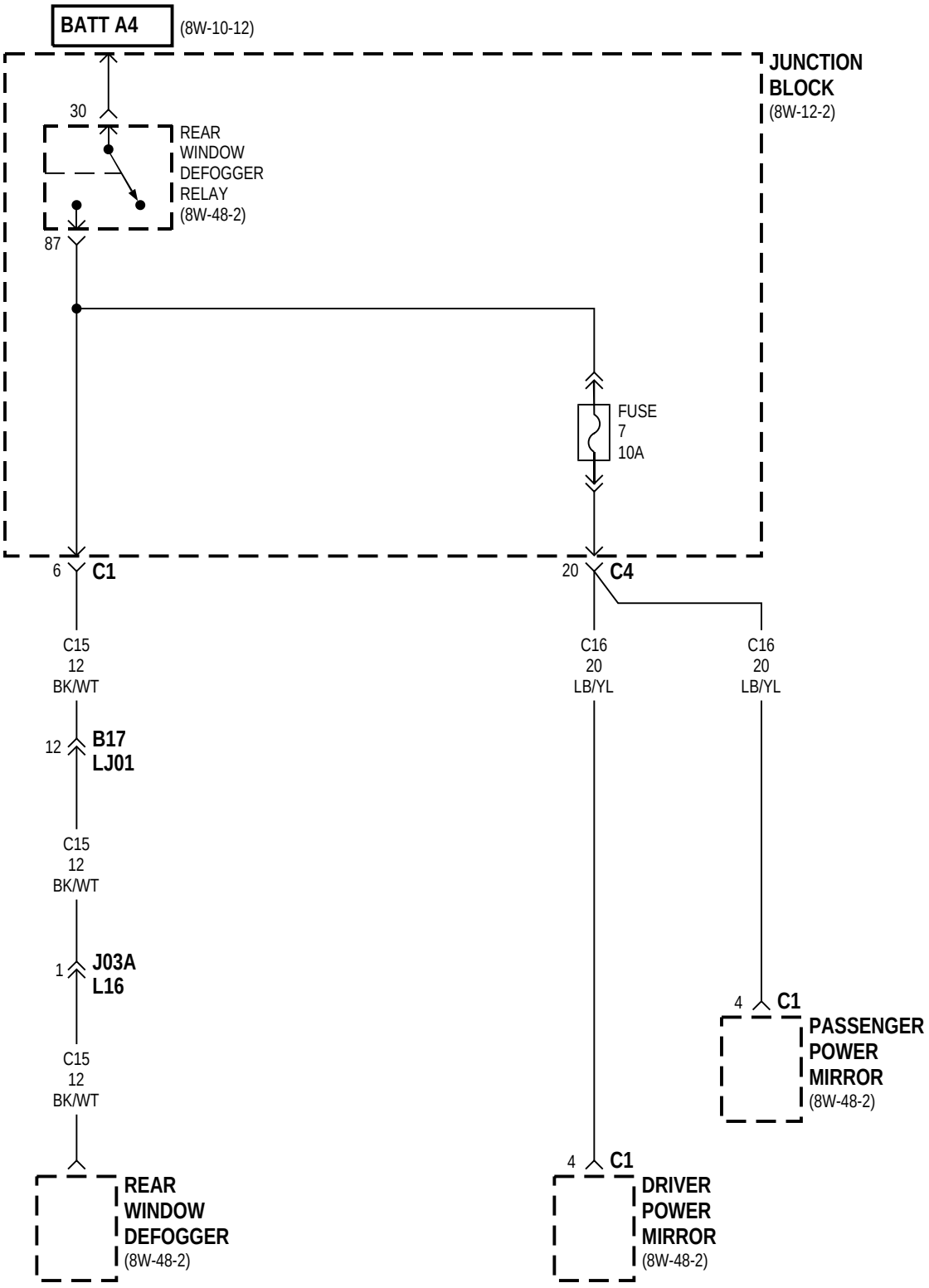
BATT A4
(8W-10-12)
JUNCTION BLOCK
(8W-12-2)
30
REAR WINDOW DEFOGGER RELAY
(8W-48-2)
87
FUSE
7
10A
6
C1
20
C4
C15
12
BK/WT
C16
20
LB/YL
C16
20
LB/YL
12
B17
LJ01
C15
12
BK/WT
1
J03A
L16
C15
12
BK/WT
4
C1
PASSENGER POWER MIRROR
(8W-48-2)
REAR WINDOW DEFOGGER
(8W-48-2)
4
C1
DRIVER POWER MIRROR
(8W-48-2)

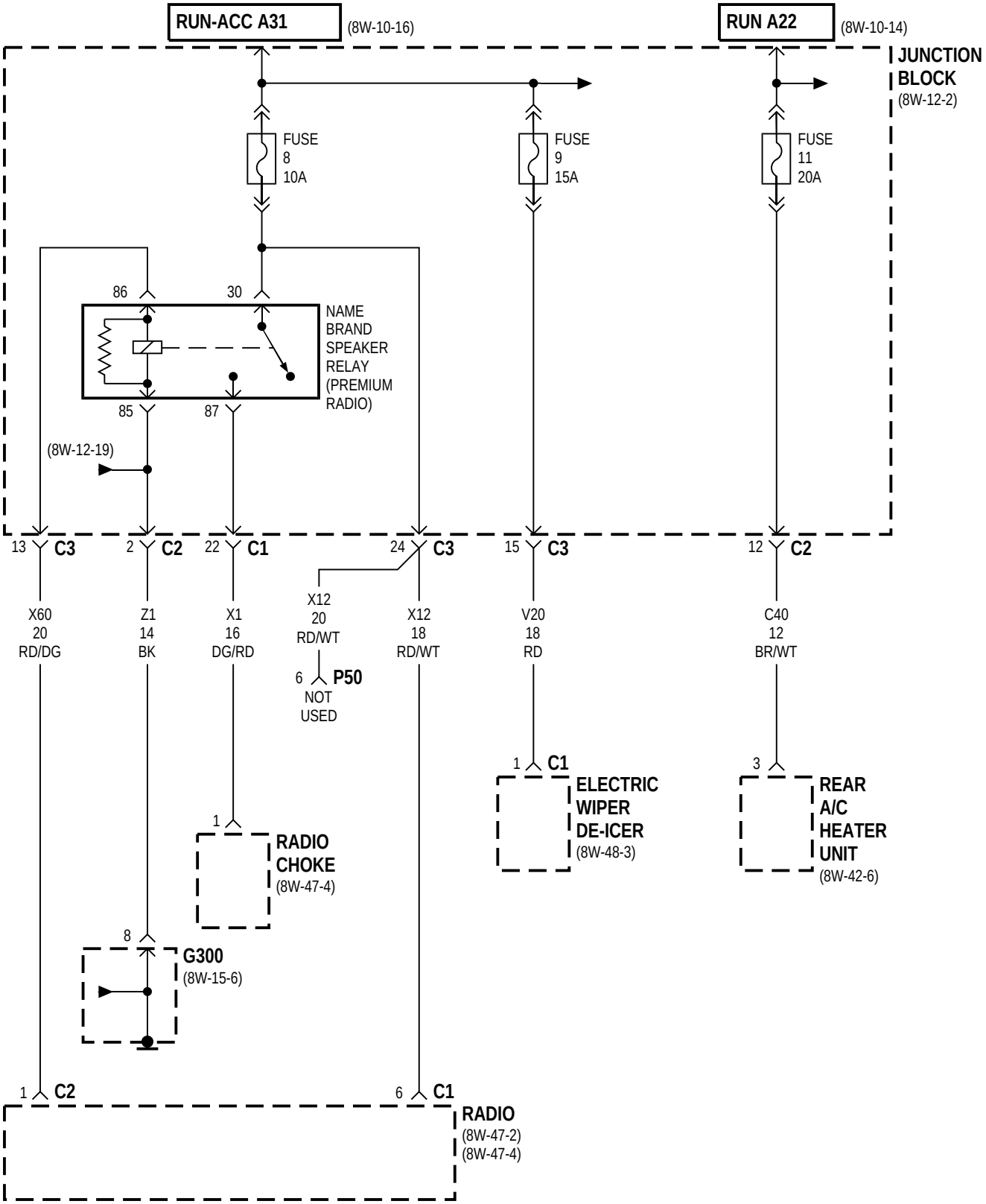
RUN-ACC A31
(8W-10-16)
RUN A22
(8W-10-14)
JUNCTION BLOCK
(8W-12-2)
FUSE 8 10A
FUSE 9 15A
FUSE 11 20A
86
30
NAME BRAND SPEAKER RELAY (PREMIUM RADIO)
85
87
(8W-12-19)
13 C3
2 C2
22 C1
24 C3
15 C3
12 C2
X60 20 RD/DG
Z1 14 BK
X1 16 DG/RD
X12 20 RD/WT
X12 18 RD/WT
V20 18 RD
C40 12 BR/WT
6 P50
NOT USED
1 C1
ELECTRIC WIPER DE-ICER
(8W-48-3)
3
REAR A/C HEATER UNIT
(8W-42-6)
1
RADIO CHOKE
(8W-47-4)
8
G300
(8W-15-6)
1 C2
6 C1
RADIO
(8W-47-2)
(8W-47-4)

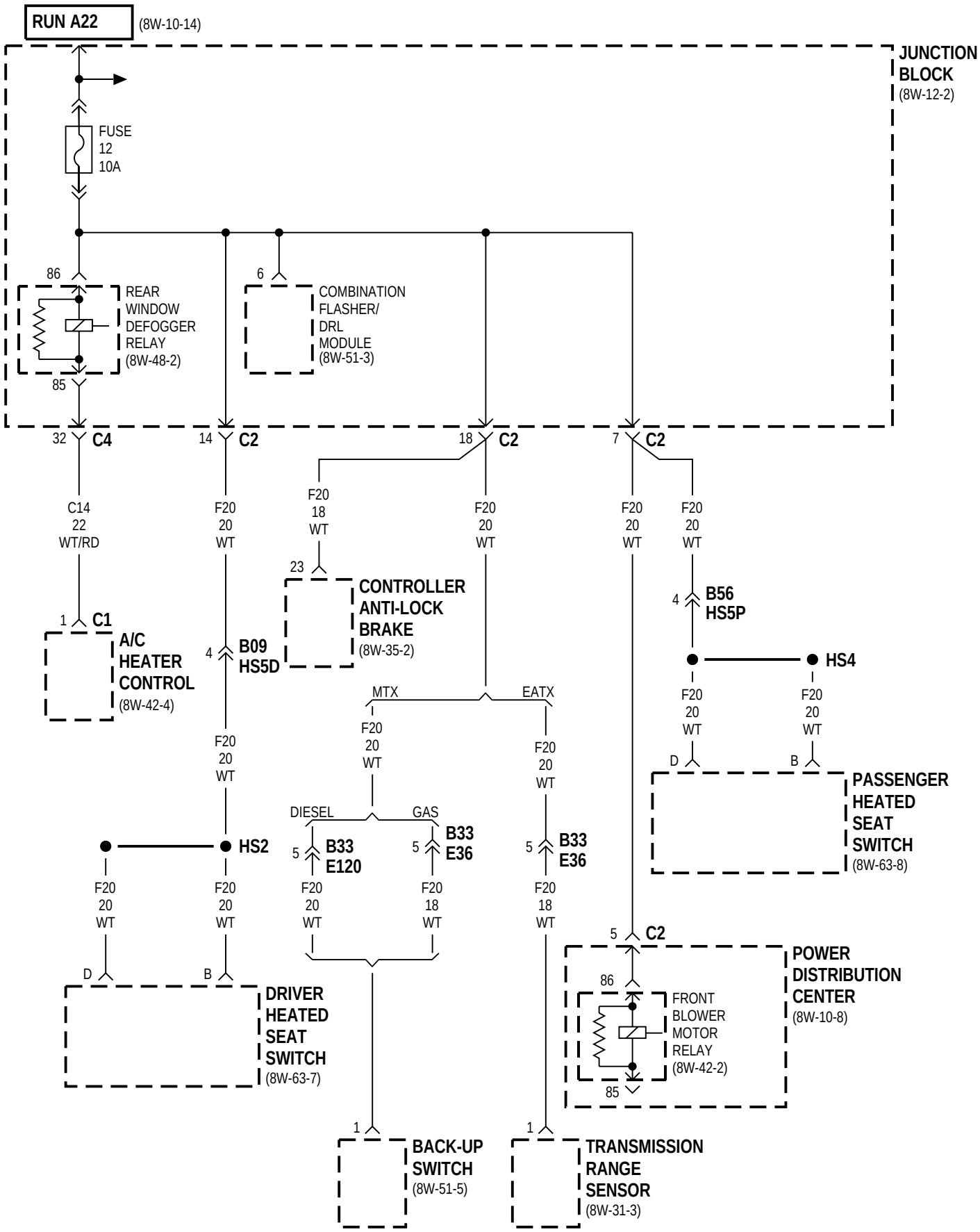
RUN A22
(8W-10-14)
JUNCTION BLOCK
(8W-12-2)
FUSE
12
10A
86
REAR WINDOW DEFOGGER RELAY
(8W-48-2)
85
6
COMBINATION FLASHER/ DRL MODULE
(8W-51-3)
32 C4
14 C2
18 C2
7 C2
C14
22
WT/RD
F20
20
WT
F20
18
WT
23
CONTROLLER ANTI-LOCK BRAKE
(8W-35-2)
1 C1
A/C HEATER CONTROL
(8W-42-4)
4 B09 HS5D
MTX
EATX
DIESEL
GAS
5 B33 E120
5 B33 E36
5 B33 E36
HS2
F20
18
WT
4 B56 HS5P
HS4
D
B
PASSENGER HEATED SEAT SWITCH
(8W-63-8)
DRIVER HEATED SEAT SWITCH
(8W-63-7)
5 C2
POWER DISTRIBUTION CENTER
(8W-10-8)
FRONT BLOWER MOTOR RELAY
(8W-42-2)
1
BACK-UP SWITCH
(8W-51-5)
TRANSMISSION RANGE SENSOR
(8W-31-3)

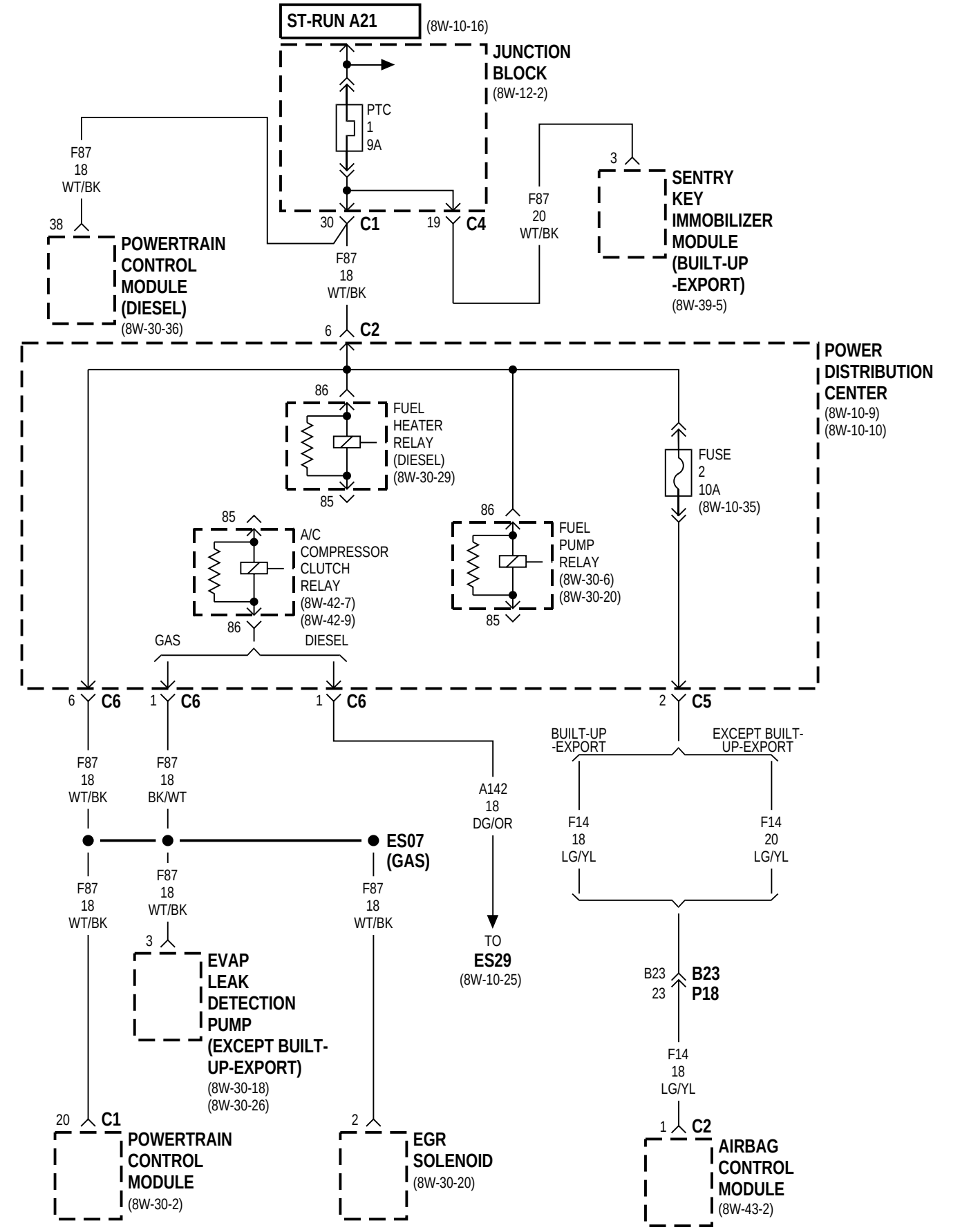
ST-RUN A21
(8W-10-16)
JUNCTION BLOCK
(8W-12-2)
PTC
1
9A
F87
18
WT/BK
38
POWERTRAIN CONTROL MODULE (DIESEL)
(8W-30-36)
30 C1
19 C4
F87
18
WT/BK
F87
20
WT/BK
3
SENTRY KEY IMMOBILIZER MODULE (BUILT-UP -EXPORT)
(8W-39-5)
6 C2
POWER DISTRIBUTION CENTER
(8W-10-9)
(8W-10-10)
86
FUEL HEATER RELAY (DIESEL)
(8W-30-29)
85
FUSE
2
10A
(8W-10-35)
85
A/C COMPRESSOR CLUTCH RELAY
(8W-42-7)
(8W-42-9)
86
86
FUEL PUMP RELAY
(8W-30-6)
(8W-30-20)
85
GAS
DIESEL
6 C6
1 C6
1 C6
2 C5
BUILT-UP -EXPORT
EXCEPT BUILT-UP-EXPORT
F87
18
WT/BK
F87
18
BK/WT
A142
18
DG/OR
F14
18
LG/YL
F14
20
LG/YL
ES07
(GAS)
F87
18
WT/BK
F87
18
WT/BK
F87
18
WT/BK
3
EVAP LEAK DETECTION PUMP (EXCEPT BUILT-UP-EXPORT)
(8W-30-18)
(8W-30-26)
TO
ES29
(8W-10-25)
B23
23
B23
P18
F14
18
LG/YL
20 C1
POWERTRAIN CONTROL MODULE
(8W-30-2)
2
EGR SOLENOID
(8W-30-20)
1 C2
AIRBAG CONTROL MODULE
(8W-43-2)

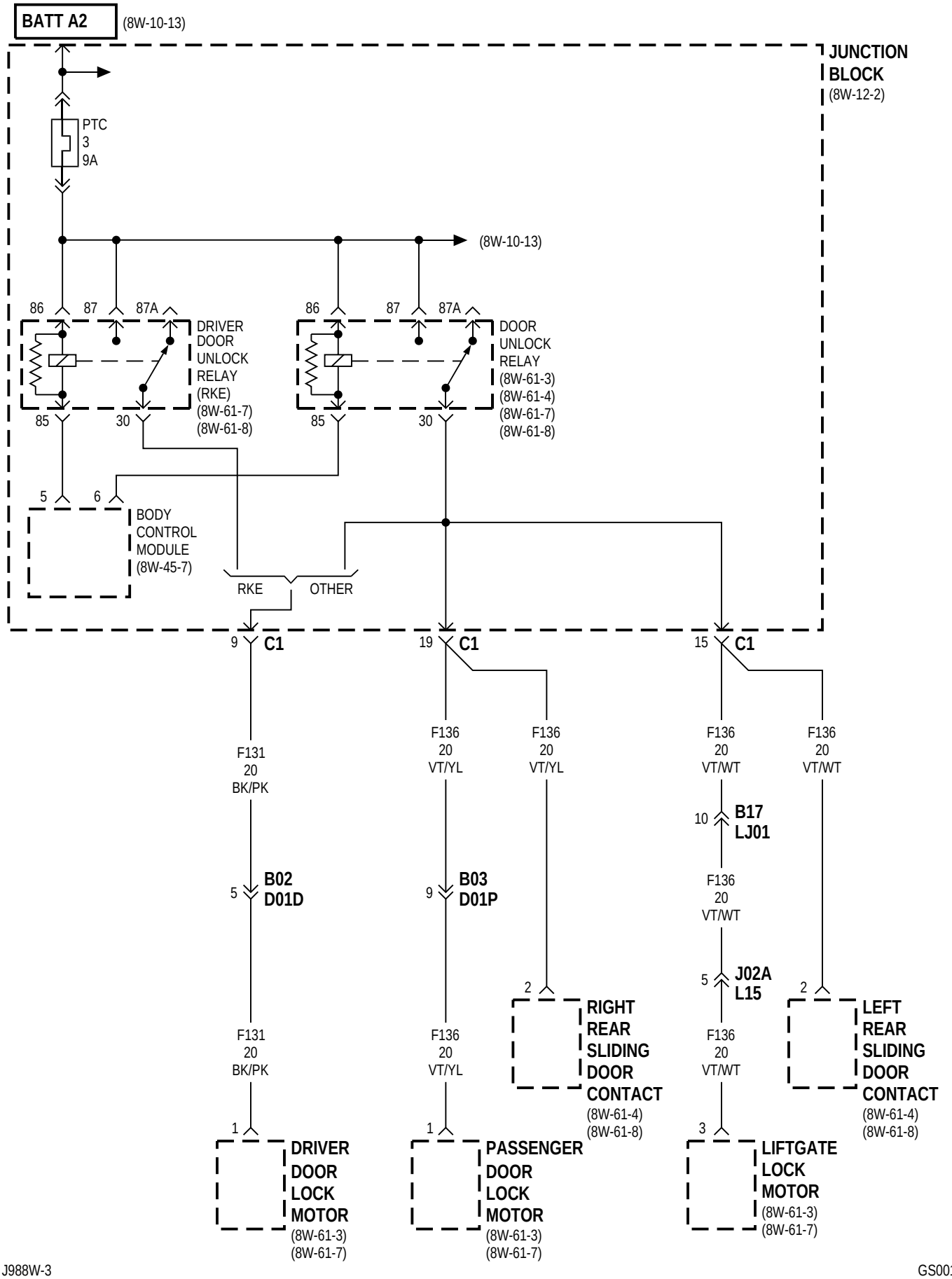
BATT A2
(8W-10-13)
JUNCTION BLOCK
(8W-12-2)
PTC
3
9A
(8W-10-13)
86
87
87A
DRIVER DOOR UNLOCK RELAY (RKE)
(8W-61-7)
(8W-61-8)
85
30
DOOR UNLOCK RELAY
(8W-61-3)
(8W-61-4)
(8W-61-7)
(8W-61-8)
5
6
BODY CONTROL MODULE
(8W-45-7)
RKE
OTHER
9 C1
19 C1
15 C1
F131 20 BK/PK
B02 D01D
F131 20 BK/PK
1
DRIVER DOOR LOCK MOTOR
(8W-61-3)
(8W-61-7)
F136 20 VT/YL
B03 D01P
F136 20 VT/YL
2
RIGHT REAR SLIDING DOOR CONTACT
(8W-61-4)
(8W-61-8)
F136 20 VT/YL
1
PASSENGER DOOR LOCK MOTOR
(8W-61-3)
(8W-61-7)
F136 20 VT/WT
10
B17 LJ01
F136 20 VT/WT
5
J02A L15
F136 20 VT/WT
3
LIFTGATE LOCK MOTOR
(8W-61-3)
(8W-61-7)
F136 20 VT/WT
2
LEFT REAR SLIDING DOOR CONTACT
(8W-61-4)
(8W-61-8)

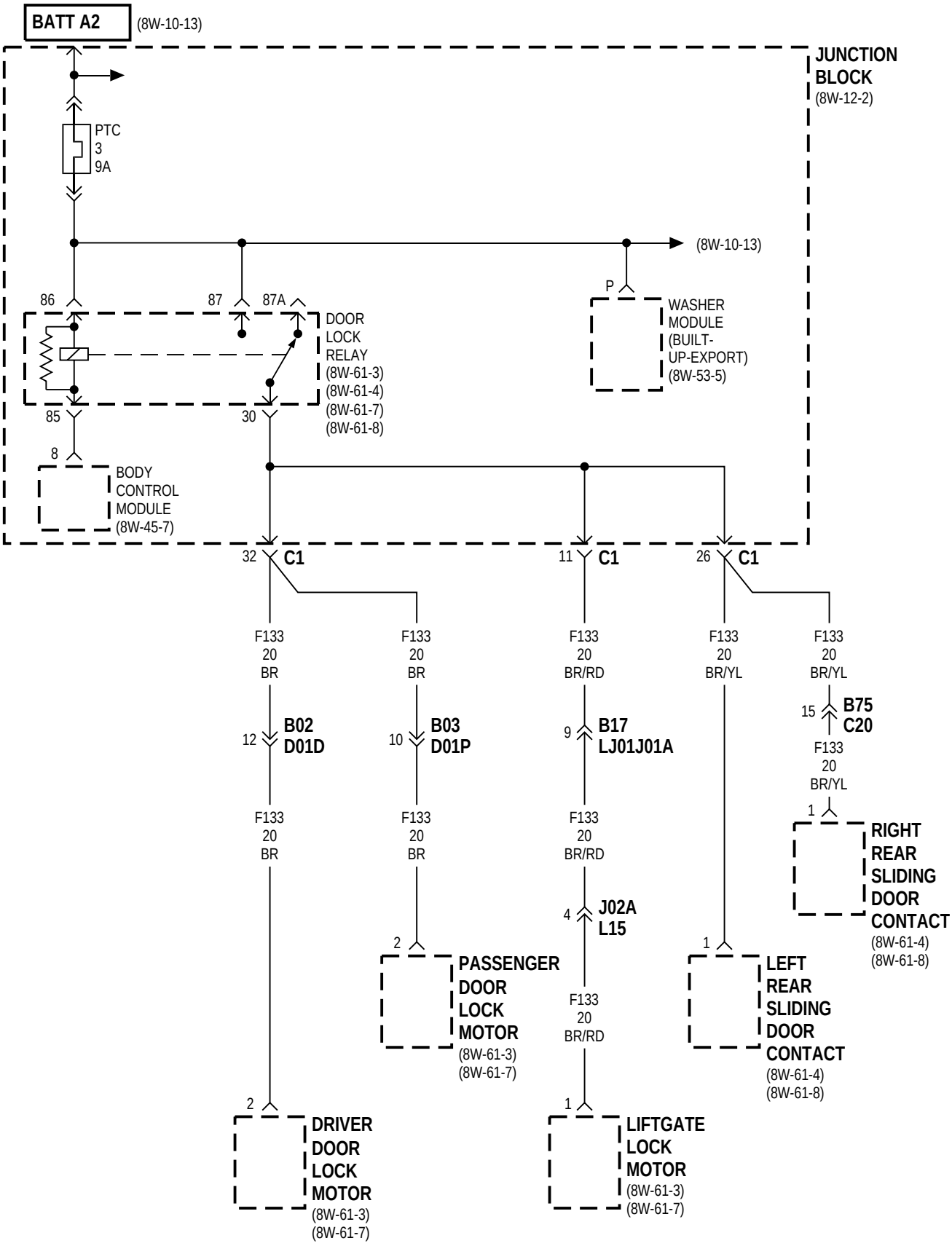
BATT A2
(8W-10-13)
JUNCTION BLOCK
(8W-12-2)
PTC
3
9A
(8W-10-13)
86
87
87A
DOOR LOCK RELAY
(8W-61-3)
(8W-61-4)
(8W-61-7)
(8W-61-8)
P
WASHER MODULE
(BUILT-UP-EXPORT)
(8W-53-5)
85
30
8
BODY CONTROL MODULE
(8W-45-7)
32 C1
11 C1
26 C1
F133 20 BR
F133 20 BR
F133 20 BR/RD
F133 20 BR/YL
F133 20 BR/YL
12 B02 D01D
10 B03 D01P
9 B17 LJ01J01A
15 B75 C20
F133 20 BR/YL
1
RIGHT REAR SLIDING DOOR CONTACT
(8W-61-4)
(8W-61-8)
F133 20 BR
F133 20 BR
F133 20 BR/RD
4 J02A L15
2
PASSENGER DOOR LOCK MOTOR
(8W-61-3)
(8W-61-7)
1
LEFT REAR SLIDING DOOR CONTACT
(8W-61-4)
(8W-61-8)
F133 20 BR/RD
2
DRIVER DOOR LOCK MOTOR
(8W-61-3)
(8W-61-7)
1
LIFTGATE LOCK MOTOR
(8W-61-3)
(8W-61-7)

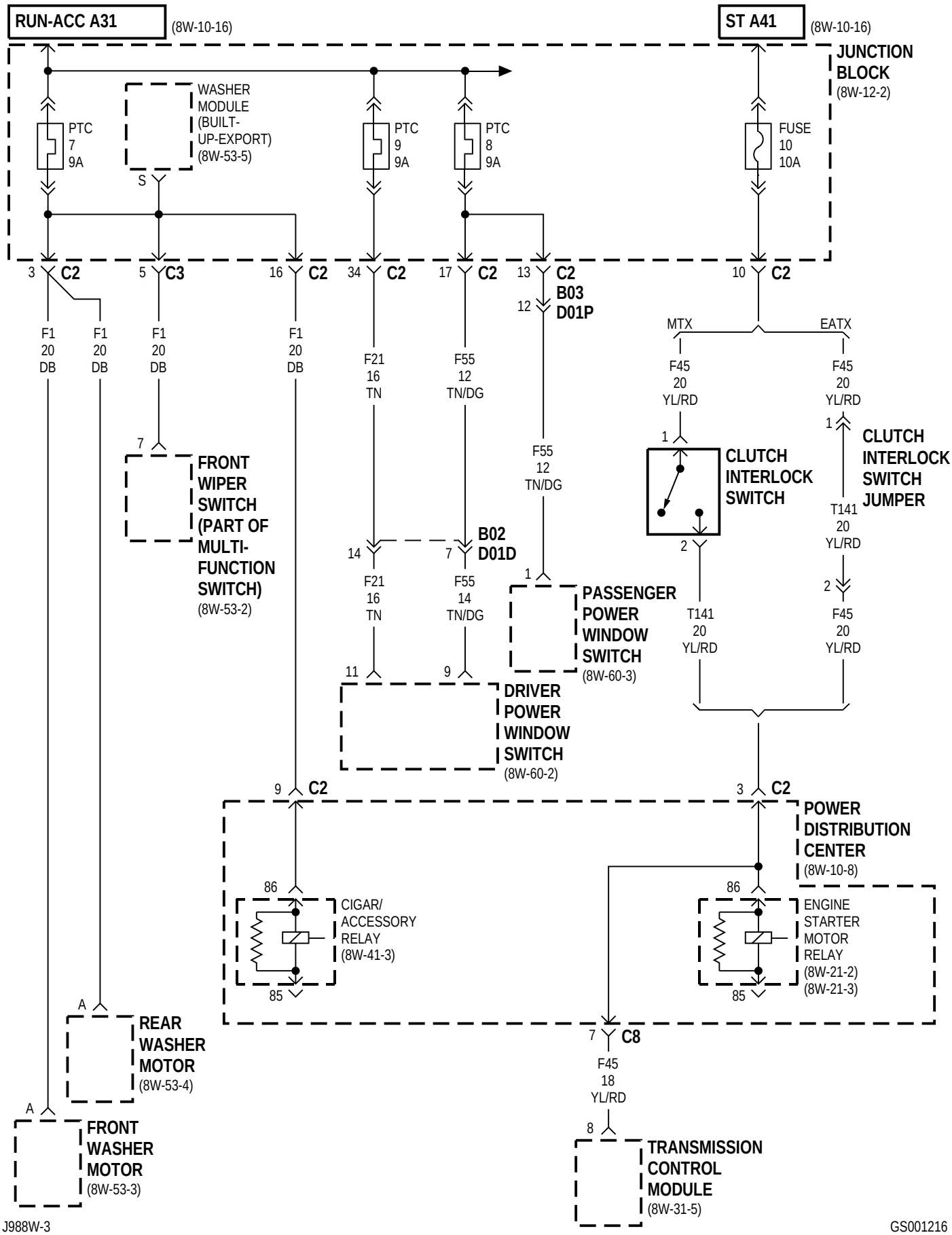

J988W-3

GS001216

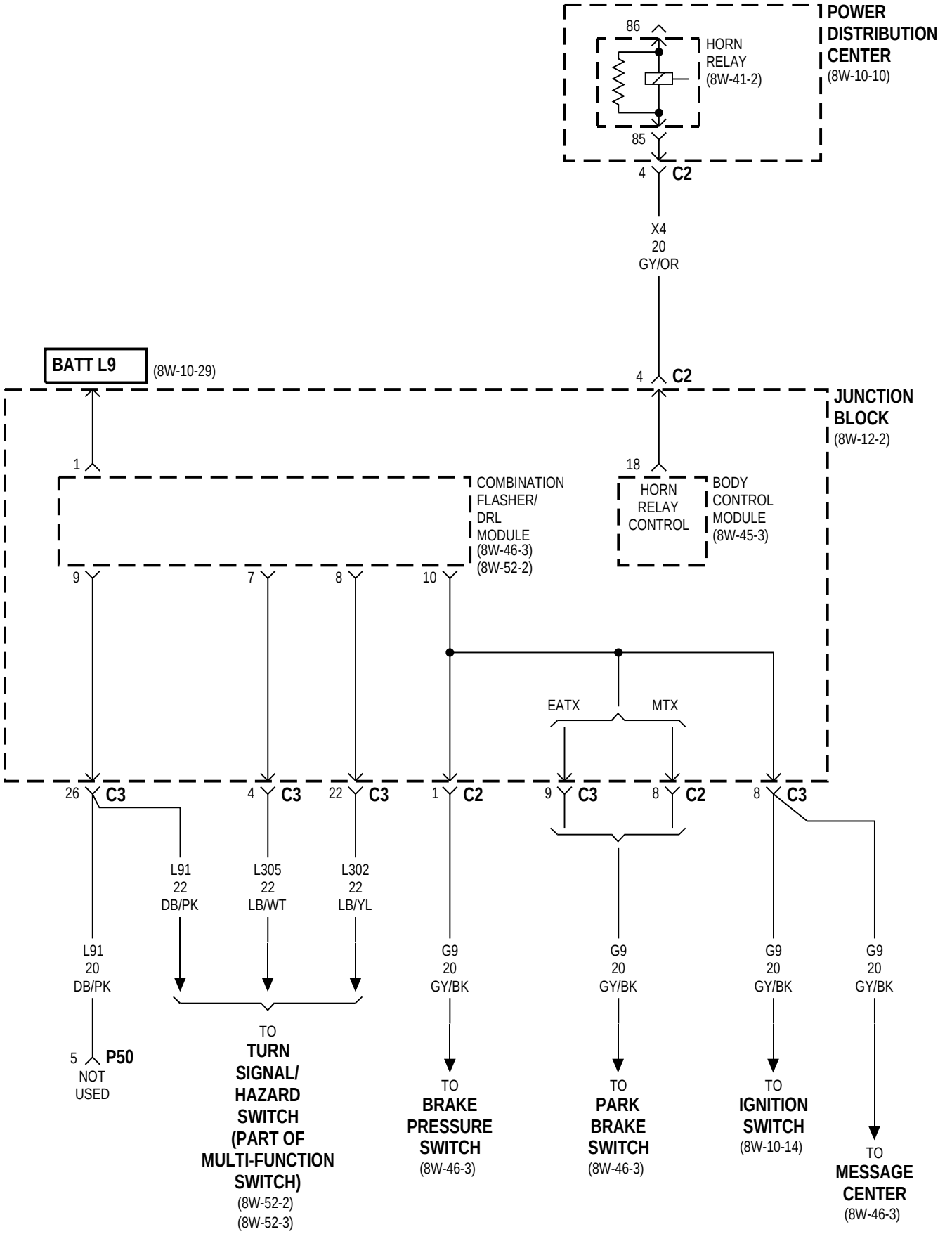
POWER DISTRIBUTION CENTER
(8W-10-10)
86
HORN RELAY
(8W-41-2)
85
4 C2
X4
20
GY/OR
4 C2
BATT L9
(8W-10-29)
JUNCTION BLOCK
(8W-12-2)
1
18
COMBINATION FLASHER/ DRL MODULE
(8W-46-3)
(8W-52-2)
HORN RELAY CONTROL
BODY CONTROL MODULE
(8W-45-3)
9
7
8
10
EATX
MTX
26 C3
4 C3
22 C3
1 C2
9 C3
8 C2
8 C3
L91
22
DB/PK
L305
22
LB/WT
L302
22
LB/YL
L91
20
DB/PK
G9
20
GY/BK
G9
20
GY/BK
G9
20
GY/BK
G9
20
GY/BK
5 P50
NOT USED
TO
TURN SIGNAL/ HAZARD SWITCH (PART OF MULTI-FUNCTION SWITCH)
(8W-52-2)
(8W-52-3)
TO
BRAKE PRESSURE SWITCH
(8W-46-3)
TO
PARK BRAKE SWITCH
(8W-46-3)
TO
IGNITION SWITCH
(8W-10-14)
TO
MESSAGE CENTER
(8W-46-3)

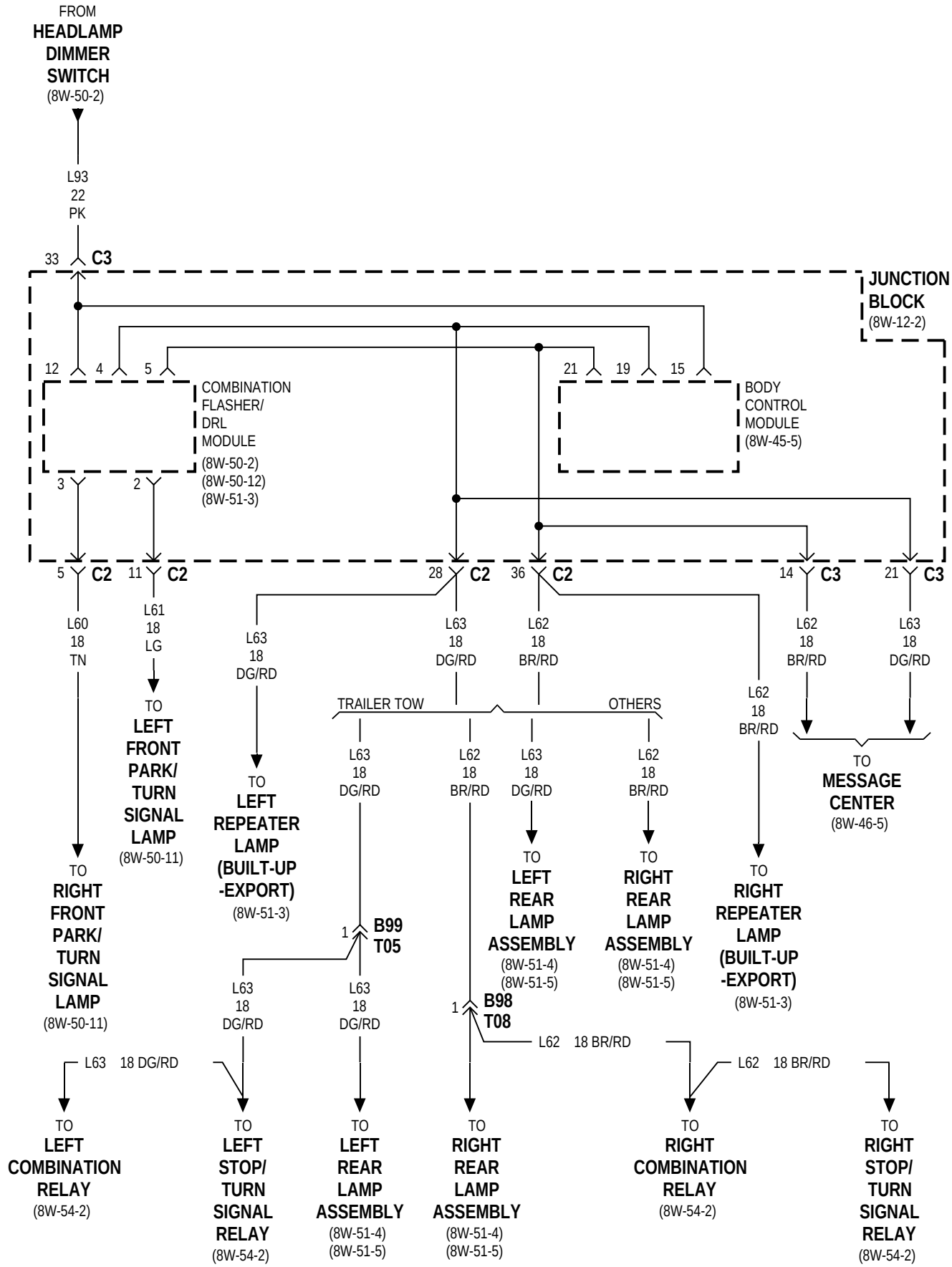
FROM
HEADLAMP DIMMER SWITCH
(8W-50-2)
L93
22
PK
33 C3
JUNCTION BLOCK
(8W-12-2)
12 4 5
COMBINATION FLASHER/ DRL MODULE
(8W-50-2)
(8W-50-12)
(8W-51-3)
21 19 15
BODY CONTROL MODULE
(8W-45-5)
3 2
5 C2
11 C2
28 C2
36 C2
14 C3
21 C3
L60
18
TN
L61
18
LG
L63
18
DG/RD
L63
18
DG/RD
L62
18
BR/RD
L62
18
BR/RD
L63
18
DG/RD
TRAILER TOW
OTHERS
L62
18
BR/RD
TO
LEFT FRONT PARK/ TURN SIGNAL LAMP
(8W-50-11)
TO
LEFT REPEATER LAMP (BUILT-UP -EXPORT)
(8W-51-3)
TO
MESSAGE CENTER
(8W-46-5)
L63
18
DG/RD
L62
18
BR/RD
L63
18
DG/RD
L62
18
BR/RD
TO
RIGHT FRONT PARK/ TURN SIGNAL LAMP
(8W-50-11)
1 B99 T05
TO
LEFT REAR LAMP ASSEMBLY
(8W-51-4)
(8W-51-5)
TO
RIGHT REAR LAMP ASSEMBLY
(8W-51-4)
(8W-51-5)
TO
RIGHT REPEATER LAMP (BUILT-UP -EXPORT)
(8W-51-3)
L63
18
DG/RD
L63
18
DG/RD
1 B98 T08
L62 18 BR/RD
L62 18 BR/RD
L63 18 DG/RD
TO
LEFT COMBINATION RELAY
(8W-54-2)
TO
LEFT STOP/ TURN SIGNAL RELAY
(8W-54-2)
TO
LEFT REAR LAMP ASSEMBLY
(8W-51-4)
(8W-51-5)
TO
RIGHT REAR LAMP ASSEMBLY
(8W-51-4)
(8W-51-5)
TO
RIGHT COMBINATION RELAY
(8W-54-2)
TO
RIGHT STOP/ TURN SIGNAL RELAY
(8W-54-2)

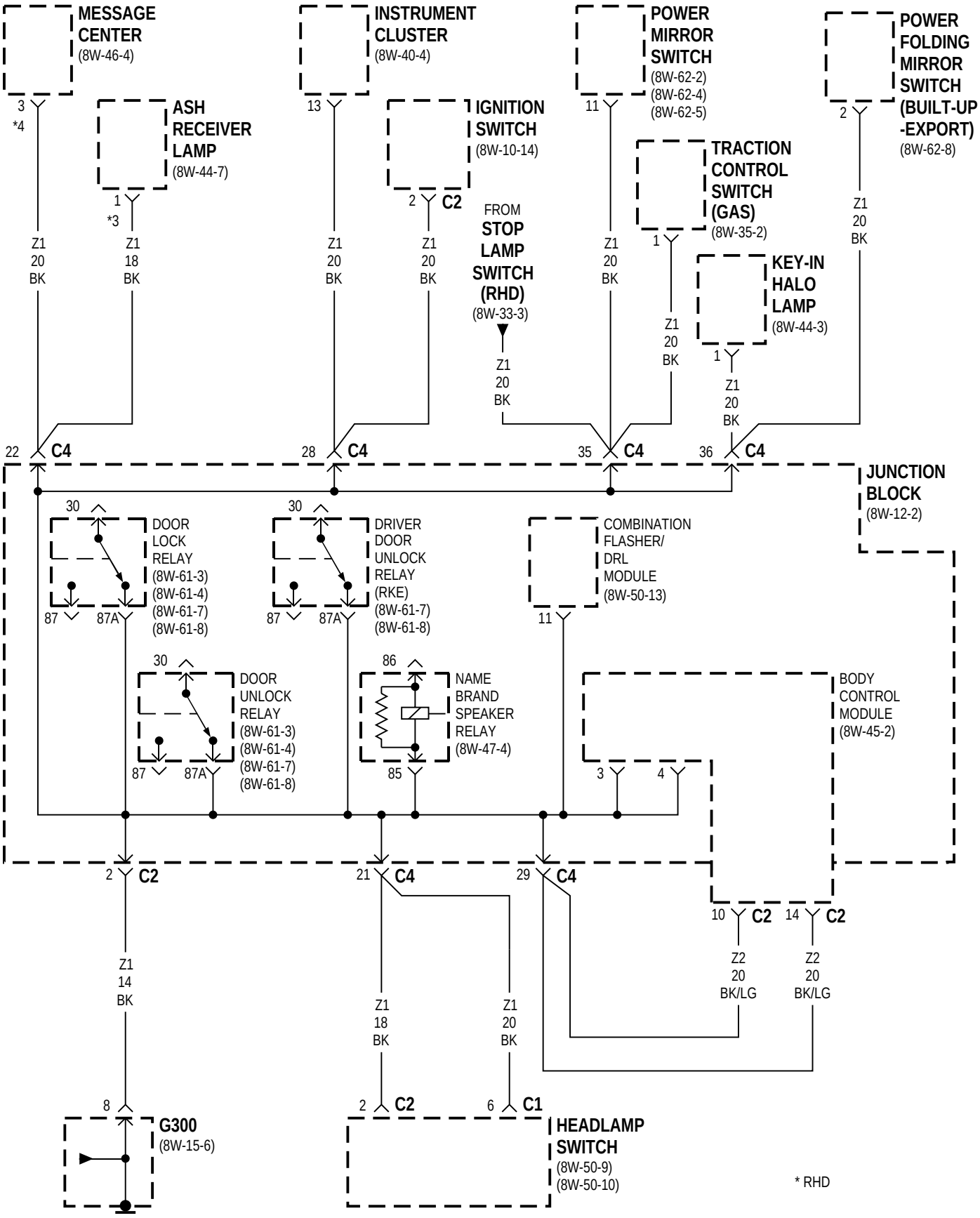
MESSAGE CENTER (8W-46-4)
INSTRUMENT CLUSTER (8W-40-4)
POWER MIRROR SWITCH (8W-62-2) (8W-62-4) (8W-62-5)
POWER FOLDING MIRROR SWITCH (BUILT-UP -EXPORT) (8W-62-8)
ASH RECEIVER LAMP (8W-44-7)
IGNITION SWITCH (8W-10-14)
TRACTION CONTROL SWITCH (GAS) (8W-35-2)
KEY-IN HALO LAMP (8W-44-3)
FROM STOP LAMP SWITCH (RHD) (8W-33-3)
JUNCTION BLOCK (8W-12-2)
DOOR LOCK RELAY (8W-61-3) (8W-61-4) (8W-61-7) (8W-61-8)
DRIVER DOOR UNLOCK RELAY (RKE) (8W-61-7) (8W-61-8)
COMBINATION FLASHER/ DRL MODULE (8W-50-13)
DOOR UNLOCK RELAY (8W-61-3) (8W-61-4) (8W-61-7) (8W-61-8)
NAME BRAND SPEAKER RELAY (8W-47-4)
BODY CONTROL MODULE (8W-45-2)
G300 (8W-15-6)
HEADLAMP SWITCH (8W-50-9) (8W-50-10)
* RHD

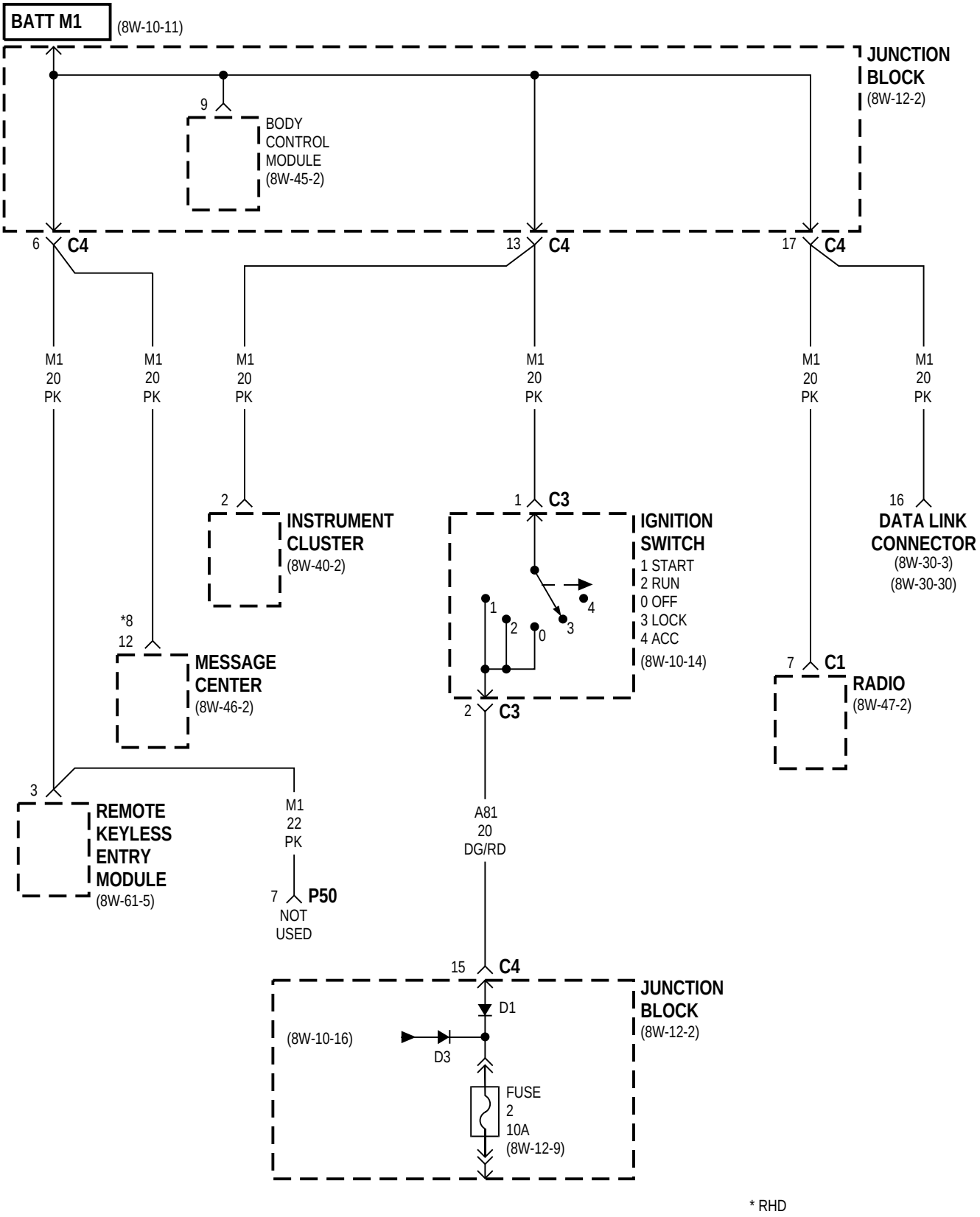
BATT M1
(8W-10-11)
JUNCTION BLOCK
(8W-12-2)
9
BODY CONTROL MODULE
(8W-45-2)
6 C4
13 C4
17 C4
M1 20 PK
M1 20 PK
M1 20 PK
M1 20 PK
M1 20 PK
M1 20 PK
2
INSTRUMENT CLUSTER
(8W-40-2)
1 C3
IGNITION SWITCH
1 START
2 RUN
0 OFF
3 LOCK
4 ACC
(8W-10-14)
2 C3
16
DATA LINK CONNECTOR
(8W-30-3)
(8W-30-30)
*8
12
MESSAGE CENTER
(8W-46-2)
7 C1
RADIO
(8W-47-2)
3
REMOTE KEYLESS ENTRY MODULE
(8W-61-5)
M1 22 PK
7 P50
NOT USED
A81 20 DG/RD
15 C4
JUNCTION BLOCK
(8W-12-2)
D1
(8W-10-16)
D3
FUSE 2 10A
(8W-12-9)
* RHD

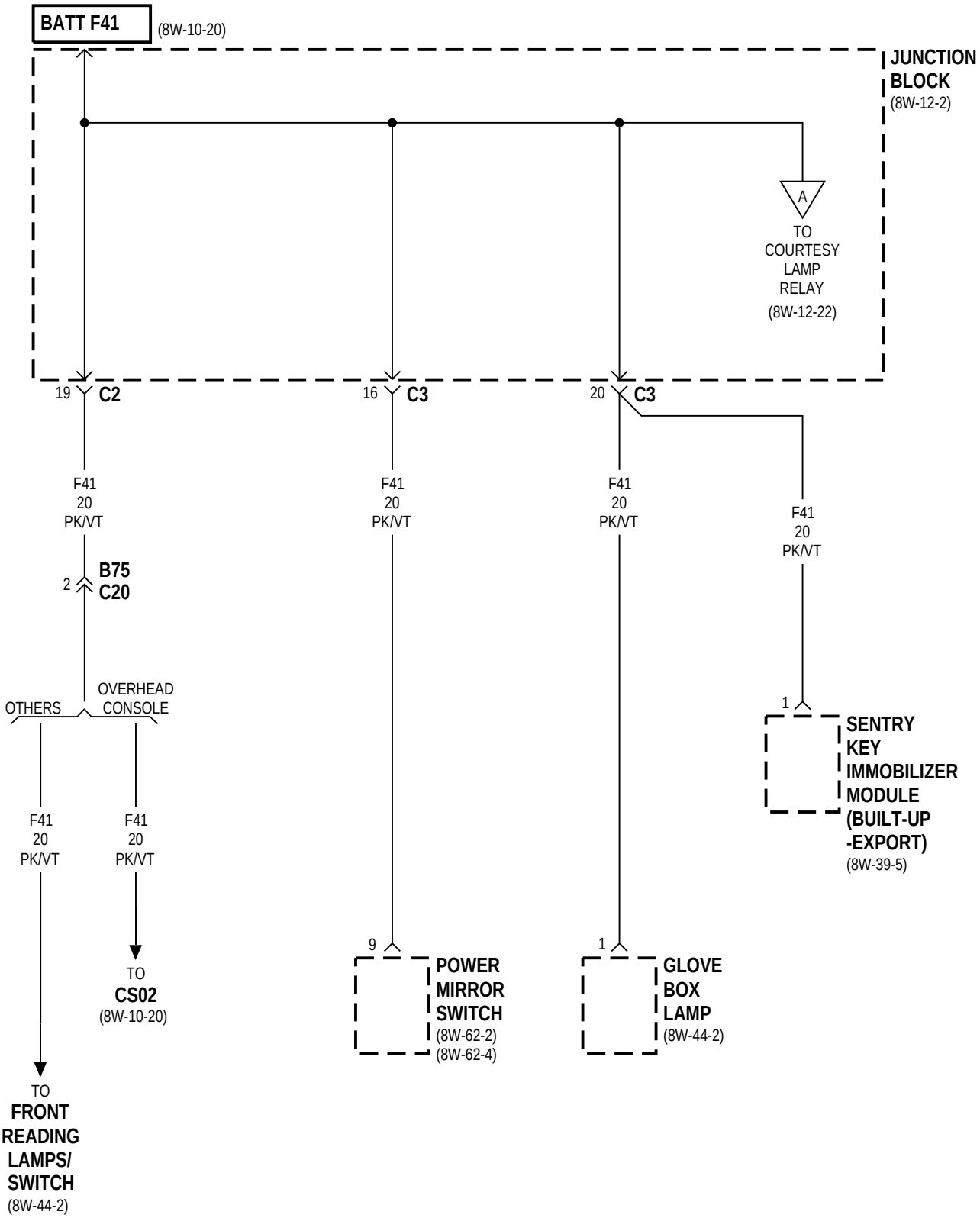
BATT F41
(8W-10-20)
JUNCTION BLOCK
(8W-12-2)
A
TO COURTESY LAMP RELAY
(8W-12-22)
19 C2
16 C3
20 C3
F41 20 PK/VT
F41 20 PK/VT
F41 20 PK/VT
F41 20 PK/VT
2 B75 C20
OTHERS
OVERHEAD CONSOLE
F41 20 PK/VT
F41 20 PK/VT
TO CS02
(8W-10-20)
TO FRONT READING LAMPS/ SWITCH
(8W-44-2)
1
SENTRY KEY IMMOBILIZER MODULE (BUILT-UP -EXPORT)
(8W-39-5)
9
POWER MIRROR SWITCH
(8W-62-2)
(8W-62-4)
1
GLOVE BOX LAMP
(8W-44-2)

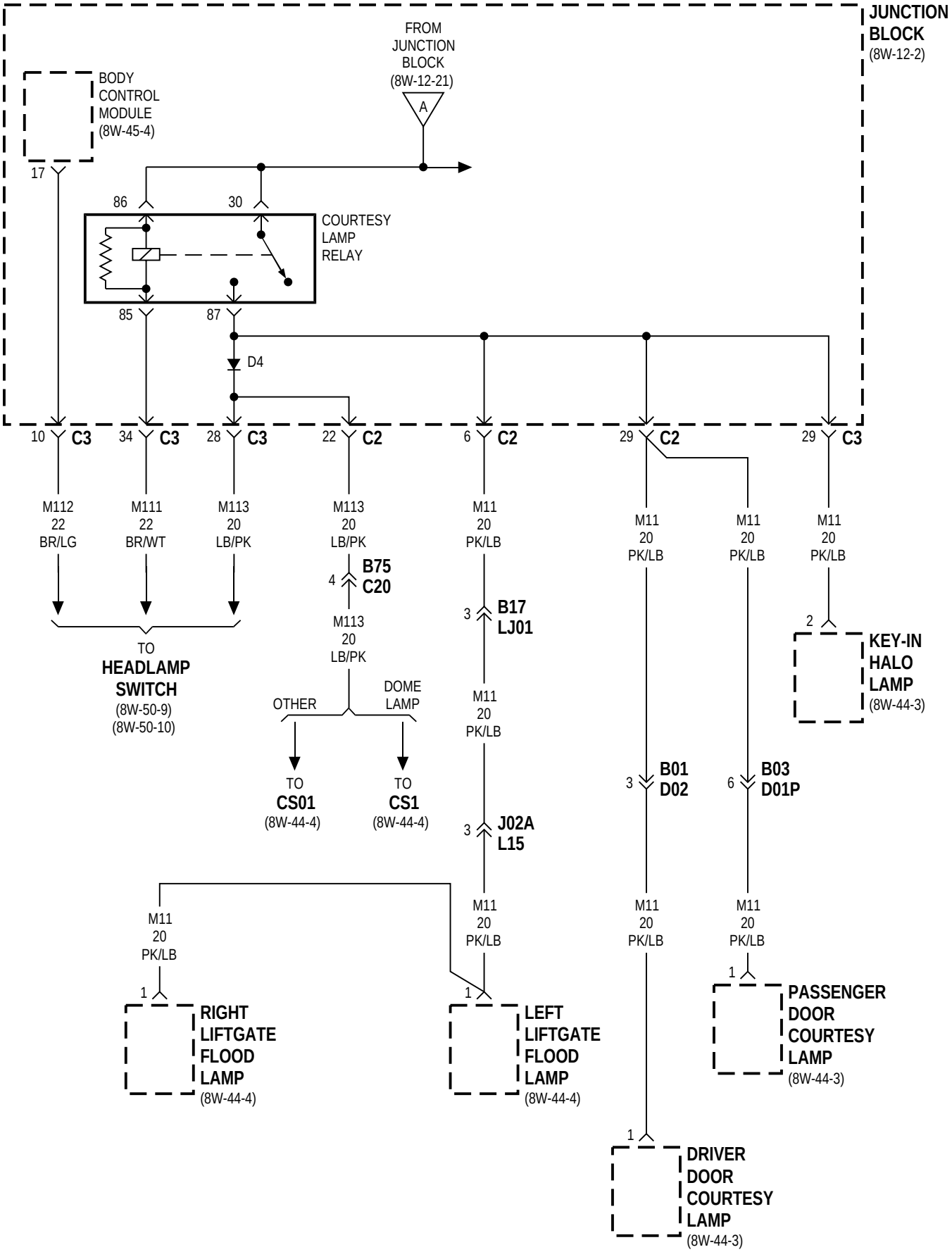
JUNCTION BLOCK (8W-12-2)
FROM JUNCTION BLOCK (8W-12-21)
A
BODY CONTROL MODULE (8W-45-4)
17
86
30
COURTESY LAMP RELAY
85
87
D4
10 C3
34 C3
28 C3
22 C2
6 C2
29 C2
29 C3
M112 22 BR/LG
M111 22 BR/WT
M113 20 LB/PK
M113 20 LB/PK
4 B75 C20
M113 20 LB/PK
TO HEADLAMP SWITCH (8W-50-9) (8W-50-10)
OTHER
DOME LAMP
TO CS01 (8W-44-4)
TO CS1 (8W-44-4)
M11 20 PK/LB
3 B17 LJ01
M11 20 PK/LB
3 J02A L15
M11 20 PK/LB
M11 20 PK/LB
M11 20 PK/LB
M11 20 PK/LB
2
KEY-IN HALO LAMP (8W-44-3)
3 B01 D02
6 B03 D01P
M11 20 PK/LB
1
RIGHT LIFTGATE FLOOD LAMP (8W-44-4)
M11 20 PK/LB
1
LEFT LIFTGATE FLOOD LAMP (8W-44-4)
M11 20 PK/LB
1
PASSENGER DOOR COURTESY LAMP (8W-44-3)
1
DRIVER DOOR COURTESY LAMP (8W-44-3)

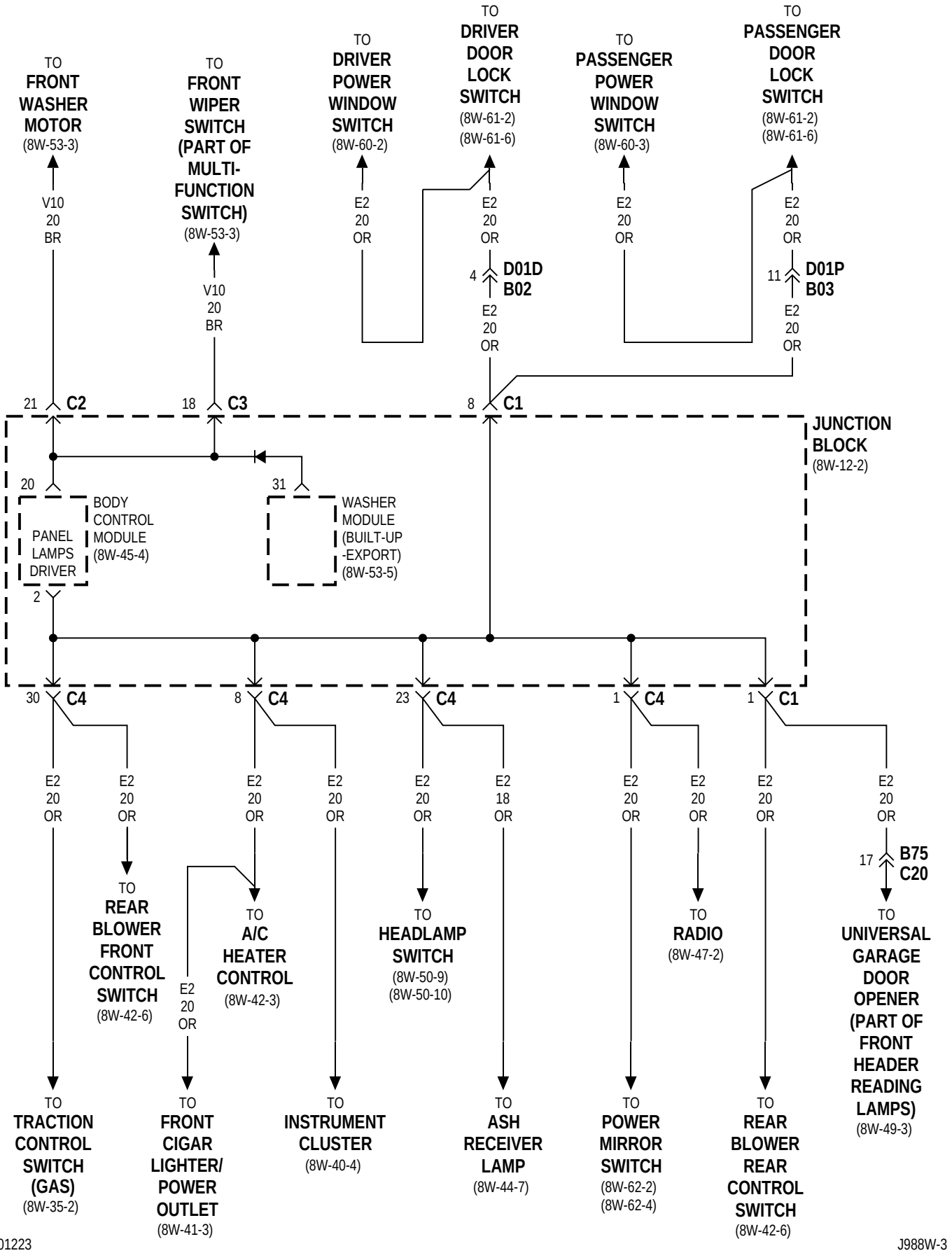
TO FRONT WASHER MOTOR (8W-53-3)
V10 20 BR
TO FRONT WIPER SWITCH (PART OF MULTI-FUNCTION SWITCH) (8W-53-3)
V10 20 BR
TO DRIVER POWER WINDOW SWITCH (8W-60-2)
E2 20 OR
TO DRIVER DOOR LOCK SWITCH (8W-61-2) (8W-61-6)
E2 20 OR
4 D01D B02
E2 20 OR
TO PASSENGER POWER WINDOW SWITCH (8W-60-3)
E2 20 OR
TO PASSENGER DOOR LOCK SWITCH (8W-61-2) (8W-61-6)
E2 20 OR
11 D01P B03
E2 20 OR
21 C2
18 C3
8 C1
JUNCTION BLOCK (8W-12-2)
20
PANEL LAMPS DRIVER
BODY CONTROL MODULE (8W-45-4)
31
WASHER MODULE (BUILT-UP -EXPORT) (8W-53-5)
2
30 C4
8 C4
23 C4
1 C4
1 C1
E2 20 OR
E2 20 OR
TO REAR BLOWER FRONT CONTROL SWITCH (8W-42-6)
E2 20 OR
TO A/C HEATER CONTROL (8W-42-3)
E2 20 OR
E2 20 OR
TO INSTRUMENT CLUSTER (8W-40-4)
E2 20 OR
E2 18 OR
TO HEADLAMP SWITCH (8W-50-9) (8W-50-10)
E2 20 OR
E2 20 OR
TO RADIO (8W-47-2)
E2 20 OR
E2 20 OR
17 B75 C20
TO UNIVERSAL GARAGE DOOR OPENER (PART OF FRONT HEADER READING LAMPS) (8W-49-3)
TO TRACTION CONTROL SWITCH (GAS) (8W-35-2)
TO FRONT CIGAR LIGHTER/ POWER OUTLET (8W-41-3)
TO ASH RECEIVER LAMP (8W-44-7)
TO POWER MIRROR SWITCH (8W-62-2) (8W-62-4)
TO REAR BLOWER REAR CONTROL SWITCH (8W-42-6)

BUILT-UP-EXPORT

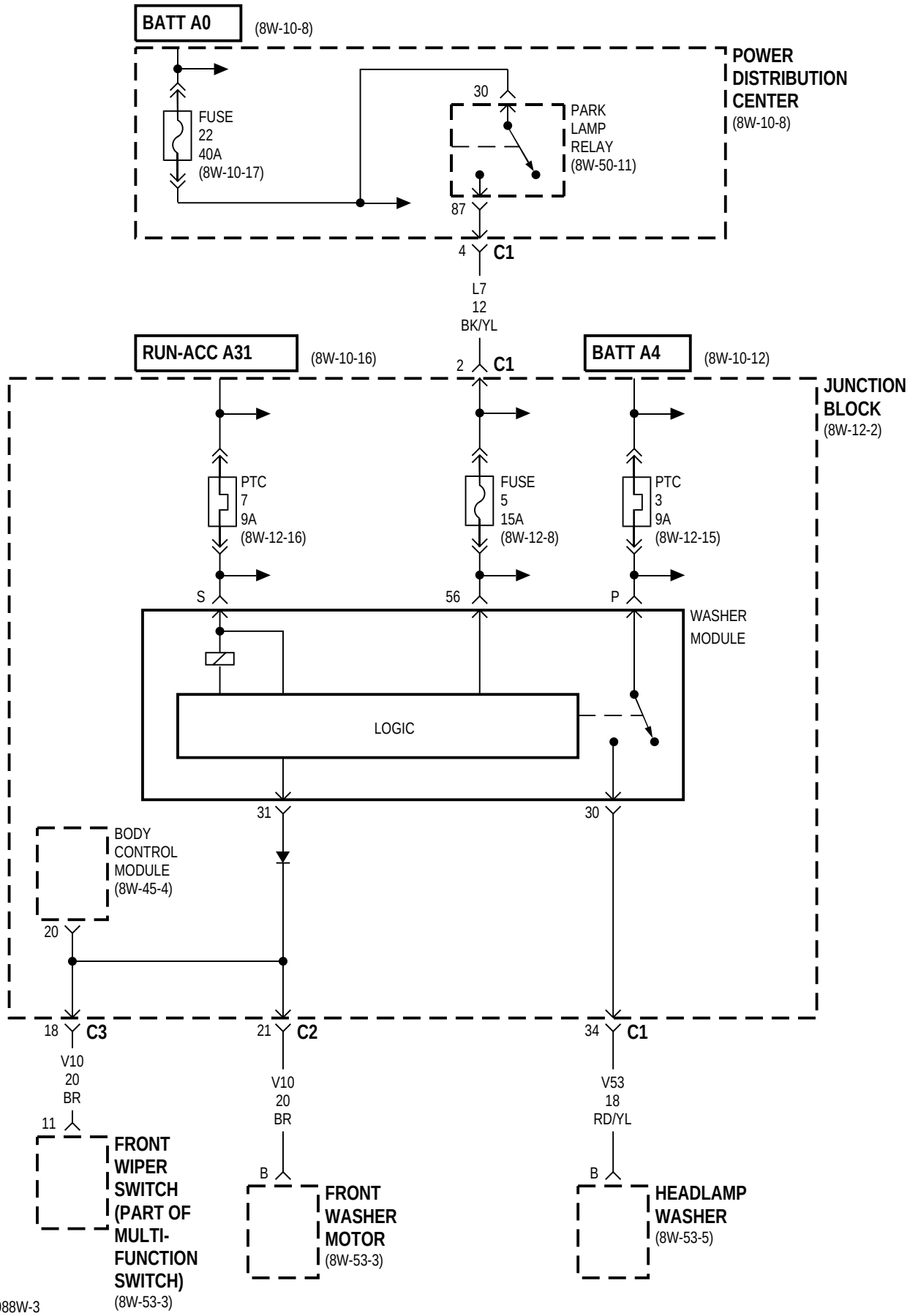

EXCEPT BUILT-UP-EXPORT/CHRYSLER

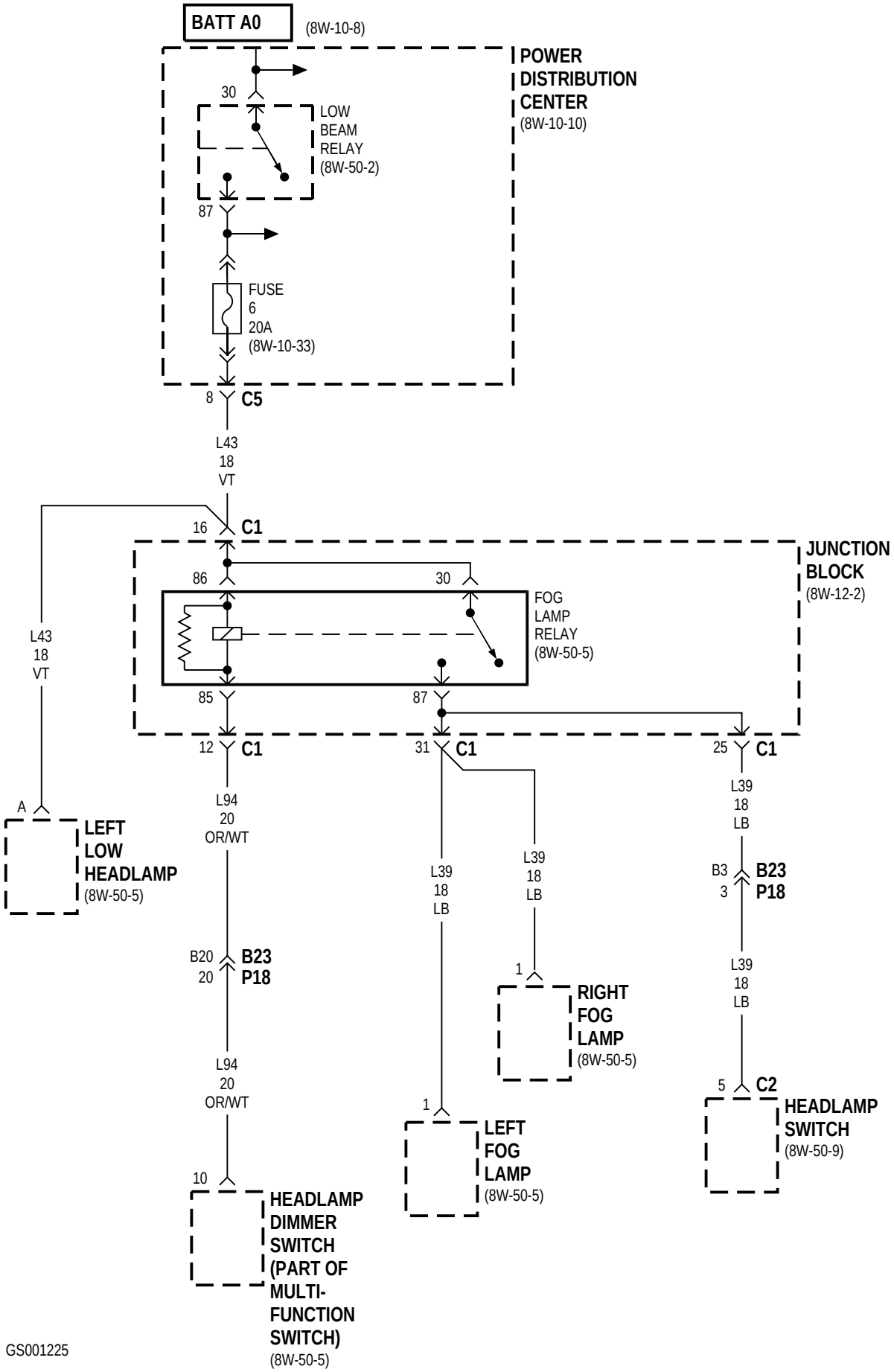

BUILT-UP-EXPORT

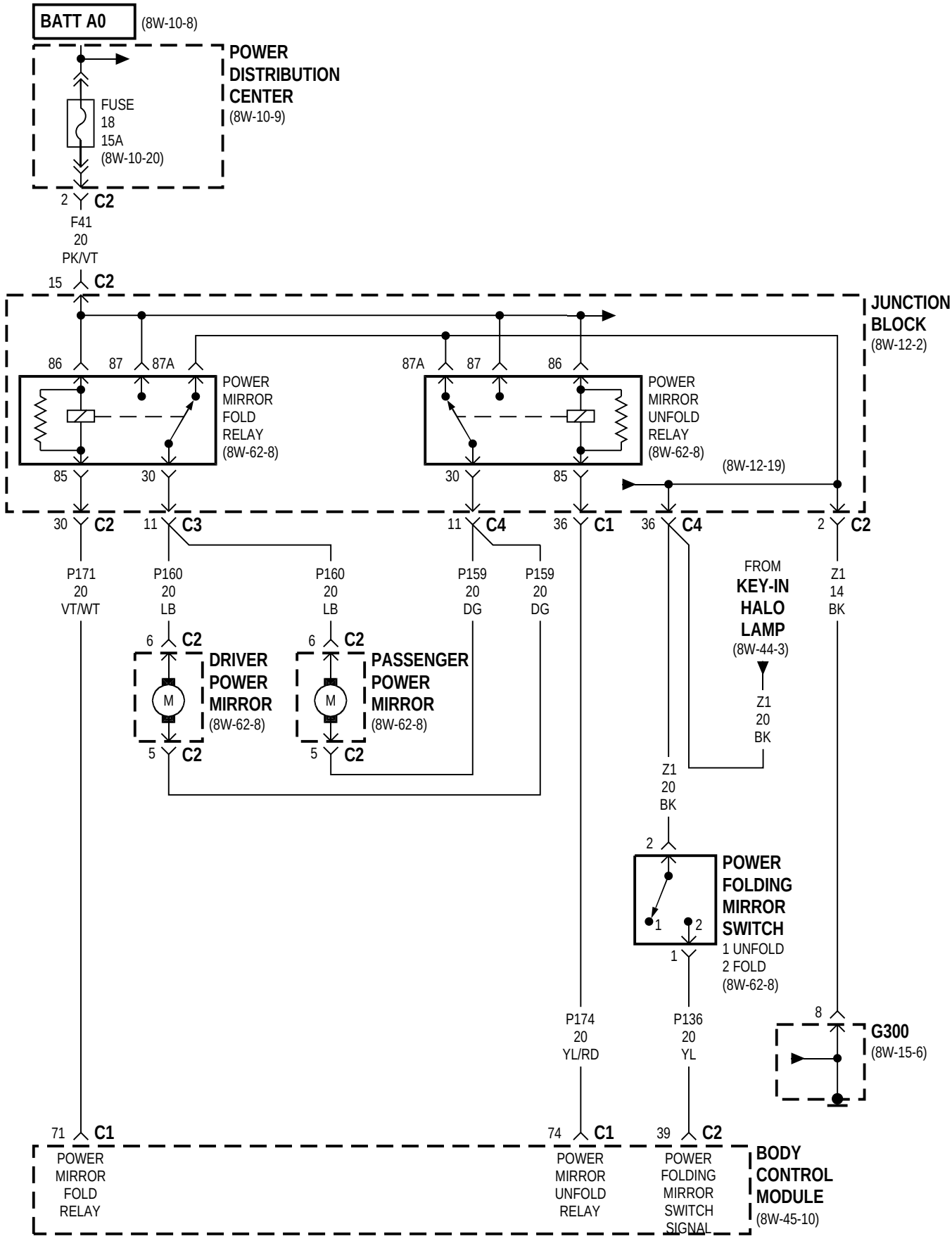

8W-15 GROUND DISTRIBUTION

Component	Page
A/C Compressor Clutch	8W-15-2, 3
A/C Heater Control	8W-15-4
Airbag Control Module	8W-15-4
All Wheel Drive Solenoid	8W-15-13
Ash Receiver Lamp	8W-15-6
Automatic Day/Night Mirror	8W-15-5
AW4 B13	8W-15-13
AWS1	8W-15-13
Battery	8W-15-2, 3
Body Control Module	8W-15-6
Brake Pressure Switch	8W-15-8
BS08	8W-15-5
BS31	8W-15-3
BS40	8W-15-3
BS41	8W-15-3
Center High Mounted Stop Lamp	8W-15-14
Cigar/Accessory Relay	8W-15-7
Clockspring	8W-15-4
Clutch Switch	8W-15-8
Combination Flasher/DRL Module	8W-15-6
Controller Anti-Lock Brake	8W-15-4
Crank Case Heater	8W-15-3
CS06	8W-15-11, 12
Data Link Connector	8W-15-2, 4, 12
Door Lock Relay	8W-15-6
Door Unlock Relay	8W-15-6
Downstream Heated Oxygen Sensor	8W-15-5
Driver Door Arm/Disarm Switch	8W-15-11, 12
Driver Door Courtesy Lamp	8W-15-7
Driver Door Lock Switch	8W-15-11, 12
Driver Door Unlock Relay	8W-15-6
Driver Heated Seat Back	8W-15-9
Driver Heated Seat Cushion	8W-15-9
Driver Heated Seat Module	8W-15-9
Driver Heated Seat Switch	8W-15-9
Driver Power Mirror	8W-15-4
Driver Power Seat Switch	8W-15-5
Driver Power Window Switch	8W-15-7
DS01	8W-15-7
EC1 C19	8W-15-5
Engine Speed Sensor	8W-15-3
ES01	8W-15-3
ES02	8W-15-3
ES11	8W-15-2
ES12	8W-15-3
ES18	8W-15-2
ES23	8W-15-2
ES30	8W-15-3
ES31	8W-15-3
Front Blower Motor Relay	8W-15-7
Front Cigar Lighter/Power Outlet	8W-15-4
Fuel Heater	8W-15-3
Fuel Heater Relay	8W-15-3
Fuel Tank Module	8W-15-13
G100	8W-15-2, 3
G101	8W-15-2
G102	8W-15-2, 3
G103	8W-15-2, 3
G104	8W-15-4
G200	8W-15-4
G201	8W-15-4
G202	8W-15-5
G204	8W-15-4
G300	8W-15-5, 6, 7, 8, 9
G301	8W-15-10, 11, 12
G302	8W-15-13
G400	8W-15-14
Headlamp Dimmer Switch	8W-15-4
Headlamp Switch	8W-15-4, 6
Headlamp Washer	8W-15-10
High Note Horn	8W-15-11, 12
Hood Ajar Switch	8W-15-10
HS1	8W-15-9
HS3	8W-15-9
HS5D B09	8W-15-9
HS5P B56	8W-15-9
Ignition Switch	8W-15-4, 6
Instrument Cluster	8W-15-4, 6
Junction Block	8W-15-6
Key-In Halo Lamp	8W-15-6
Left Combination Relay	8W-15-13
Left Door Speaker	8W-15-5
Left Front Park/Turn Signal Lamp	8W-15-7
Left Headlamp	8W-15-8
Left Headlamp Leveling Motor	8W-15-8
Left High Headlamp	8W-15-8
Left Liftgate Flood Lamp	8W-15-14
Left Low Headlamp	8W-15-8
Left Rear Door Ajar Switch	8W-15-13
Left Rear Lamp Assembly	8W-15-13
Left Rear Speaker	8W-15-5
Left Repeater Lamp	8W-15-5
Left Speed Control Switch	8W-15-4
Left Stop/Turn Signal Relay	8W-15-13
License Lamp	8W-15-14
Liftgate Ajar Switch	8W-15-14
Liftgate Arm/Disarm Switch	8W-15-14
Low Coolant Level Switch	8W-15-3
Low Note Horn	8W-15-10
Low Washer Fluid Switch	8W-15-11, 12
Memory Power Seat Switch	8W-15-5, 9
Memory Seat/Mirror Module	8W-15-5, 9
Memory Set Switch	8W-15-7
Message Center	8W-15-6
Name Brand Speaker Relay	8W-15-6
Needle Movement Sensor	8W-15-3
Overhead Console	8W-15-11, 12
Passenger Door Arm/Disarm Switch	8W-15-10
Passenger Door Courtesy Lamp	8W-15-7
Passenger Door Lock Switch	8W-15-10
Passenger Heated Seat Back	8W-15-9
Passenger Heated Seat Cushion	8W-15-9
Passenger Heated Seat Module	8W-15-9
Passenger Heated Seat Switch	8W-15-9
Passenger Power Mirror	8W-15-4
Passenger Power Seat Switch	8W-15-5, 12
Passenger Power Window Switch	8W-15-7
Power Distribution Center	8W-15-2, 3, 7
Power Folding Mirror Switch	8W-15-6
Power Mirror Switch	8W-15-6
Powertrain Control Module	8W-15-2, 3
Radiator Fan Disconnect	8W-15-3
Radiator Fan No. 1	8W-15-2
Radiator Fan No. 2	8W-15-2
Radiator Fan Relay	8W-15-2
Radiator Fan Relay No. 1	8W-15-3
Radio	8W-15-5
Rear Blower Front Control Switch	8W-15-4
Rear Blower Rear Control Switch	8W-15-13
Rear Cigar Lighter/Power Outlet	8W-15-13
Rear Window Defogger	8W-15-14
Rear Wiper Motor	8W-15-14
Remote Keyless Entry Module	8W-15-4
RF3 E40	8W-15-2
RFS2	8W-15-2
Right Combination Relay	8W-15-13
Right Door Speaker	8W-15-5
Right Front Park/Turn Signal Lamp	8W-15-10
Right Headlamp	8W-15-10
Right Headlamp Leveling Motor	8W-15-10
Right High Headlamp	8W-15-10
Right Liftgate Flood Lamp	8W-15-14
Right Low Headlamp	8W-15-10
Right Rear Door Ajar Switch	8W-15-13
Right Rear Lamp Assembly	8W-15-13
Right Rear Speaker	8W-15-5
Right Repeater Lamp	8W-15-10
Right Speed Control Switch	8W-15-4
Right Stop/Turn Signal Relay	8W-15-13
Seat Belt Switch	8W-15-8
Sentry Key Immobilizer Module	8W-15-4
Stop Lamp Switch	8W-15-6, 7
Traction Control Switch	8W-15-6
Trailer Tow Connector	8W-15-13
Transmission Control Module	8W-15-2
Transmission Control Relay	8W-15-2
Universal Garage Door Opener	8W-15-11, 12
Upstream Heated Oxygen Sensor	8W-15-2
Vehicle Speed Control Servo	8W-15-2
Wiper Module	8W-15-5
Wiper On Relay	8W-15-7

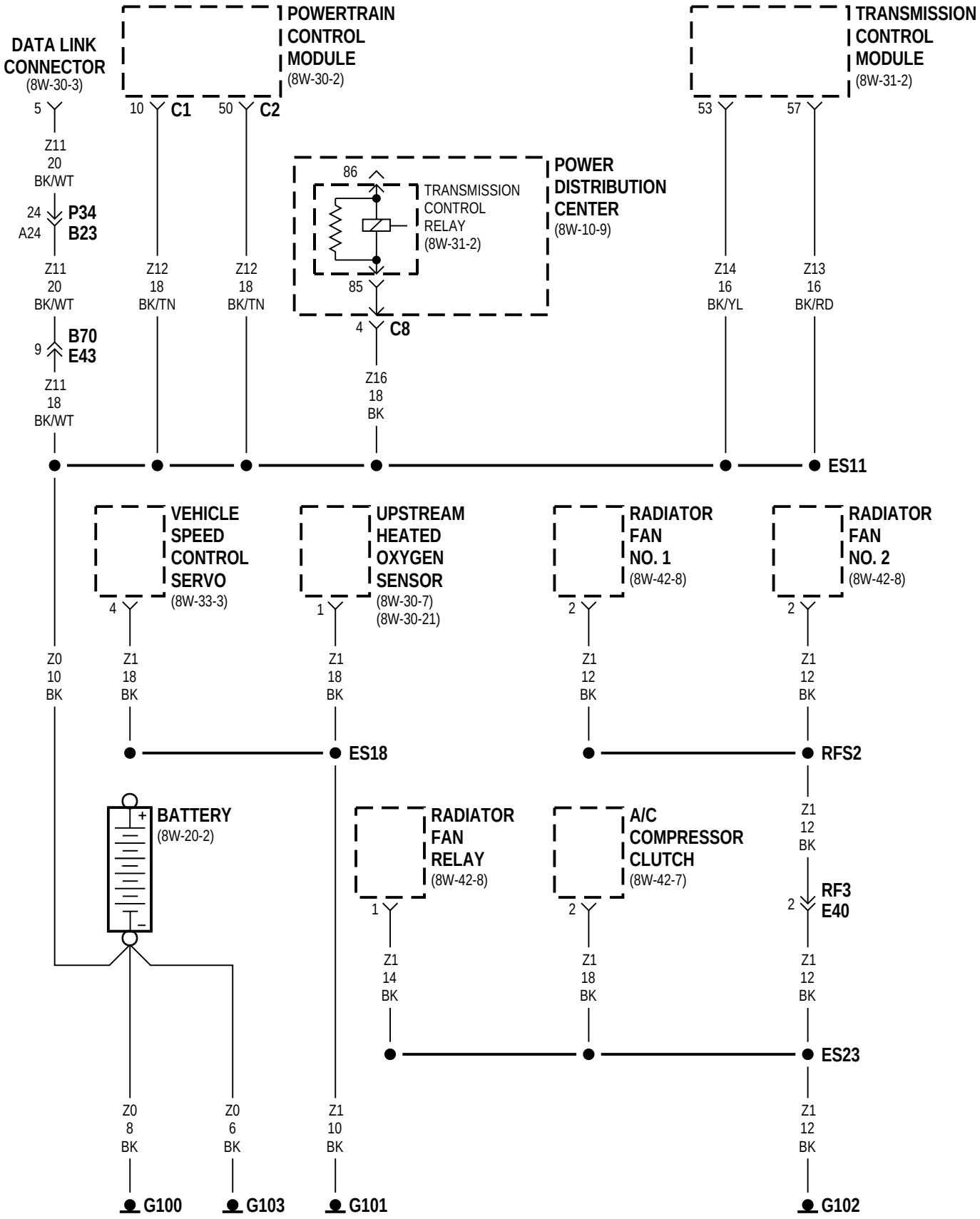
DATA LINK CONNECTOR
(8W-30-3)
5
Z11
20
BK/WT
24
A24
P34
B23
Z11
20
BK/WT
9
B70
E43
Z11
18
BK/WT
POWERTRAIN CONTROL MODULE
(8W-30-2)
10
C1
50
C2
Z12
18
BK/TN
Z12
18
BK/TN
86
TRANSMISSION CONTROL RELAY
(8W-31-2)
85
POWER DISTRIBUTION CENTER
(8W-10-9)
4
C8
Z16
18
BK
TRANSMISSION CONTROL MODULE
(8W-31-2)
53
57
Z14
16
BK/YL
Z13
16
BK/RD
ES11
VEHICLE SPEED CONTROL SERVO
(8W-33-3)
4
Z1
18
BK
UPSTREAM HEATED OXYGEN SENSOR
(8W-30-7)
(8W-30-21)
1
Z1
18
BK
RADIATOR FAN NO. 1
(8W-42-8)
2
Z1
12
BK
RADIATOR FAN NO. 2
(8W-42-8)
2
Z1
12
BK
Z0
10
BK
ES18
RFS2
BATTERY
(8W-20-2)
RADIATOR FAN RELAY
(8W-42-8)
1
Z1
14
BK
A/C COMPRESSOR CLUTCH
(8W-42-7)
2
Z1
18
BK
Z1
12
BK
RF3
E40
2
Z1
12
BK
ES23
Z0
8
BK
Z0
6
BK
Z1
10
BK
Z1
12
BK
G100
G103
G101
G102

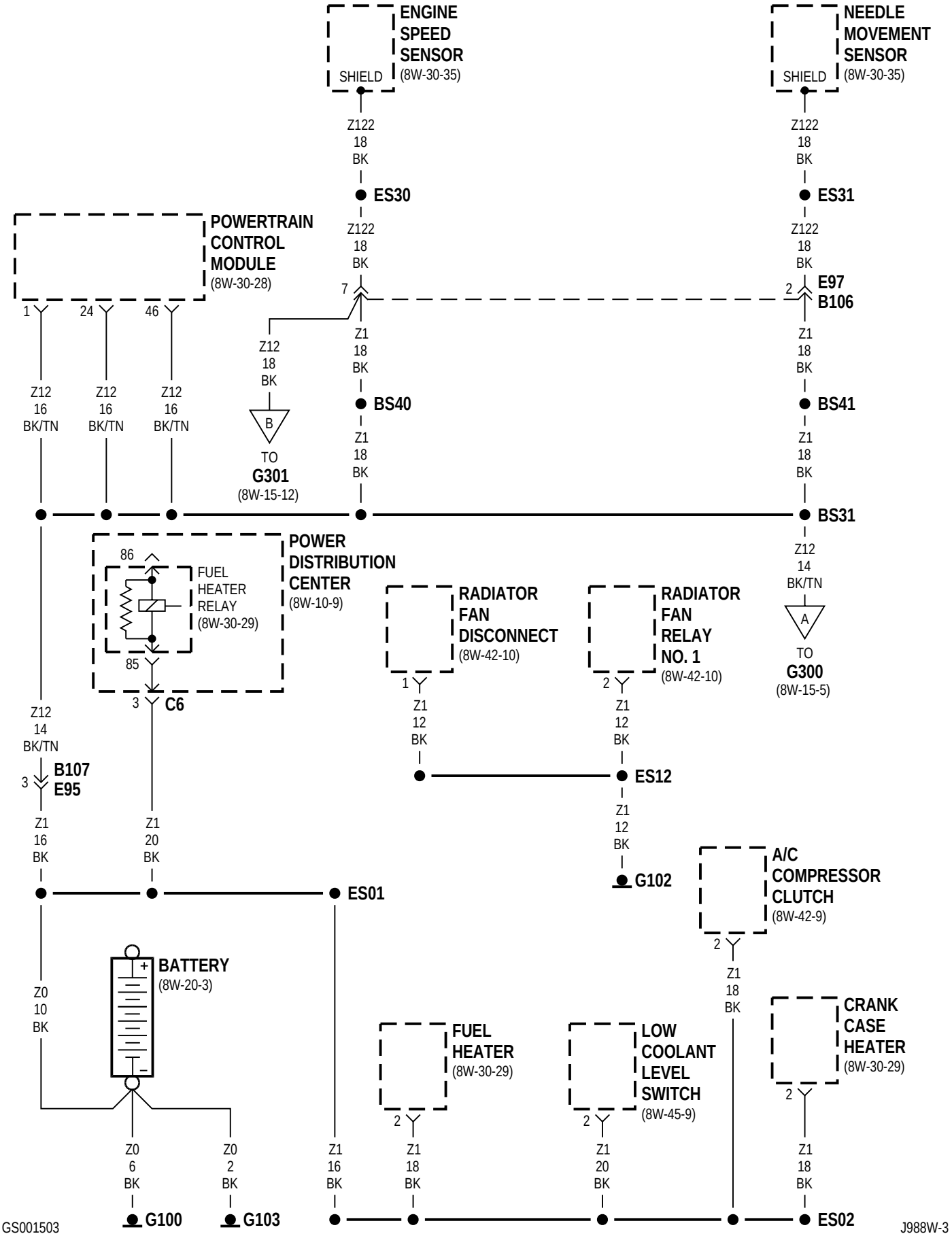
ENGINE SPEED SENSOR (8W-30-35)
SHIELD
NEEDLE MOVEMENT SENSOR (8W-30-35)
SHIELD
Z122 18 BK
ES30
ES31
POWERTRAIN CONTROL MODULE (8W-30-28)
1
24
46
7
2
E97
B106
Z12 16 BK/TN
Z12 18 BK
B
TO G301 (8W-15-12)
Z1 18 BK
BS40
BS41
BS31
Z12 14 BK/TN
A
TO G300 (8W-15-5)
POWER DISTRIBUTION CENTER (8W-10-9)
86
85
FUEL HEATER RELAY (8W-30-29)
3
C6
RADIATOR FAN DISCONNECT (8W-42-10)
RADIATOR FAN RELAY NO. 1 (8W-42-10)
Z1 12 BK
ES12
G102
B107
E95
Z1 16 BK
Z1 20 BK
ES01
A/C COMPRESSOR CLUTCH (8W-42-9)
Z1 18 BK
BATTERY (8W-20-3)
Z0 10 BK
FUEL HEATER (8W-30-29)
LOW COOLANT LEVEL SWITCH (8W-45-9)
CRANK CASE HEATER (8W-30-29)
Z0 6 BK
Z0 2 BK
G100
G103
ES02

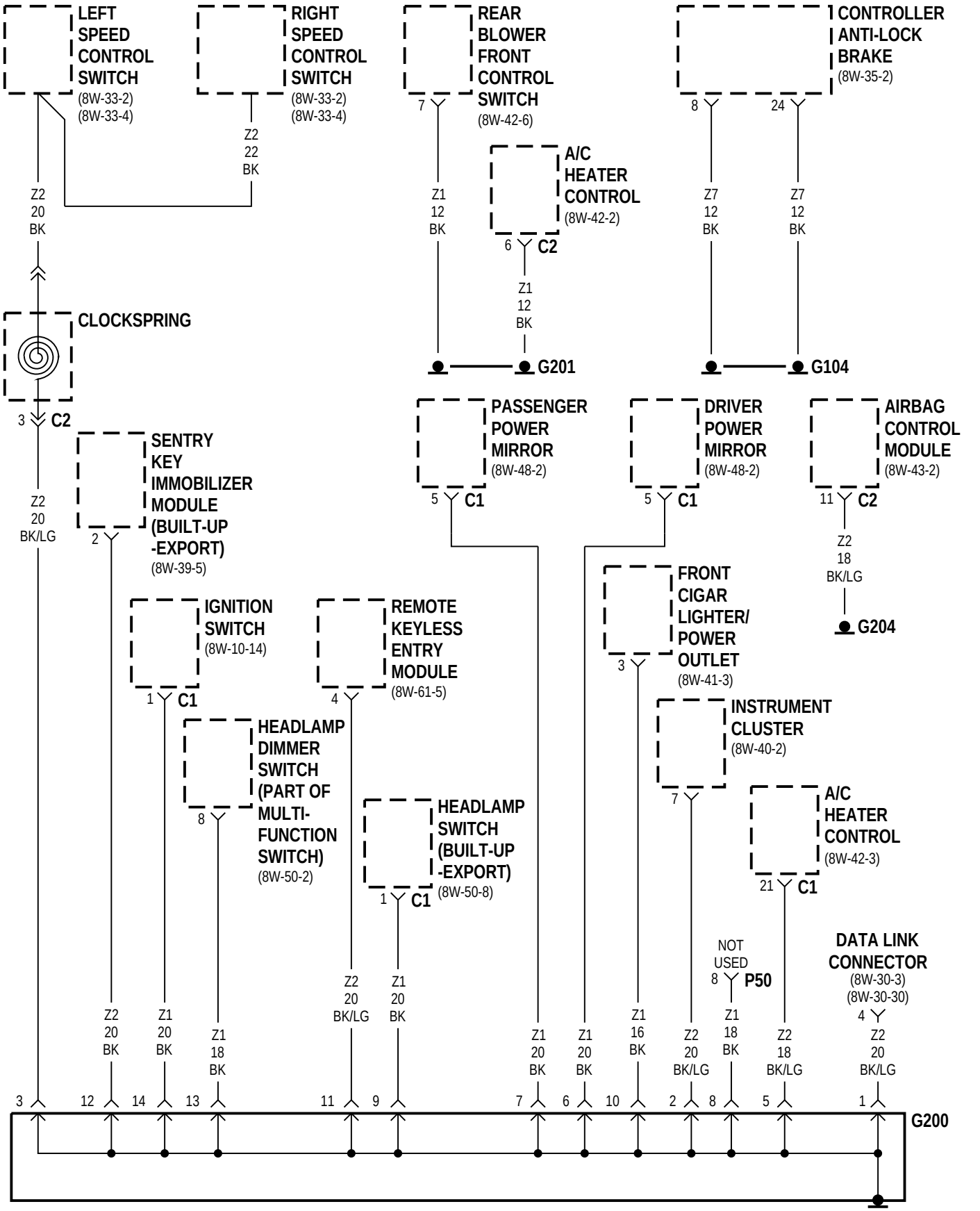
LEFT SPEED CONTROL SWITCH (8W-33-2) (8W-33-4)
RIGHT SPEED CONTROL SWITCH (8W-33-2) (8W-33-4)
REAR BLOWER FRONT CONTROL SWITCH (8W-42-6)
CONTROLLER ANTI-LOCK BRAKE (8W-35-2)
A/C HEATER CONTROL (8W-42-2)
CLOCKSPRING
SENTRY KEY IMMOBILIZER MODULE (BUILT-UP -EXPORT) (8W-39-5)
PASSENGER POWER MIRROR (8W-48-2)
DRIVER POWER MIRROR (8W-48-2)
AIRBAG CONTROL MODULE (8W-43-2)
IGNITION SWITCH (8W-10-14)
REMOTE KEYLESS ENTRY MODULE (8W-61-5)
FRONT CIGAR LIGHTER/ POWER OUTLET (8W-41-3)
HEADLAMP DIMMER SWITCH (PART OF MULTI-FUNCTION SWITCH) (8W-50-2)
INSTRUMENT CLUSTER (8W-40-2)
HEADLAMP SWITCH (BUILT-UP -EXPORT) (8W-50-8)
A/C HEATER CONTROL (8W-42-3)
DATA LINK CONNECTOR (8W-30-3) (8W-30-30)
NOT USED
P50
G201
G104
G204
G200
C1
C2

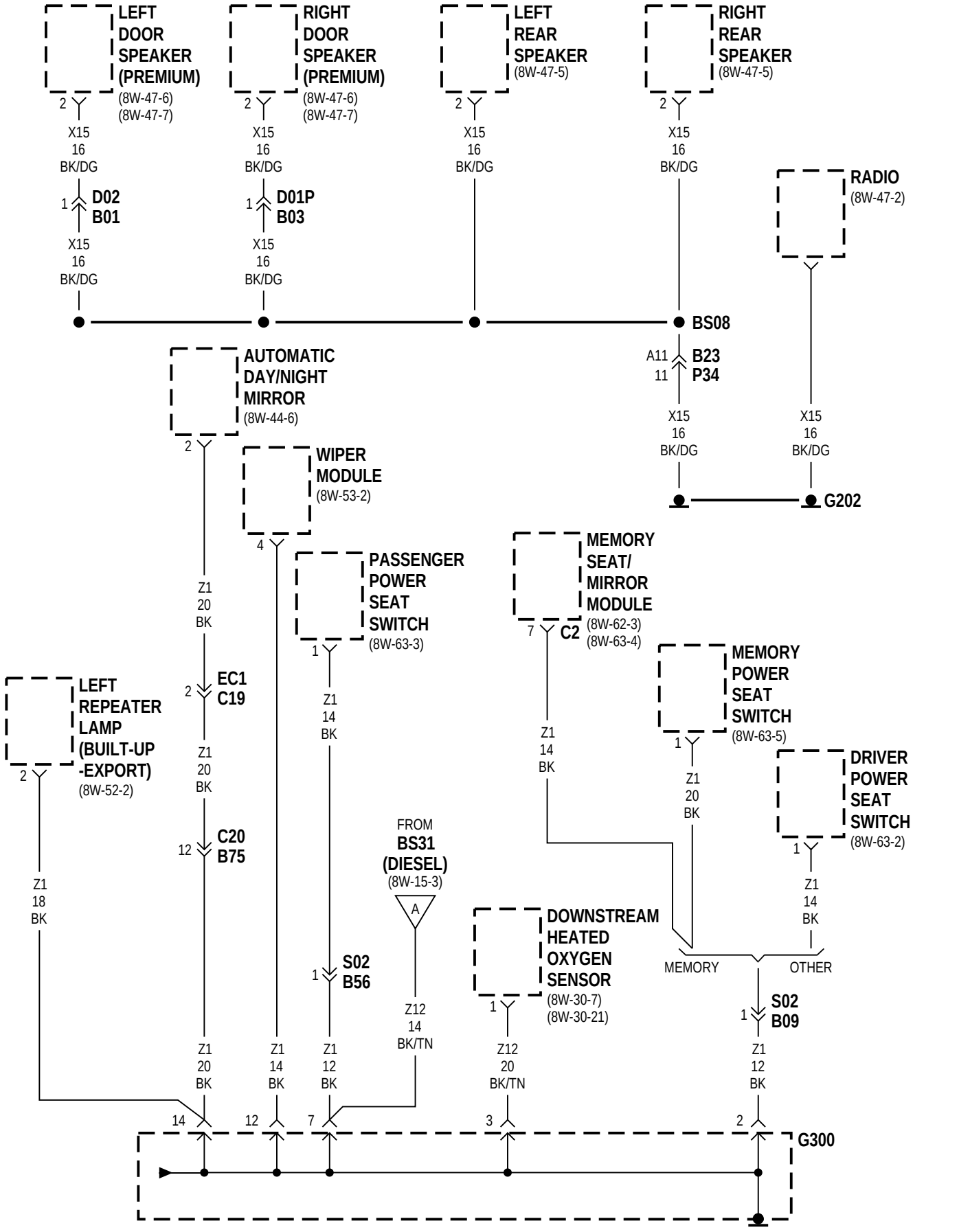
LEFT DOOR SPEAKER (PREMIUM)
(8W-47-6)
(8W-47-7)
RIGHT DOOR SPEAKER (PREMIUM)
(8W-47-6)
(8W-47-7)
LEFT REAR SPEAKER
(8W-47-5)
RIGHT REAR SPEAKER
(8W-47-5)
RADIO
(8W-47-2)
X15 16 BK/DG
D02 B01
D01P B03
BS08
A11 B23
11 P34
G202
AUTOMATIC DAY/NIGHT MIRROR
(8W-44-6)
WIPER MODULE
(8W-53-2)
PASSENGER POWER SEAT SWITCH
(8W-63-3)
MEMORY SEAT/ MIRROR MODULE
(8W-62-3)
(8W-63-4)
C2
MEMORY POWER SEAT SWITCH
(8W-63-5)
DRIVER POWER SEAT SWITCH
(8W-63-2)
LEFT REPEATER LAMP (BUILT-UP -EXPORT)
(8W-52-2)
EC1 C19
C20 B75
S02 B56
FROM BS31 (DIESEL)
(8W-15-3)
DOWNSTREAM HEATED OXYGEN SENSOR
(8W-30-7)
(8W-30-21)
S02 B09
MEMORY
OTHER
Z1 20 BK
Z1 14 BK
Z1 18 BK
Z1 12 BK
Z12 14 BK/TN
Z12 20 BK/TN
G300

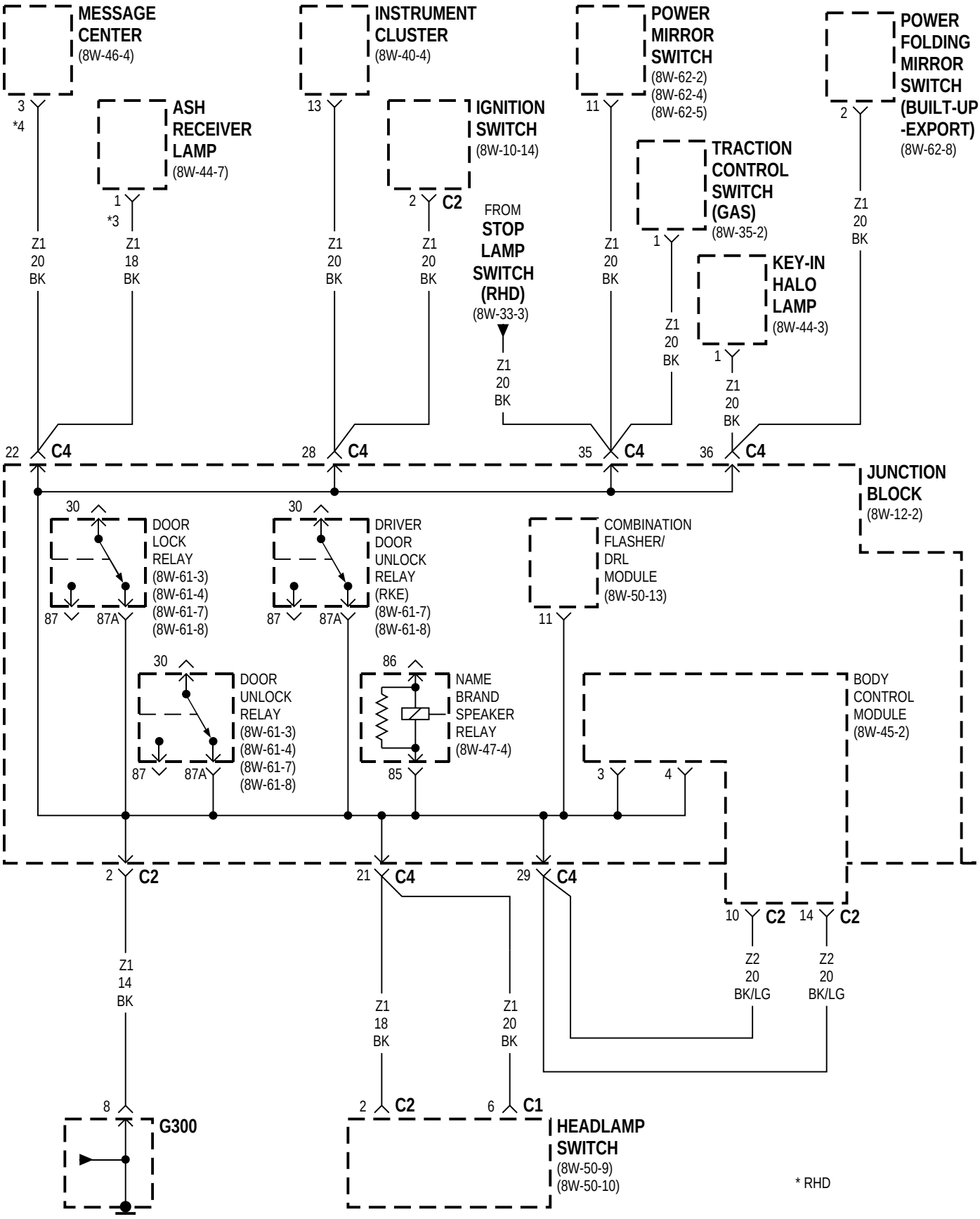
MESSAGE CENTER (8W-46-4)
INSTRUMENT CLUSTER (8W-40-4)
POWER MIRROR SWITCH (8W-62-2) (8W-62-4) (8W-62-5)
POWER FOLDING MIRROR SWITCH (BUILT-UP -EXPORT) (8W-62-8)
ASH RECEIVER LAMP (8W-44-7)
IGNITION SWITCH (8W-10-14)
TRACTION CONTROL SWITCH (GAS) (8W-35-2)
KEY-IN HALO LAMP (8W-44-3)
FROM STOP LAMP SWITCH (RHD) (8W-33-3)
JUNCTION BLOCK (8W-12-2)
DOOR LOCK RELAY (8W-61-3) (8W-61-4) (8W-61-7) (8W-61-8)
DRIVER DOOR UNLOCK RELAY (RKE) (8W-61-7) (8W-61-8)
COMBINATION FLASHER/ DRL MODULE (8W-50-13)
DOOR UNLOCK RELAY (8W-61-3) (8W-61-4) (8W-61-7) (8W-61-8)
NAME BRAND SPEAKER RELAY (8W-47-4)
BODY CONTROL MODULE (8W-45-2)
G300
HEADLAMP SWITCH (8W-50-9) (8W-50-10)
* RHD

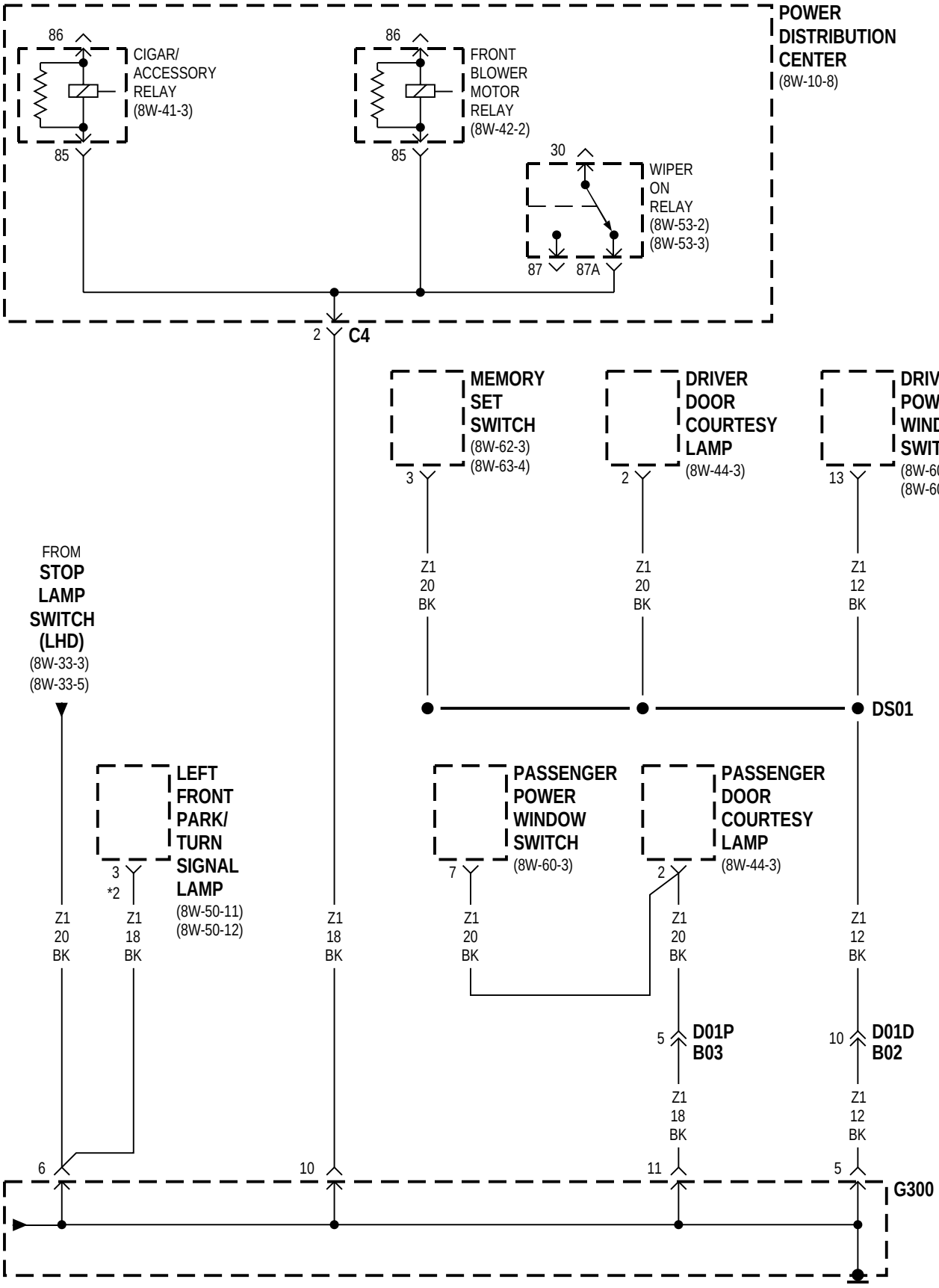

* BUILT-UP-EXPORT

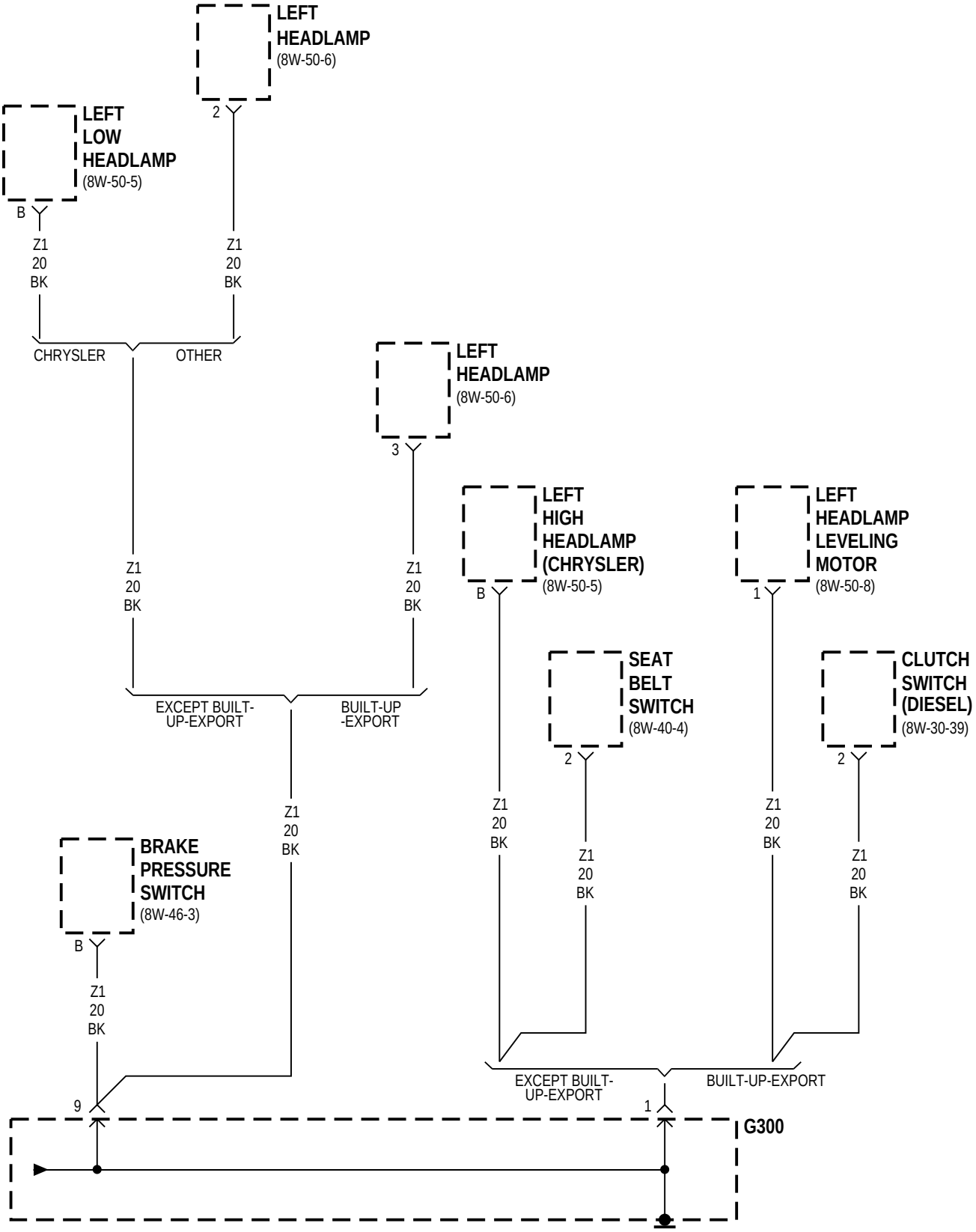
LEFT HEADLAMP (8W-50-6)
2
LEFT LOW HEADLAMP (8W-50-5)
B
Z1 20 BK
Z1 20 BK
CHRYSLER
OTHER
LEFT HEADLAMP (8W-50-6)
3
LEFT HIGH HEADLAMP (CHRYSLER) (8W-50-5)
B
LEFT HEADLAMP LEVELING MOTOR (8W-50-8)
1
Z1 20 BK
Z1 20 BK
EXCEPT BUILT-UP-EXPORT
BUILT-UP -EXPORT
SEAT BELT SWITCH (8W-40-4)
2
CLUTCH SWITCH (DIESEL) (8W-30-39)
2
Z1 20 BK
Z1 20 BK
Z1 20 BK
Z1 20 BK
BRAKE PRESSURE SWITCH (8W-46-3)
B
Z1 20 BK
EXCEPT BUILT-UP-EXPORT
BUILT-UP-EXPORT
9
1
G300

HEATED SEATS

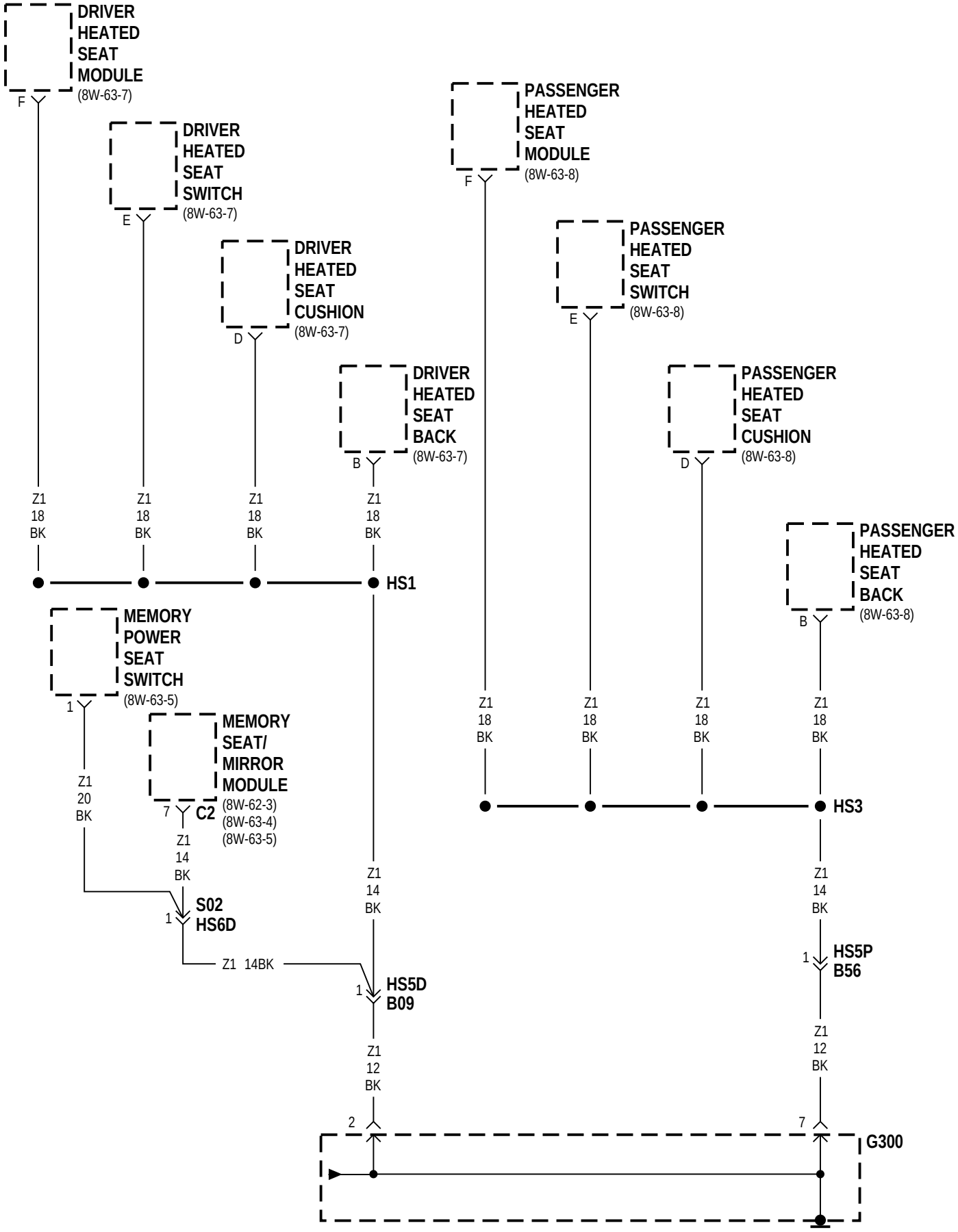

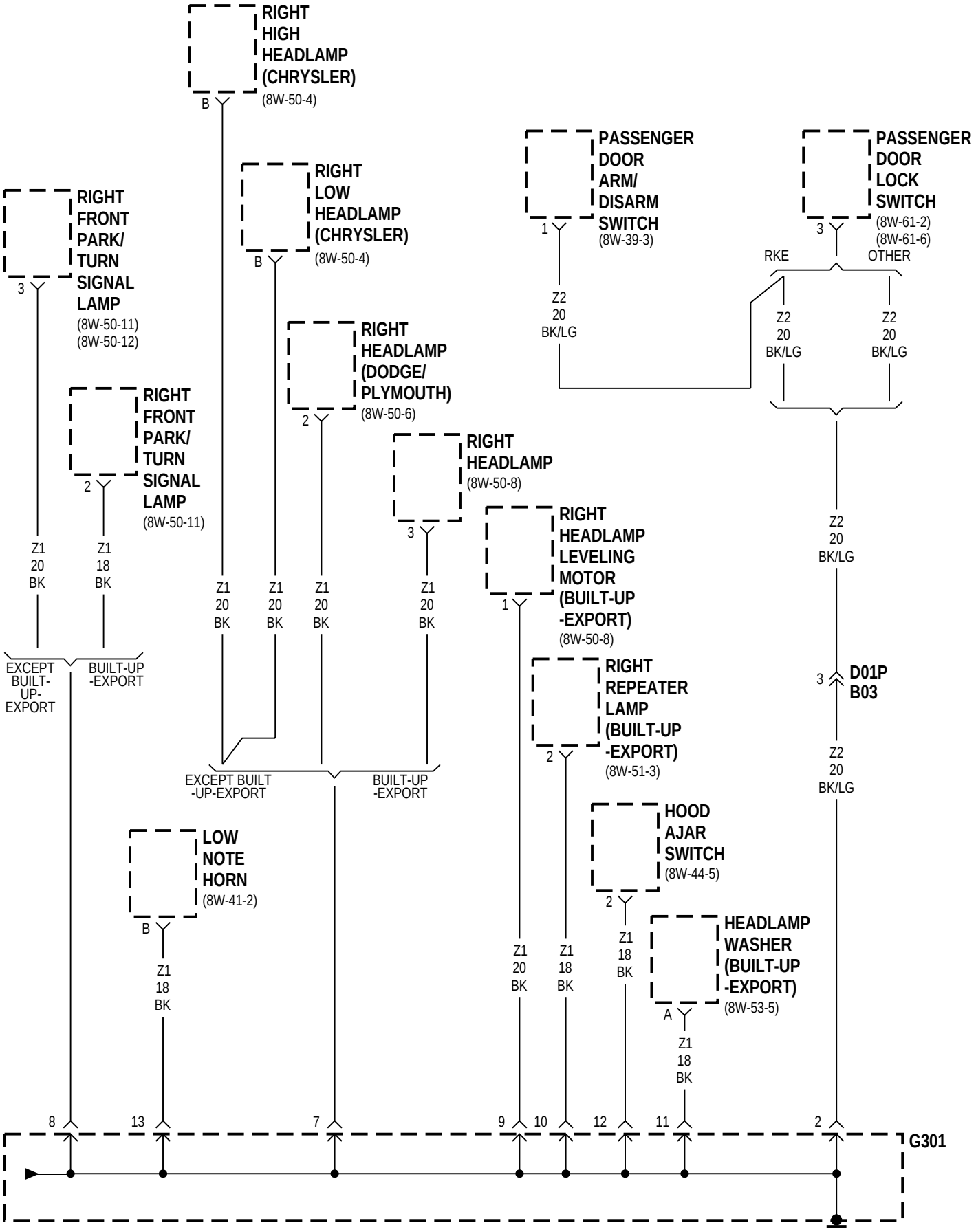
RIGHT HIGH HEADLAMP (CHRYSLER)
(8W-50-4)
B
RIGHT LOW HEADLAMP (CHRYSLER)
(8W-50-4)
B
RIGHT FRONT PARK/ TURN SIGNAL LAMP
(8W-50-11)
(8W-50-12)
3
RIGHT FRONT PARK/ TURN SIGNAL LAMP
(8W-50-11)
2
RIGHT HEADLAMP (DODGE/ PLYMOUTH)
(8W-50-6)
2
RIGHT HEADLAMP
(8W-50-8)
3
PASSENGER DOOR ARM/ DISARM SWITCH
(8W-39-3)
1
PASSENGER DOOR LOCK SWITCH
(8W-61-2)
(8W-61-6)
3
RKE
OTHER
Z2 20 BK/LG
Z2 20 BK/LG
Z2 20 BK/LG
Z2 20 BK/LG
Z1 20 BK
Z1 18 BK
Z1 20 BK
Z1 20 BK
Z1 20 BK
Z1 20 BK
EXCEPT BUILT-UP-EXPORT
BUILT-UP -EXPORT
EXCEPT BUILT -UP-EXPORT
BUILT-UP -EXPORT
RIGHT HEADLAMP LEVELING MOTOR (BUILT-UP -EXPORT)
(8W-50-8)
1
RIGHT REPEATER LAMP (BUILT-UP -EXPORT)
(8W-51-3)
2
HOOD AJAR SWITCH
(8W-44-5)
2
HEADLAMP WASHER (BUILT-UP -EXPORT)
(8W-53-5)
A
Z1 18 BK
Z1 18 BK
Z1 18 BK
Z1 20 BK
Z1 18 BK
LOW NOTE HORN
(8W-41-2)
B
Z1 18 BK
Z2 20 BK/LG
3
D01P
B03
8
13
7
9
10
12
11
2
G301

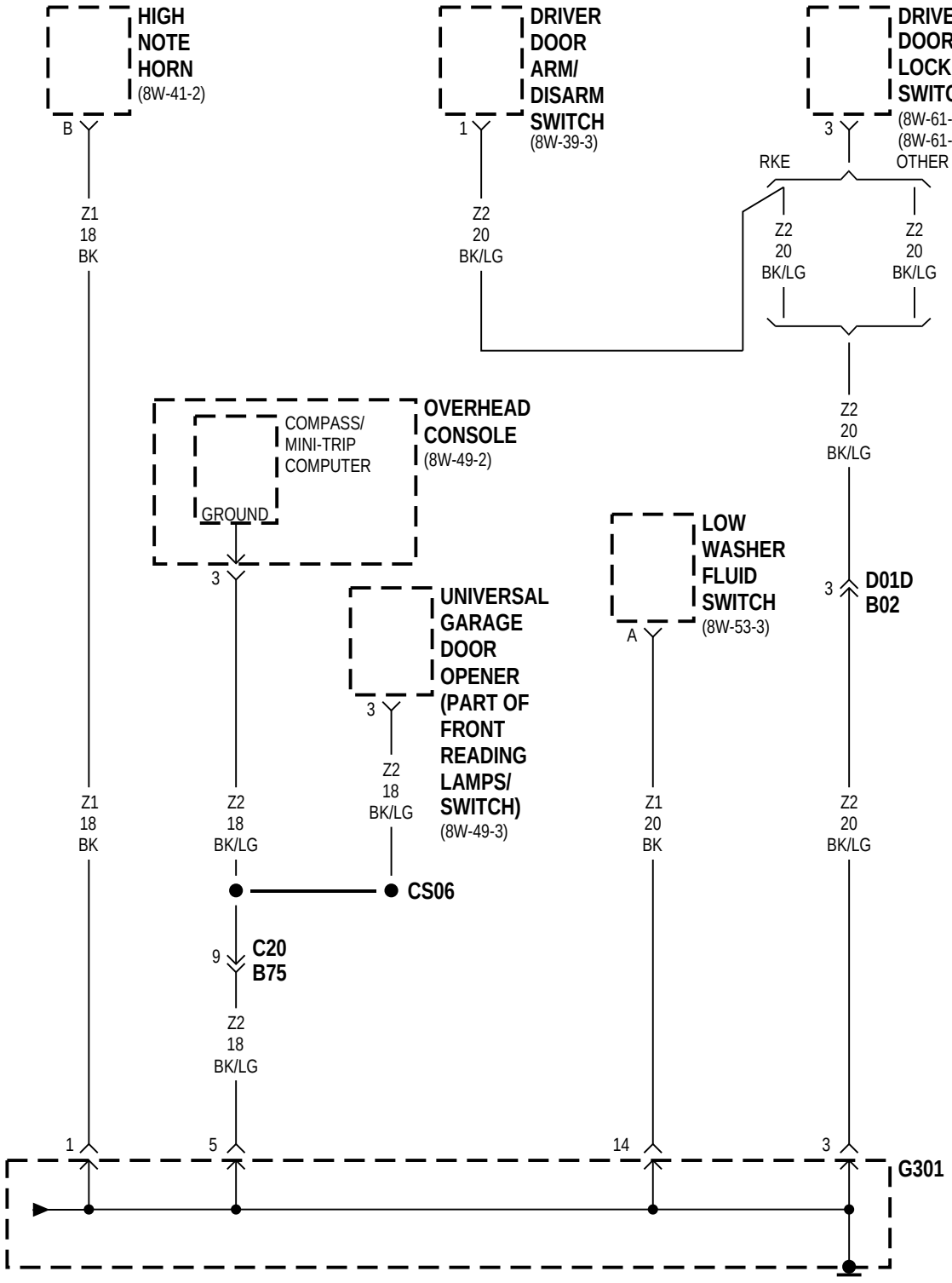
HIGH NOTE HORN
(8W-41-2)
B
Z1 18 BK
DRIVER DOOR ARM/ DISARM SWITCH
(8W-39-3)
1
Z2 20 BK/LG
DRIVER DOOR LOCK SWITCH
(8W-61-2)
(8W-61-6)
3
RKE
OTHER
Z2 20 BK/LG
Z2 20 BK/LG
Z2 20 BK/LG
OVERHEAD CONSOLE
(8W-49-2)
COMPASS/ MINI-TRIP COMPUTER
GROUND
3
LOW WASHER FLUID SWITCH
(8W-53-3)
A
3
D01D B02
UNIVERSAL GARAGE DOOR OPENER (PART OF FRONT READING LAMPS/ SWITCH)
(8W-49-3)
3
Z2 18 BK/LG
Z1 18 BK
Z2 18 BK/LG
Z1 20 BK
Z2 20 BK/LG
CS06
9
C20 B75
Z2 18 BK/LG
1
5
14
3
G301

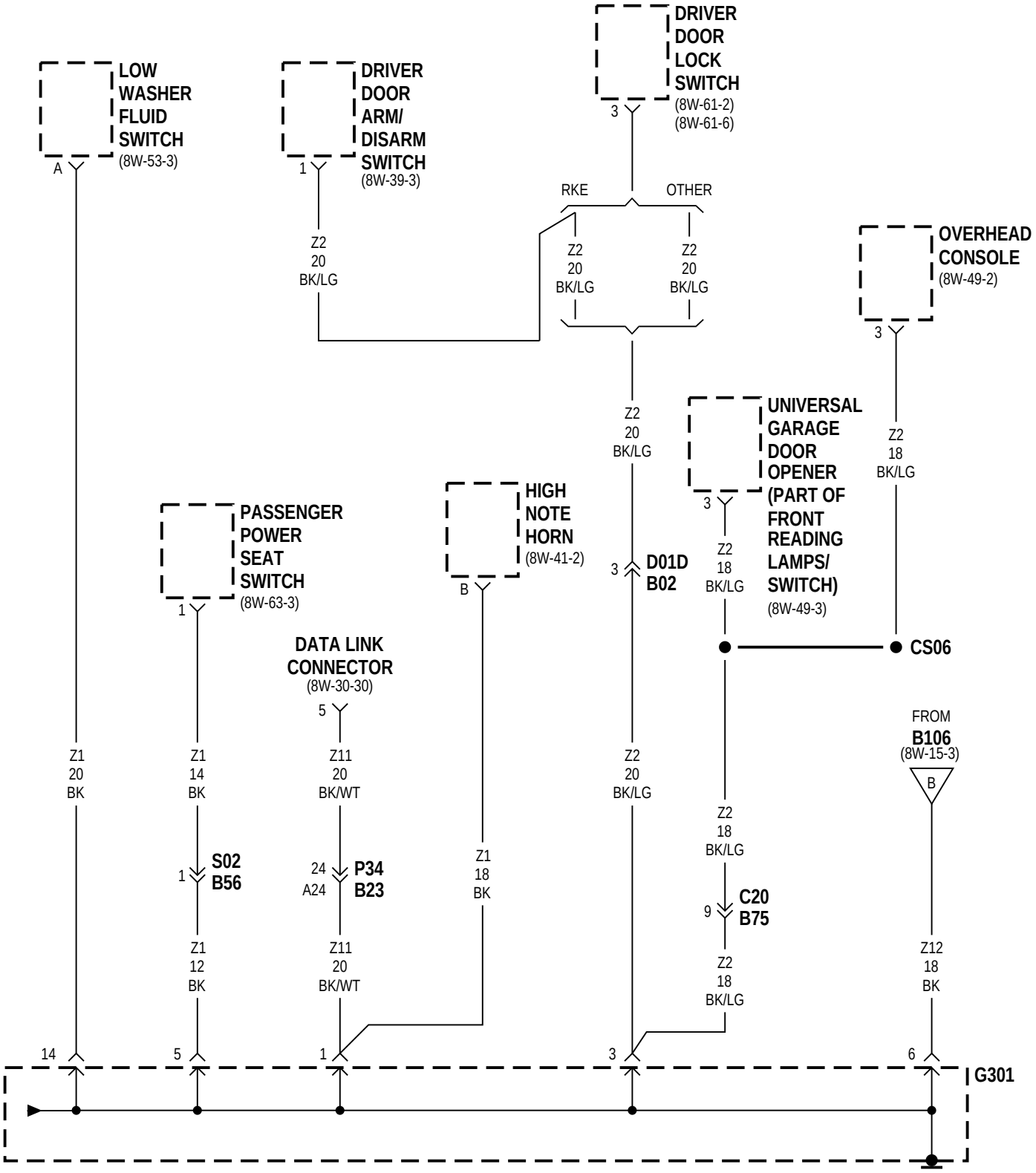
LOW WASHER FLUID SWITCH
(8W-53-3)
A
DRIVER DOOR ARM/ DISARM SWITCH
(8W-39-3)
1
DRIVER DOOR LOCK SWITCH
(8W-61-2)
(8W-61-6)
3
RKE
OTHER
Z2 20 BK/LG
Z2 20 BK/LG
Z2 20 BK/LG
OVERHEAD CONSOLE
(8W-49-2)
3
Z2 18 BK/LG
UNIVERSAL GARAGE DOOR OPENER (PART OF FRONT READING LAMPS/ SWITCH)
(8W-49-3)
3
Z2 18 BK/LG
Z2 20 BK/LG
3
D01D B02
PASSENGER POWER SEAT SWITCH
(8W-63-3)
1
HIGH NOTE HORN
(8W-41-2)
B
DATA LINK CONNECTOR
(8W-30-30)
5
CS06
FROM B106
(8W-15-3)
B
Z1 20 BK
Z1 14 BK
Z11 20 BK/WT
Z1 18 BK
Z2 20 BK/LG
Z2 18 BK/LG
Z12 18 BK
1
S02 B56
24
A24
P34 B23
9
C20 B75
Z1 12 BK
Z11 20 BK/WT
Z2 18 BK/LG
14
5
1
3
6
G301

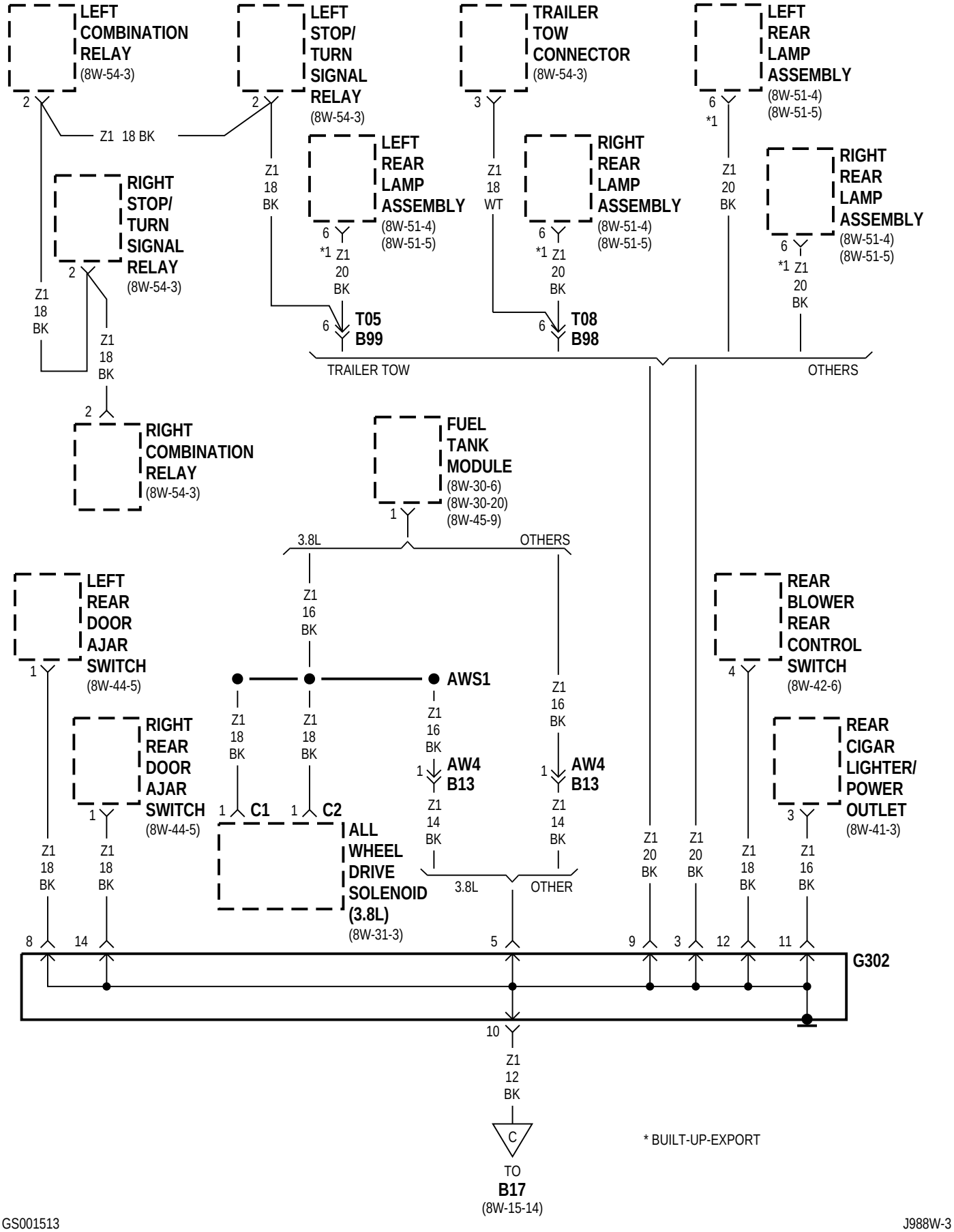
LEFT COMBINATION RELAY (8W-54-3)
LEFT STOP/ TURN SIGNAL RELAY (8W-54-3)
TRAILER TOW CONNECTOR (8W-54-3)
LEFT REAR LAMP ASSEMBLY (8W-51-4) (8W-51-5)
Z1 18 BK
RIGHT STOP/ TURN SIGNAL RELAY (8W-54-3)
LEFT REAR LAMP ASSEMBLY (8W-51-4) (8W-51-5)
RIGHT REAR LAMP ASSEMBLY (8W-51-4) (8W-51-5)
RIGHT REAR LAMP ASSEMBLY (8W-51-4) (8W-51-5)
T05 B99
T08 B98
TRAILER TOW
OTHERS
RIGHT COMBINATION RELAY (8W-54-3)
FUEL TANK MODULE (8W-30-6) (8W-30-20) (8W-45-9)
3.8L
OTHERS
LEFT REAR DOOR AJAR SWITCH (8W-44-5)
REAR BLOWER REAR CONTROL SWITCH (8W-42-6)
AWS1
RIGHT REAR DOOR AJAR SWITCH (8W-44-5)
AW4 B13
AW4 B13
REAR CIGAR LIGHTER/ POWER OUTLET (8W-41-3)
C1
C2
ALL WHEEL DRIVE SOLENOID (3.8L) (8W-31-3)
3.8L
OTHER
G302
TO B17 (8W-15-14)
* BUILT-UP-EXPORT

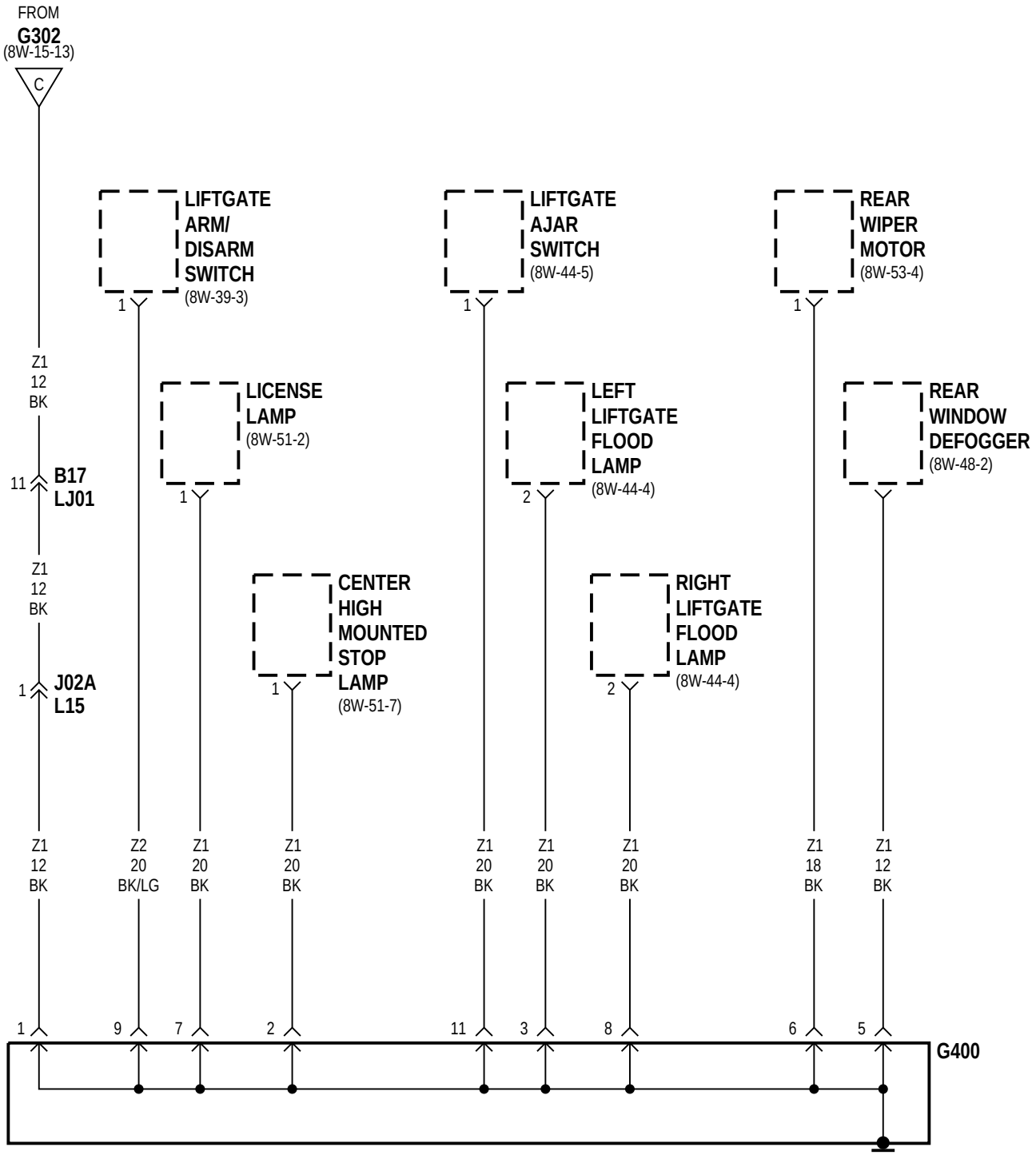
FROM
G302
(8W-15-13)
C
Z1
12
BK
11
B17
LJ01
Z1
12
BK
1
J02A
L15
Z1
12
BK
LIFTGATE
ARM/
DISARM
SWITCH
(8W-39-3)
1
Z2
20
BK/LG
9
LICENSE
LAMP
(8W-51-2)
1
Z1
20
BK
7
CENTER
HIGH
MOUNTED
STOP
LAMP
(8W-51-7)
1
Z1
20
BK
2
LIFTGATE
AJAR
SWITCH
(8W-44-5)
1
Z1
20
BK
11
LEFT
LIFTGATE
FLOOD
LAMP
(8W-44-4)
2
Z1
20
BK
3
RIGHT
LIFTGATE
FLOOD
LAMP
(8W-44-4)
2
Z1
20
BK
8
REAR
WIPER
MOTOR
(8W-53-4)
1
Z1
18
BK
6
REAR
WINDOW
DEFOGGER
(8W-48-2)
Z1
12
BK
5
G400

8W-20 CHARGING SYSTEM

Component	Page
Automatic Shut Down Relay	8W-20-2
Battery	8W-20-2, 3
BS33	8W-20-3
Diesel Power Relay	8W-20-3
Engine Starter Motor	8W-20-2, 3
ES01	8W-20-3
ES06	8W-20-3
ES09	8W-20-2
ES11	8W-20-2, 3
ES12	8W-20-2
ES26	8W-20-3
ES28	8W-20-3
Fuse 17 (PDC)	8W-20-2, 3
Fusible Link	8W-20-2, 3
G100	8W-20-2, 3
G103	8W-20-2, 3
Generator	8W-20-2, 3
Glow Plug Relay	8W-20-3
Power Distribution Center	8W-20-2, 3
Powertrain Control Module	8W-20-2, 3
Voltage Regulator	8W-20-3

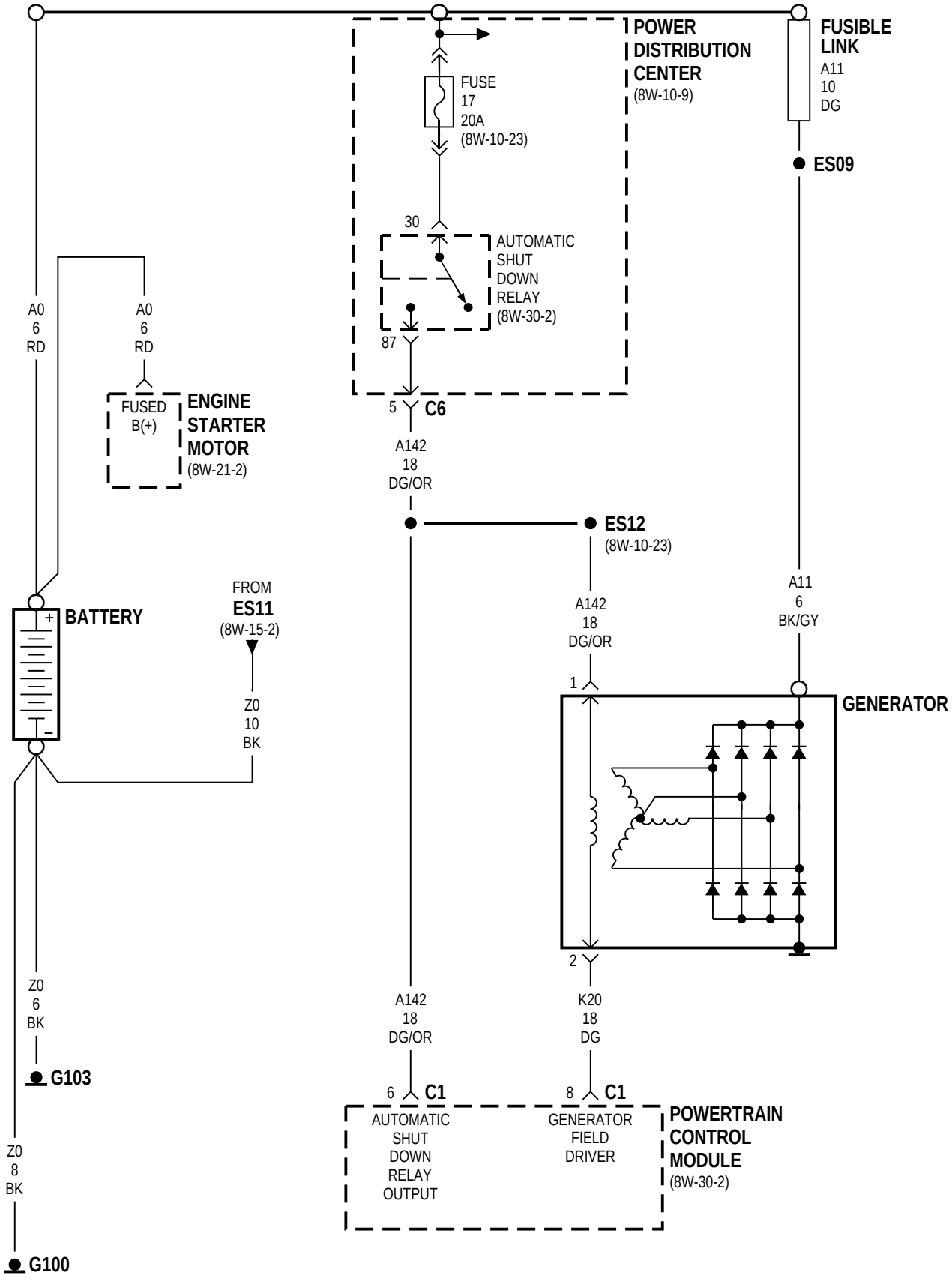
POWER DISTRIBUTION CENTER
(8W-10-9)
FUSIBLE LINK
A11
10
DG
FUSE
17
20A
(8W-10-23)
ES09
30
AUTOMATIC SHUT DOWN RELAY
(8W-30-2)
87
A0
6
RD
A0
6
RD
FUSED
B(+)
ENGINE STARTER MOTOR
(8W-21-2)
5
C6
A142
18
DG/OR
ES12
(8W-10-23)
FROM
ES11
(8W-15-2)
BATTERY
Z0
10
BK
A142
18
DG/OR
A11
6
BK/GY
1
GENERATOR
2
Z0
6
BK
G103
A142
18
DG/OR
K20
18
DG
Z0
8
BK
6
C1
8
C1
AUTOMATIC SHUT DOWN RELAY OUTPUT
GENERATOR FIELD DRIVER
POWERTRAIN CONTROL MODULE
(8W-30-2)
G100

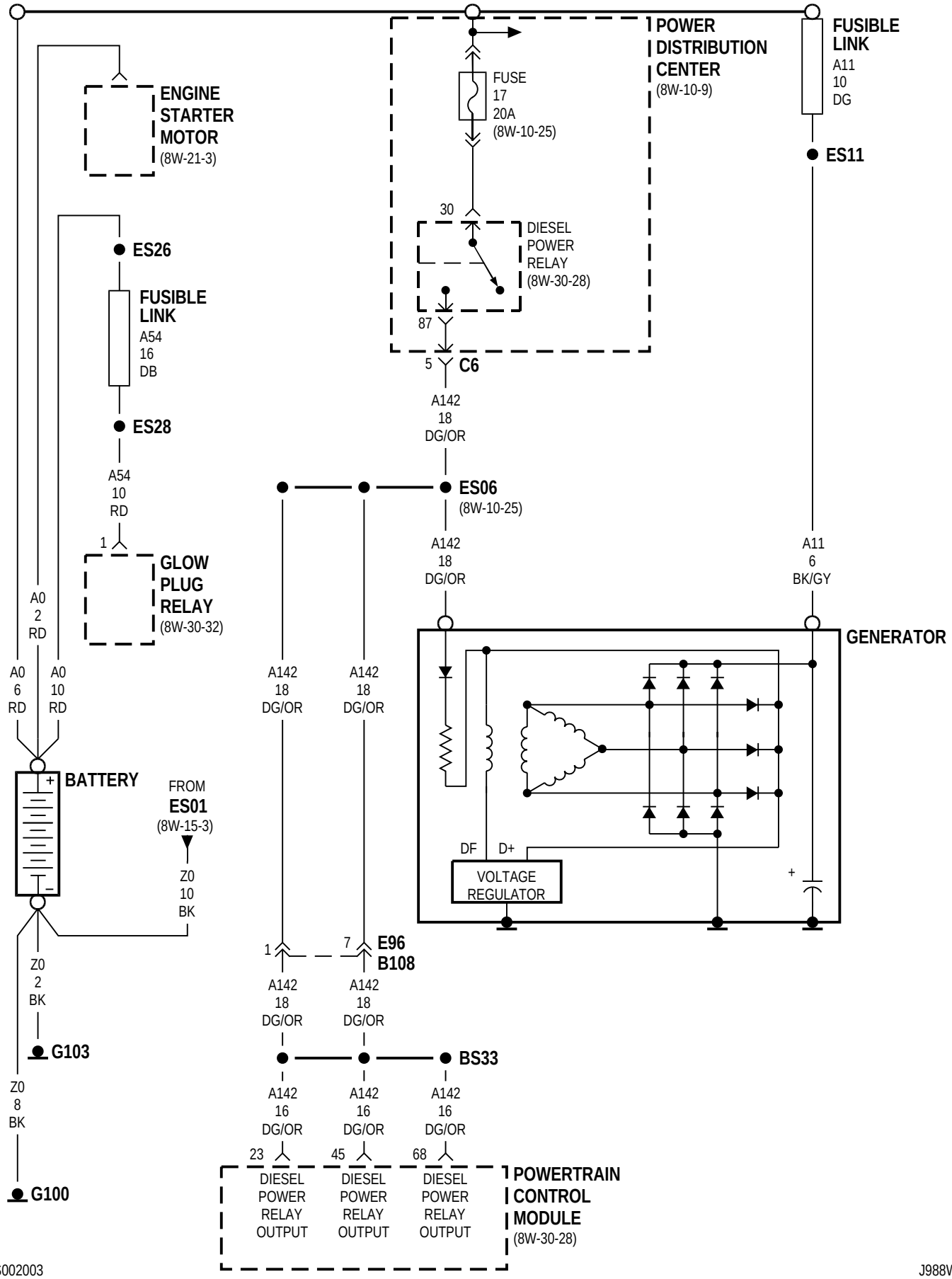
ENGINE STARTER MOTOR
(8W-21-3)
POWER DISTRIBUTION CENTER
(8W-10-9)
FUSE 17 20A
(8W-10-25)
30
DIESEL POWER RELAY
(8W-30-28)
87
5
C6
FUSIBLE LINK A11 10 DG
ES11
ES26
FUSIBLE LINK A54 16 DB
ES28
A54 10 RD
1
GLOW PLUG RELAY
(8W-30-32)
A142 18 DG/OR
ES06
(8W-10-25)
A142 18 DG/OR
A11 6 BK/GY
GENERATOR
A0 2 RD
A0 6 RD
A0 10 RD
A142 18 DG/OR
A142 18 DG/OR
DF
D+
VOLTAGE REGULATOR
+
BATTERY
FROM ES01
(8W-15-3)
Z0 10 BK
1
7
E96
B108
Z0 2 BK
G103
BS33
Z0 8 BK
A142 16 DG/OR
A142 16 DG/OR
A142 16 DG/OR
23
45
68
DIESEL POWER RELAY OUTPUT
DIESEL POWER RELAY OUTPUT
DIESEL POWER RELAY OUTPUT
POWERTRAIN CONTROL MODULE
(8W-30-28)
G100

8W-21 STARTING SYSTEM

Component	Page
Battery	8W-21-2, 3
Clutch Interlock Switch	8W-21-2, 3
Clutch Interlock Switch Jumper	8W-21-2
Engine Starter Motor	8W-21-2, 3
Engine Starter Motor Relay	8W-21-2, 3
ES01	8W-21-3
ES26	8W-21-3
ES28	8W-21-3
Fuse 10 (JB)	8W-21-2, 3
Fuse 23 (PDC)	8W-21-2, 3
Fusible Link	8W-21-3
G100	8W-21-3
G103	8W-21-3
Glow Plug Relay	8W-21-3
Junction Block	8W-21-2, 3
Power Distribution Center	8W-21-2, 3
Powertrain Control Module	8W-21-2, 3

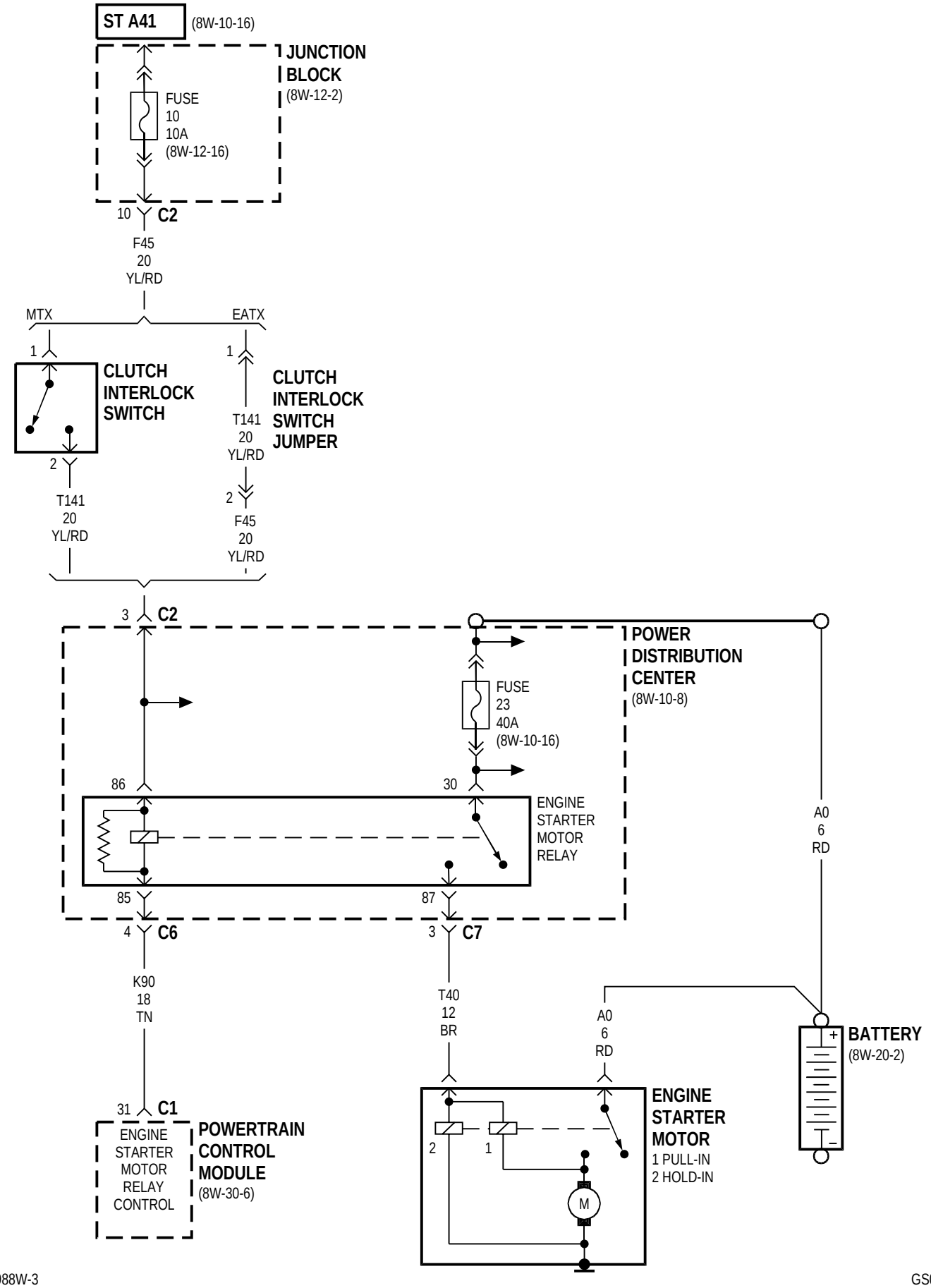
ST A41
(8W-10-16)
JUNCTION BLOCK
(8W-12-2)
FUSE 10 10A (8W-12-16)
10
C2
F45 20 YL/RD
MTX
EATX
1
CLUTCH INTERLOCK SWITCH
2
T141 20 YL/RD
1
CLUTCH INTERLOCK SWITCH JUMPER
T141 20 YL/RD
2
F45 20 YL/RD
3
C2
POWER DISTRIBUTION CENTER
(8W-10-8)
FUSE 23 40A (8W-10-16)
86
30
ENGINE STARTER MOTOR RELAY
85
87
4
C6
3
C7
A0 6 RD
K90 18 TN
T40 12 BR
A0 6 RD
BATTERY
(8W-20-2)
31
C1
ENGINE STARTER MOTOR RELAY CONTROL
POWERTRAIN CONTROL MODULE
(8W-30-6)
2
1
M
ENGINE STARTER MOTOR
1 PULL-IN
2 HOLD-IN

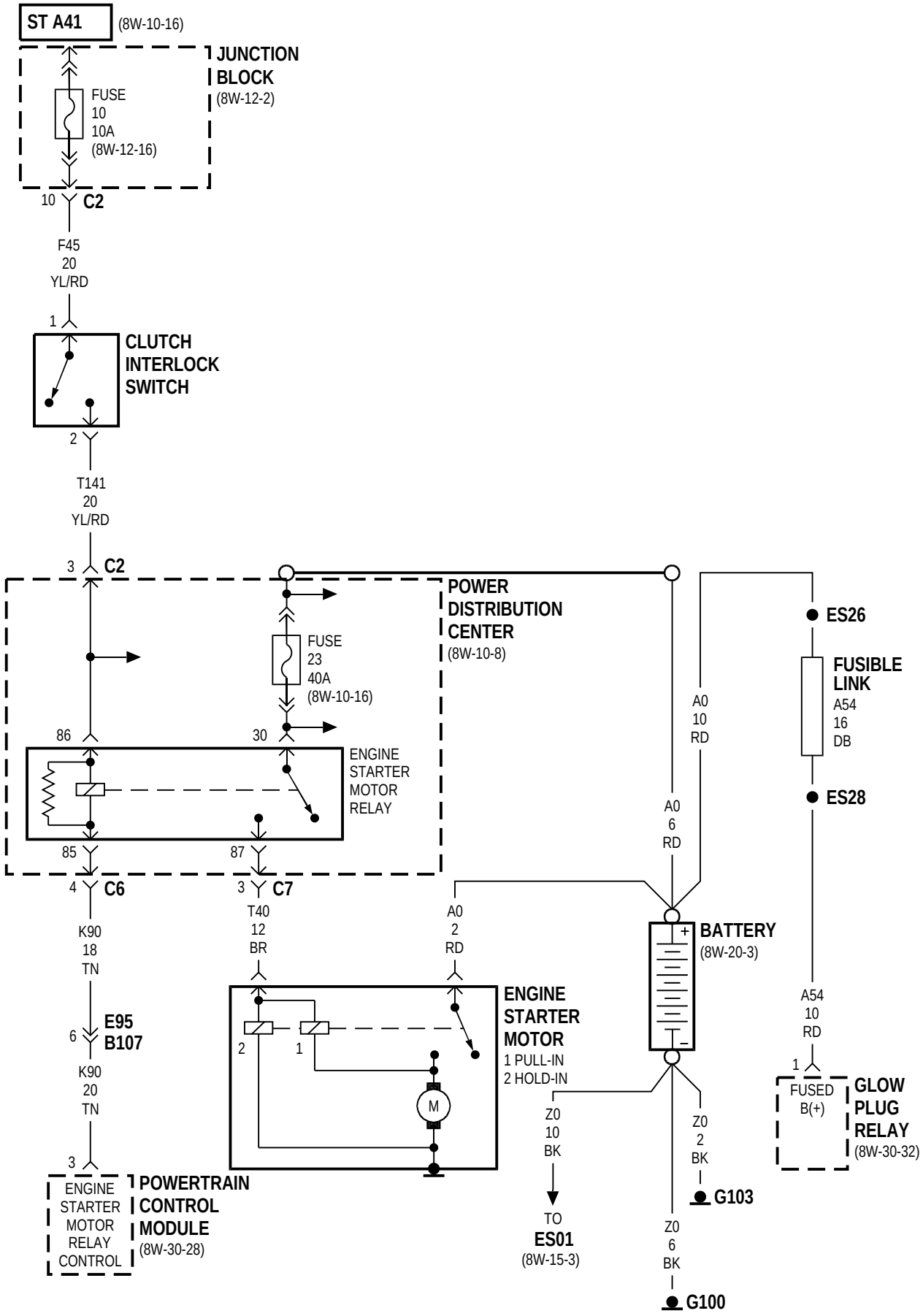
ST A41
(8W-10-16)
JUNCTION BLOCK
(8W-12-2)
FUSE
10
10A
(8W-12-16)
10
C2
F45
20
YL/RD
1
CLUTCH INTERLOCK SWITCH
2
T141
20
YL/RD
3
C2
POWER DISTRIBUTION CENTER
(8W-10-8)
FUSE
23
40A
(8W-10-16)
86
30
ENGINE STARTER MOTOR RELAY
85
87
4
C6
3
C7
K90
18
TN
6
E95
B107
K90
20
TN
3
ENGINE STARTER MOTOR RELAY CONTROL
POWERTRAIN CONTROL MODULE
(8W-30-28)
T40
12
BR
A0
2
RD
2
1
M
ENGINE STARTER MOTOR
1 PULL-IN
2 HOLD-IN
A0
10
RD
A0
6
RD
BATTERY
(8W-20-3)
Z0
10
BK
TO
ES01
(8W-15-3)
Z0
2
BK
G103
Z0
6
BK
G100
ES26
FUSIBLE LINK
A54
16
DB
ES28
A54
10
RD
1
FUSED B(+)
GLOW PLUG RELAY
(8W-30-32)

8W-30 FUEL/IGNITION SYSTEM

Component	Page
A/C Compressor Clutch Relay	8W-30-5, 37
A/C Heater Control	8W-30-5, 32, 37
A/C Pressure Transducer	8W-30-10, 16, 24, 38
Accelerator Pedal Position Sensor	8W-30-38
Airbag Control Module	8W-30-4, 31
All Wheel Drive Solenoid	8W-30-20
Automatic Shut Down Relay	8W-30-2, 7, 8, 9, 14, 15, 21, 22, 23
AW4 B13	8W-30-6
AW4 B13	8W-30-20
AWS1	8W-30-20
AWS2	8W-30-20
Back-Up Switch	8W-30-6, 20
Battery	8W-30-2, 3, 29, 32
Body Control Module	8W-30-4, 6, 20, 31, 36, 39
BS01	8W-30-39
BS02	8W-30-6, 20
BS05	8W-30-4, 31
BS06	8W-30-4, 31
BS30	8W-30-36
BS31	8W-30-28, 35
BS32	8W-30-33
BS33	8W-30-28
BS34	8W-30-33, 34, 36, 38
BS40	8W-30-35
BS41	8W-30-35
Camshaft Position Sensor	8W-30-8, 14, 22, 24
Clockspring	8W-30-5, 39
Clutch Switch	8W-30-39
Compass/Mini-Trip Computer	8W-30-31
Control Sleeve Sensor	8W-30-34
Controller Anti-Lock Brake	8W-30-4, 31
Crank Case Heater	8W-30-29
Crankshaft Position Sensor	8W-30-8, 14, 22
Data Link Connector	8W-30-3, 4, 30, 31
Diesel Power Relay	8W-30-28, 29, 32, 33
Downstream Heated Oxygen Sensor	8W-30-7, 21
EGR Solenoid	8W-30-18, 20, 29
Engine Coolant Temperature Sensor	8W-30-10, 16, 24, 36
Engine Speed Sensor	8W-30-35
Engine Starter Motor Relay	8W-30-6, 20, 28
ES01	8W-30-29
ES02	8W-30-8, 10, 11, 14, 16, 17, 22, 24, 25, 29
ES03	8W-30-10, 11, 16, 17, 24, 25
ES05	8W-30-14, 19, 22, 25, 33, 34, 36
ES06	8W-30-28, 29, 32, 33
ES07	8W-30-2, 18, 20, 26
ES08	8W-30-17, 19, 25
ES09	8W-30-37
ES11	8W-30-2, 3
ES12	8W-30-2, 7, 8, 9, 14, 15, 21, 22, 23
ES13	8W-30-4
ES14	8W-30-4
ES17	8W-30-8, 11, 14, 17, 22
ES18	8W-30-7, 21
ES21	8W-30-7, 8, 10, 11, 14, 16, 17, 24
ES24	8W-30-3
ES26	8W-30-32
ES28	8W-30-32
ES29	8W-30-32
ES30	8W-30-35
ES31	8W-30-35
ES37	8W-30-32
ES40	8W-30-29
ES99	8W-30-9
Evap Leak Detection Pump	8W-30-18, 26
Evap/Purge Solenoid	8W-30-12, 18, 26
Flexible Fuel Sensor	8W-30-22
FS01	8W-30-16, 23
FS02	8W-30-16, 22, 24
FS03	8W-30-15
Fuel Heater	8W-30-29
Fuel Heater Relay	8W-30-29
Fuel Injector No. 1	8W-30-9, 15, 23
Fuel Injector No. 2	8W-30-9, 15, 23
Fuel Injector No. 3	8W-30-9, 15, 23
Fuel Injector No. 4	8W-30-9, 15, 23
Fuel Injector No. 5	8W-30-23
Fuel Injector No. 6	8W-30-23
Fuel Pump Module	8W-30-33, 34
Fuel Pump Relay	8W-30-6, 20
Fuel Quantity Actuator	8W-30-33
Fuel Shutdown Solenoid	8W-30-33
Fuel Tank Module	8W-30-6, 20
Fuel Temperature Sensor	8W-30-33
Fuel Timing Solenoid	8W-30-33
Fuse 6 (JB)	8W-30-32
Fuse 13 (PDC)	8W-30-39
Fuse 16 (PDC)	8W-30-2, 6, 20, 29
Fuse 17 (PDC)	8W-30-2, 7, 8, 9, 14, 15, 21, 22, 23, 28, 29, 32, 33
Fuse 28 (PDC)	8W-30-3, 30
Fusible Link A0	8W-30-32
G100	8W-30-2, 3, 29
G101	8W-30-7, 21
G103	8W-30-2, 3, 29
G200	8W-30-3, 5, 30
G300	8W-30-7, 13, 19, 21, 27, 28, 35, 39
G301	8W-30-30, 35
G302	8W-30-6, 20
Generator	8W-30-2, 13, 19, 27
Glow Plug Lamp	8W-30-32
Glow Plug No. 1	8W-30-32
Glow Plug No. 2	8W-30-32
Glow Plug No. 3	8W-30-32
Glow Plug No. 4	8W-30-32
Glow Plug Relay	8W-30-32
Idle Air Control Motor	8W-30-12, 18, 26
Ignition Coil Pack	8W-30-8, 14, 22
Instrument Cluster	8W-30-4, 31
Intake Air Temperature Sensor	8W-30-17
Intake Air Temperature/Manifold Absolute Pressure Sensor	8W-30-10
Junction Block	8W-30-2, 3, 6, 13, 18, 19, 20, 26, 27, 28, 29, 30, 32, 36
Knock Sensor	8W-30-10, 16, 24
Left Front Park/Turn Signal Lamp	8W-30-39
Left Headlamp Leveling Motor	8W-30-39
Left Speed Control Switch	8W-30-5, 39
Manifold Absolute Pressure Sensor	8W-30-16, 24
Memory Seat/Mirror Module	8W-30-3, 30
Message Center	8W-30-13, 19, 27, 32
Needle Movement Sensor	8W-30-35
Overhead Console	8W-30-4, 31
Power Distribution Center	8W-30-2, 3, 5, 6, 7, 8, 9, 14, 15, 18, 20, 21, 22, 23, 26, 28, 29, 30, 32, 33, 36, 37, 39
Powertrain Control Module	8W-30-10
Powertrain Control Module	8W-30-11
Powertrain Control Module	8W-30-12
Powertrain Control Module	8W-30-13
Powertrain Control Module	8W-30-8
Powertrain Control Module	8W-30-9
Powertrain Control Module	8W-30-2, 3, 4, 5, 6, 7, 8, 9, 14, 15, 16, 17, 18, 19, 20, 21, 22, 23, 24, 25, 26, 27, 28, 29, 30, 32, 33, 34, 35, 36, 37, 38, 39
PS01	8W-30-4, 31
PS02	8W-30-4, 31
PTC 1 (JB)	8W-30-2, 6, 18, 20, 26, 28, 29, 36
Radiator Fan Relay	8W-30-5
Radiator Fan Relay No. 1	8W-30-37
Radiator Fan Relay No. 2	8W-30-37
Radiator Fan Relay No. 3	8W-30-37
Radio	8W-30-3, 4, 30
Right Speed Control Switch	8W-30-5, 39
Sentry Key Immobilizer Module	8W-30-4
Service Engine Soon Lamp	8W-30-13, 19, 27
Stop Lamp Switch	8W-30-13, 19, 27, 39
Throttle Position Sensor	8W-30-11, 17, 25
Transmission Control Module	8W-30-3, 4, 17, 19, 25, 27
Transmission Range Sensor	8W-30-6, 19, 20, 27, 34
Turbo Boost Pressure Sensor	8W-30-34
Upstream Heated Oxygen Sensor	8W-30-7, 21
Vacuum Solenoid	8W-30-27
Vehicle Speed Control Servo	8W-30-13, 19, 27
Vehicle Speed Sensor	8W-30-11, 17, 36
Vent Solenoid	8W-30-27

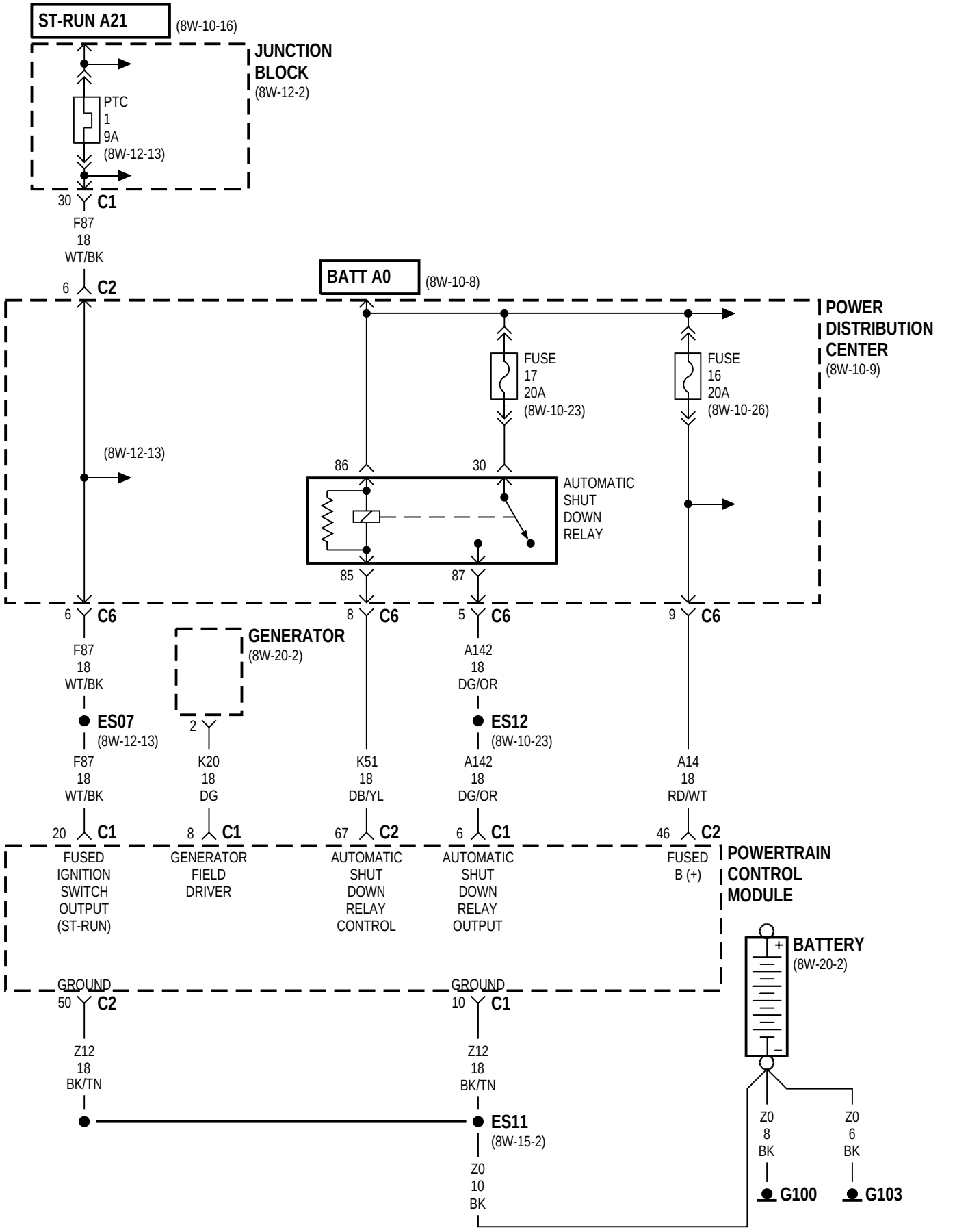
ST-RUN A21
(8W-10-16)
JUNCTION BLOCK
(8W-12-2)
PTC
1
9A
(8W-12-13)
30 C1
F87
18
WT/BK
6 C2
BATT A0
(8W-10-8)
POWER DISTRIBUTION CENTER
(8W-10-9)
FUSE
17
20A
(8W-10-23)
FUSE
16
20A
(8W-10-26)
(8W-12-13)
86
30
AUTOMATIC SHUT DOWN RELAY
85
87
6 C6
8 C6
5 C6
9 C6
GENERATOR
(8W-20-2)
F87
18
WT/BK
A142
18
DG/OR
ES07
(8W-12-13)
2
ES12
(8W-10-23)
F87
18
WT/BK
K20
18
DG
K51
18
DB/YL
A142
18
DG/OR
A14
18
RD/WT
20 C1
8 C1
67 C2
6 C1
46 C2
FUSED IGNITION SWITCH OUTPUT (ST-RUN)
GENERATOR FIELD DRIVER
AUTOMATIC SHUT DOWN RELAY CONTROL
AUTOMATIC SHUT DOWN RELAY OUTPUT
FUSED B (+)
POWERTRAIN CONTROL MODULE
BATTERY
(8W-20-2)
GROUND
50 C2
GROUND
10 C1
Z12
18
BK/TN
Z12
18
BK/TN
ES11
(8W-15-2)
Z0
10
BK
Z0
8
BK
Z0
6
BK
G100
G103

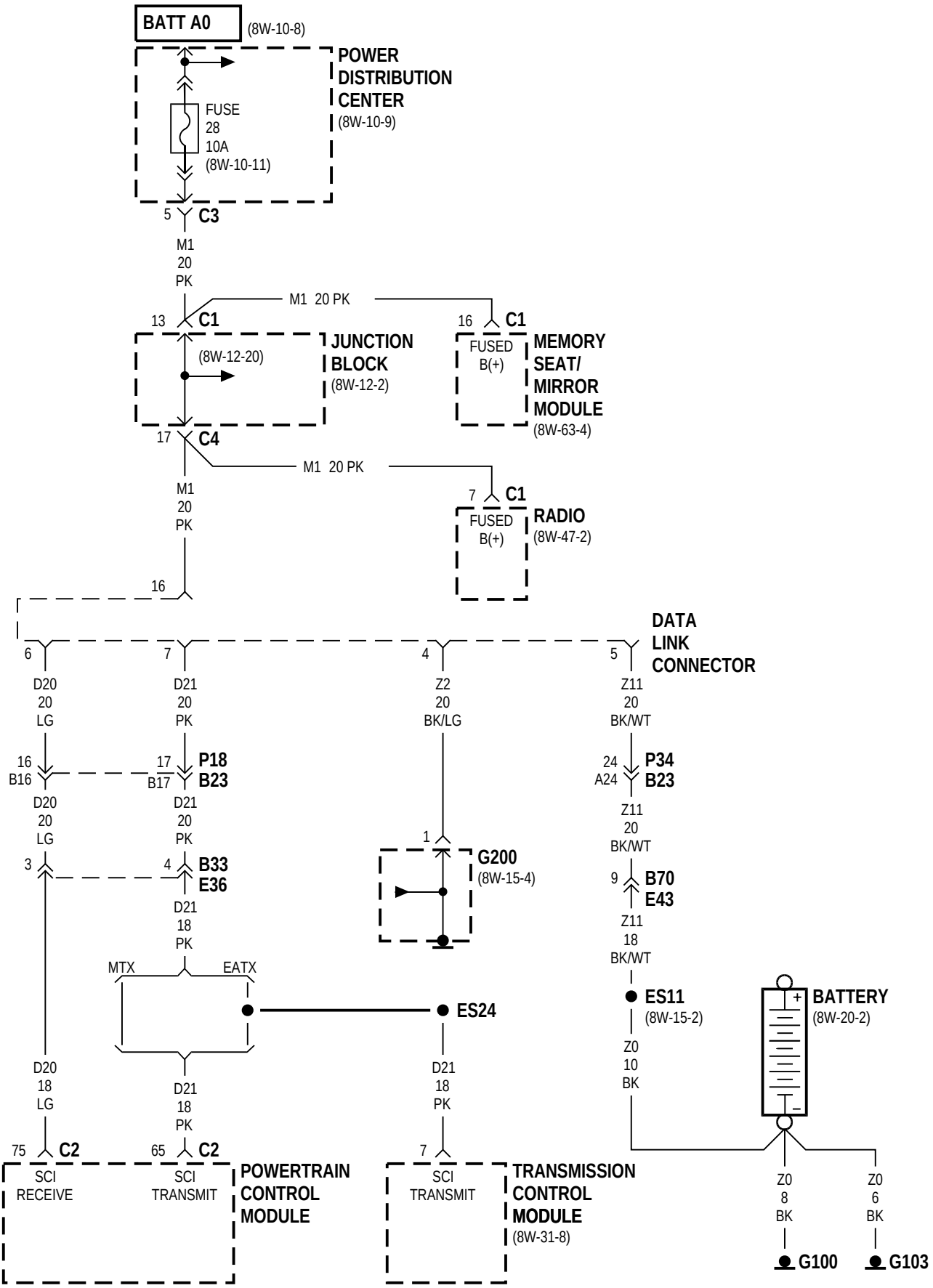
BATT A0
(8W-10-8)
POWER DISTRIBUTION CENTER
(8W-10-9)
FUSE 28 10A
(8W-10-11)
5 C3
M1 20 PK
M1 20 PK
13 C1
JUNCTION BLOCK
(8W-12-2)
(8W-12-20)
16 C1
FUSED B(+)
MEMORY SEAT/ MIRROR MODULE
(8W-63-4)
17 C4
M1 20 PK
7 C1
FUSED B(+)
RADIO
(8W-47-2)
16
DATA LINK CONNECTOR
6 D20 20 LG
7 D21 20 PK
4 Z2 20 BK/LG
5 Z11 20 BK/WT
16 B16 D20 20 LG
17 B17 P18 B23 D21 20 PK
24 A24 P34 B23 Z11 20 BK/WT
3 D20 18 LG
4 B33 E36 D21 18 PK
1 G200
(8W-15-4)
9 B70 E43 Z11 18 BK/WT
MTX
EATX
ES24
ES11
(8W-15-2)
BATTERY
(8W-20-2)
Z0 10 BK
D21 18 PK
D20 18 LG
D21 18 PK
75 C2
65 C2
7
SCI RECEIVE
SCI TRANSMIT
SCI TRANSMIT
POWERTRAIN CONTROL MODULE
TRANSMISSION CONTROL MODULE
(8W-31-8)
Z0 8 BK
Z0 6 BK
G100
G103

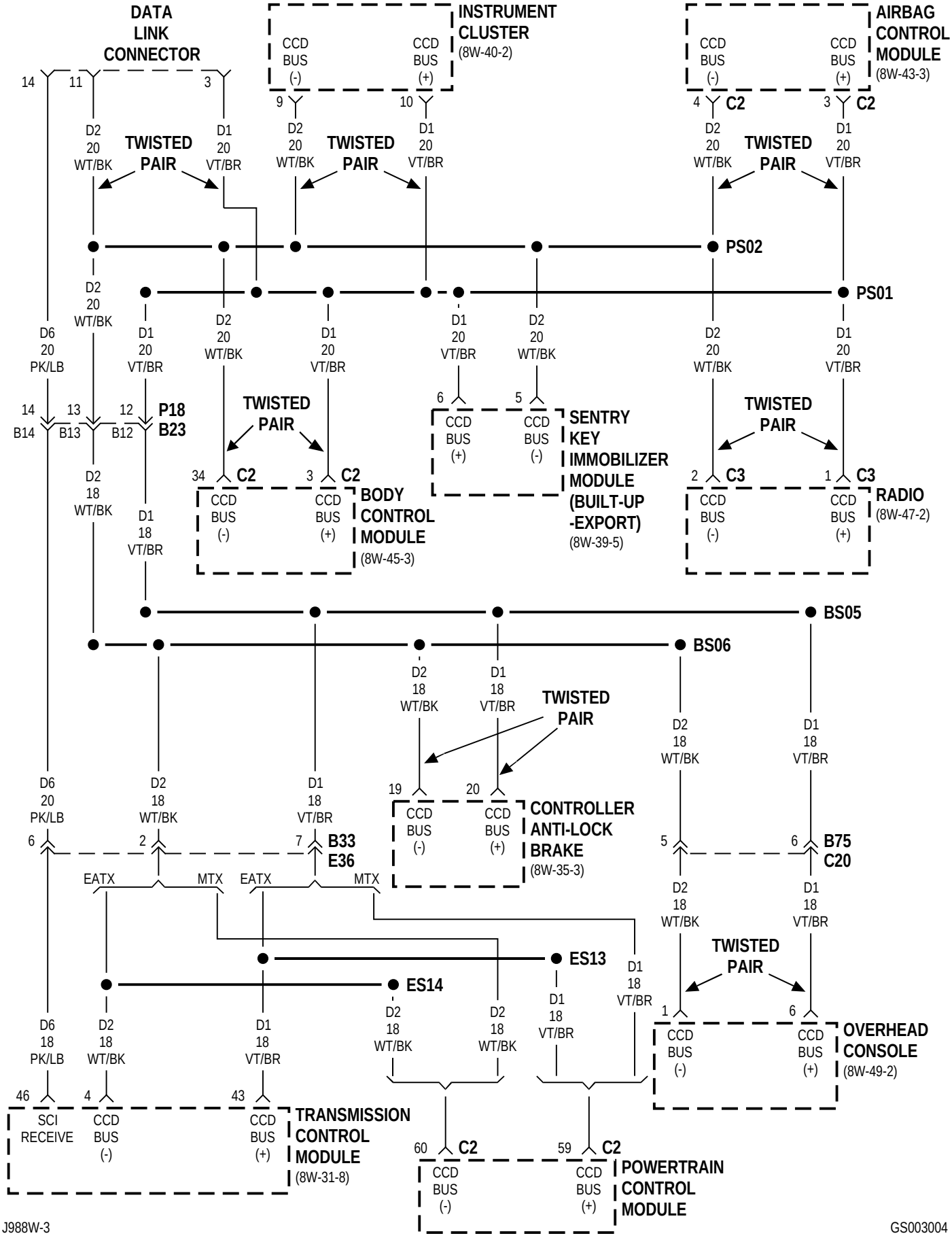
DATA LINK CONNECTOR
14
11
3
D2 20 WT/BK
TWISTED PAIR
D1 20 VT/BR
INSTRUMENT CLUSTER
(8W-40-2)
CCD BUS (-)
CCD BUS (+)
9
10
AIRBAG CONTROL MODULE
(8W-43-3)
4 C2
3 C2
PS02
PS01
D6 20 PK/LB
D1 18 VT/BR
D2 18 WT/BK
14 B14
13 B13
12 B12
P18 B23
34 C2
3 C2
BODY CONTROL MODULE
(8W-45-3)
6
5
SENTRY KEY IMMOBILIZER MODULE (BUILT-UP -EXPORT)
(8W-39-5)
2 C3
1 C3
RADIO
(8W-47-2)
BS05
BS06
19
20
CONTROLLER ANTI-LOCK BRAKE
(8W-35-3)
6
2
7
B33 E36
5
6
B75 C20
EATX
MTX
ES13
ES14
1
OVERHEAD CONSOLE
(8W-49-2)
46
4
43
SCI RECEIVE
TRANSMISSION CONTROL MODULE
(8W-31-8)
60 C2
59 C2
POWERTRAIN CONTROL MODULE

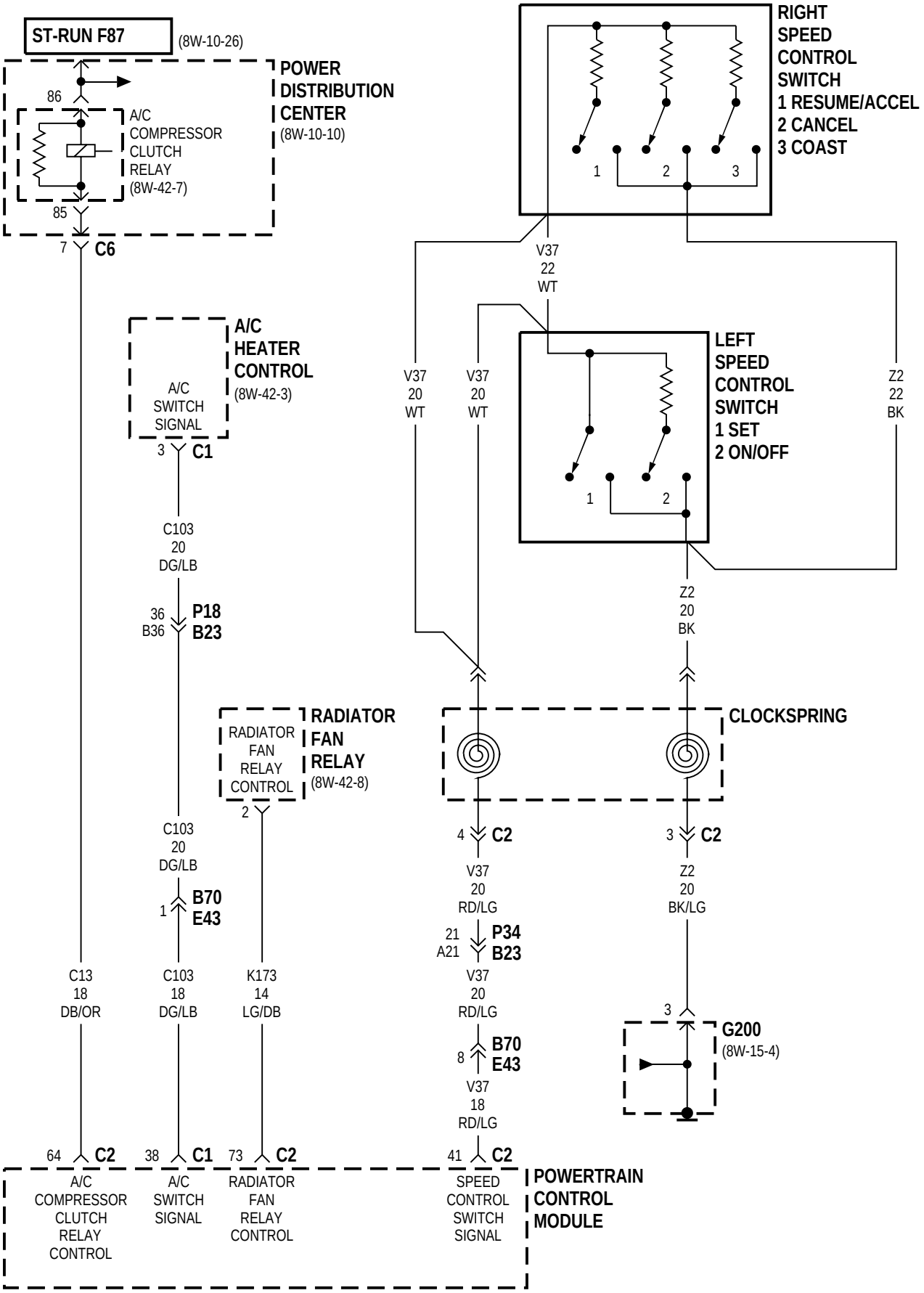
ST-RUN F87
(8W-10-26)
POWER DISTRIBUTION CENTER
(8W-10-10)
86
A/C COMPRESSOR CLUTCH RELAY
(8W-42-7)
85
7
C6
RIGHT SPEED CONTROL SWITCH
1 RESUME/ACCEL
2 CANCEL
3 COAST
1
2
3
V37
22
WT
LEFT SPEED CONTROL SWITCH
1 SET
2 ON/OFF
1
2
V37
20
WT
V37
20
WT
Z2
22
BK
A/C HEATER CONTROL
(8W-42-3)
A/C SWITCH SIGNAL
3
C1
C103
20
DG/LB
36
B36
P18
B23
Z2
20
BK
CLOCKSPRING
RADIATOR FAN RELAY
(8W-42-8)
RADIATOR FAN RELAY CONTROL
2
C103
20
DG/LB
1
B70
E43
4
C2
3
C2
V37
20
RD/LG
Z2
20
BK/LG
21
A21
P34
B23
V37
20
RD/LG
8
B70
E43
V37
18
RD/LG
3
G200
(8W-15-4)
C13
18
DB/OR
C103
18
DG/LB
K173
14
LG/DB
64
C2
38
C1
73
C2
41
C2
A/C COMPRESSOR CLUTCH RELAY CONTROL
A/C SWITCH SIGNAL
RADIATOR FAN RELAY CONTROL
SPEED CONTROL SWITCH SIGNAL
POWERTRAIN CONTROL MODULE

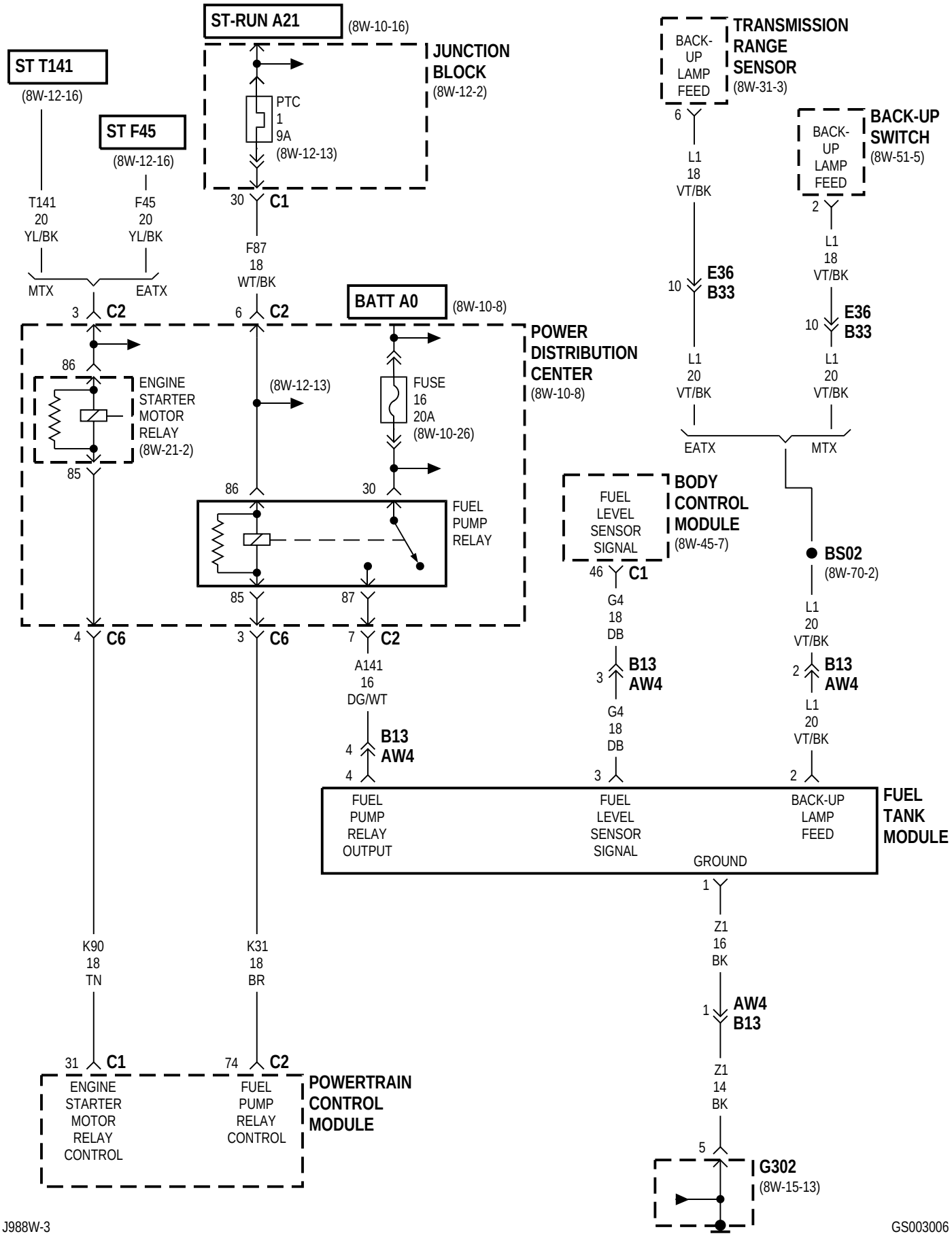
ST-RUN A21
(8W-10-16)
JUNCTION BLOCK
(8W-12-2)
PTC
1
9A
(8W-12-13)
30 C1
ST T141
(8W-12-16)
ST F45
(8W-12-16)
T141
20
YL/BK
F45
20
YL/BK
MTX
EATX
F87
18
WT/BK
3 C2
6 C2
BATT A0
(8W-10-8)
POWER DISTRIBUTION CENTER
(8W-10-8)
86
ENGINE STARTER MOTOR RELAY
(8W-21-2)
85
(8W-12-13)
FUSE
16
20A
(8W-10-26)
86
30
FUEL PUMP RELAY
85
87
4 C6
3 C6
7 C2
A141
16
DG/WT
B13
AW4
4
4
K90
18
TN
K31
18
BR
31 C1
74 C2
ENGINE STARTER MOTOR RELAY CONTROL
FUEL PUMP RELAY CONTROL
POWERTRAIN CONTROL MODULE
BACK-UP LAMP FEED
TRANSMISSION RANGE SENSOR
(8W-31-3)
6
L1
18
VT/BK
10 E36
B33
L1
20
VT/BK
BACK-UP LAMP FEED
BACK-UP SWITCH
(8W-51-5)
2
L1
18
VT/BK
10 E36
B33
L1
20
VT/BK
EATX
MTX
FUEL LEVEL SENSOR SIGNAL
BODY CONTROL MODULE
(8W-45-7)
46 C1
G4
18
DB
3 B13
AW4
G4
18
DB
3
BS02
(8W-70-2)
L1
20
VT/BK
2 B13
AW4
L1
20
VT/BK
2
FUEL PUMP RELAY OUTPUT
FUEL LEVEL SENSOR SIGNAL
BACK-UP LAMP FEED
GROUND
FUEL TANK MODULE
1
Z1
16
BK
1 AW4
B13
Z1
14
BK
5
G302
(8W-15-13)

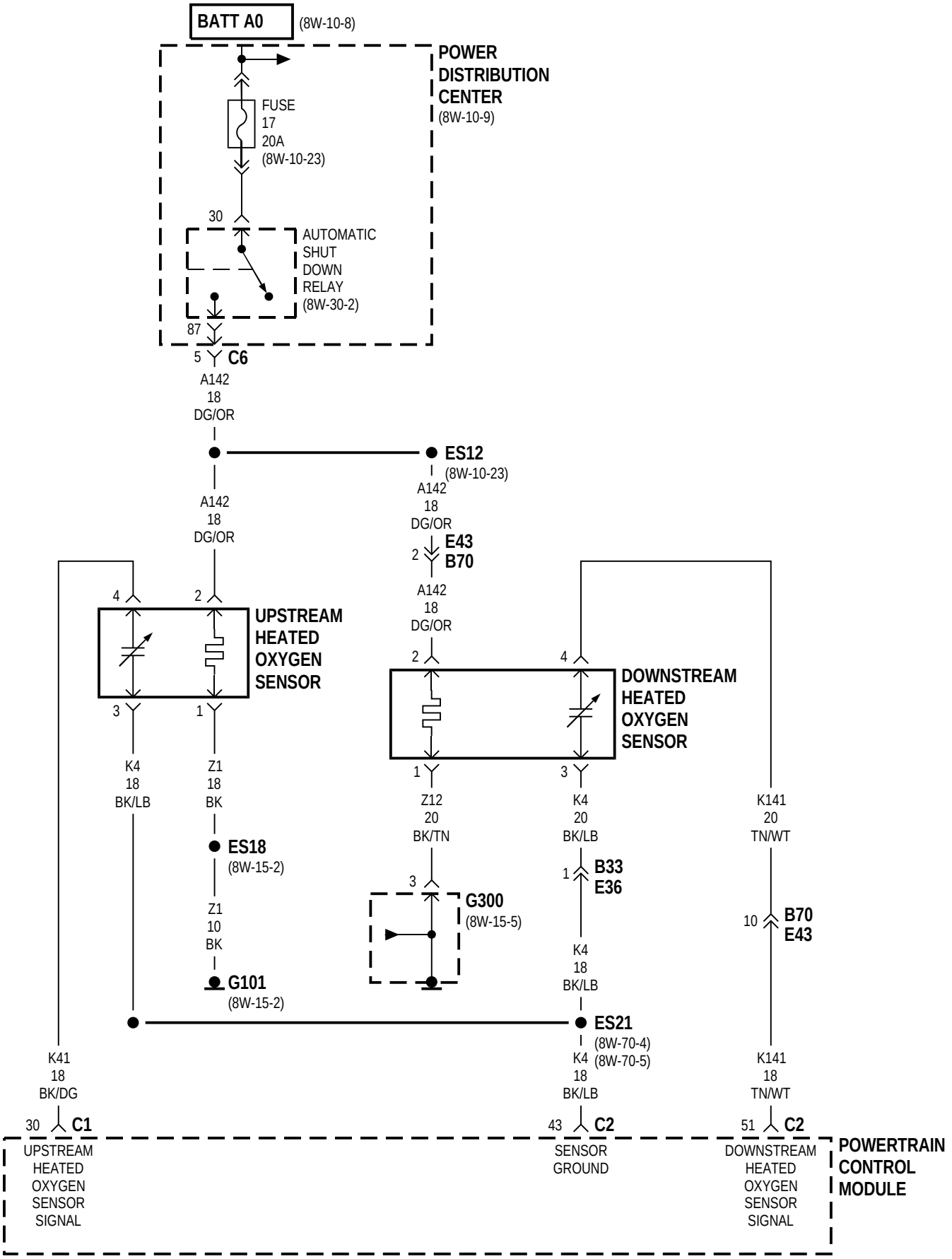
BATT A0
(8W-10-8)
POWER DISTRIBUTION CENTER
(8W-10-9)
FUSE 17 20A
(8W-10-23)
30
AUTOMATIC SHUT DOWN RELAY
(8W-30-2)
87
5
C6
A142 18 DG/OR
ES12
(8W-10-23)
A142 18 DG/OR
E43
B70
A142 18 DG/OR
4
2
UPSTREAM HEATED OXYGEN SENSOR
3
1
K4 18 BK/LB
Z1 18 BK
ES18
(8W-15-2)
Z1 10 BK
G101
(8W-15-2)
2
4
DOWNSTREAM HEATED OXYGEN SENSOR
1
3
Z12 20 BK/TN
3
G300
(8W-15-5)
K4 20 BK/LB
1
B33
E36
K4 18 BK/LB
ES21
(8W-70-4)
(8W-70-5)
K141 20 TN/WT
10
B70
E43
K41 18 BK/DG
30
C1
UPSTREAM HEATED OXYGEN SENSOR SIGNAL
K4 18 BK/LB
43
C2
SENSOR GROUND
K141 18 TN/WT
51
C2
DOWNSTREAM HEATED OXYGEN SENSOR SIGNAL
POWERTRAIN CONTROL MODULE

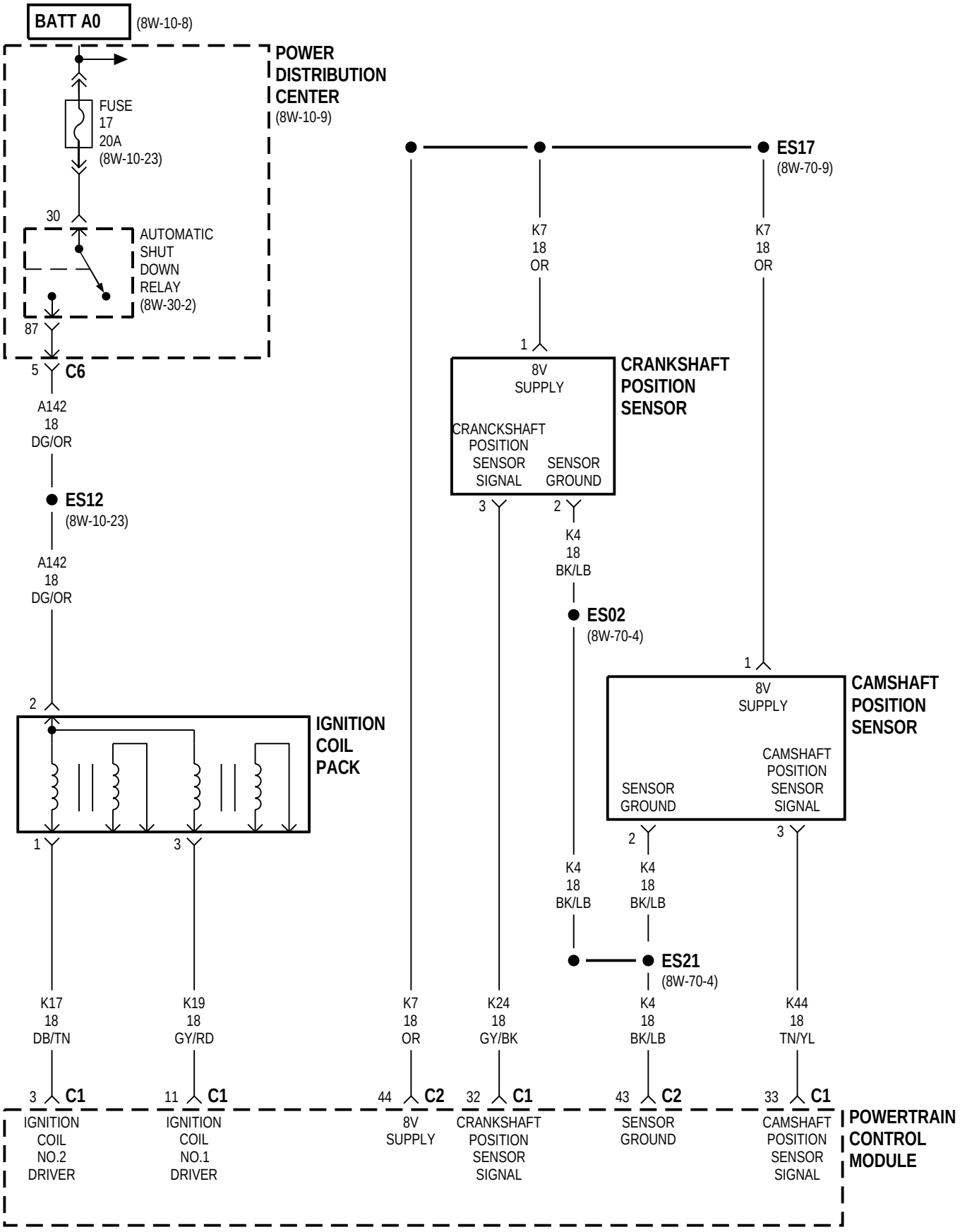
BATT A0
(8W-10-8)
POWER DISTRIBUTION CENTER
(8W-10-9)
FUSE 17 20A
(8W-10-23)
30
AUTOMATIC SHUT DOWN RELAY
(8W-30-2)
87
5
C6
A142 18 DG/OR
ES12
(8W-10-23)
A142 18 DG/OR
2
IGNITION COIL PACK
1
3
K17 18 DB/TN
K19 18 GY/RD
3
C1
11
C1
IGNITION COIL NO.2 DRIVER
IGNITION COIL NO.1 DRIVER
ES17
(8W-70-9)
K7 18 OR
K7 18 OR
1
8V SUPPLY
CRANCKSHAFT POSITION SENSOR SIGNAL
SENSOR GROUND
CRANKSHAFT POSITION SENSOR
3
2
K4 18 BK/LB
ES02
(8W-70-4)
1
8V SUPPLY
CAMSHAFT POSITION SENSOR SIGNAL
SENSOR GROUND
CAMSHAFT POSITION SENSOR
2
3
K4 18 BK/LB
K4 18 BK/LB
ES21
(8W-70-4)
K7 18 OR
K24 18 GY/BK
K4 18 BK/LB
K44 18 TN/YL
44
C2
32
C1
43
C2
33
C1
8V SUPPLY
CRANKSHAFT POSITION SENSOR SIGNAL
SENSOR GROUND
CAMSHAFT POSITION SENSOR SIGNAL
POWERTRAIN CONTROL MODULE

2.0L

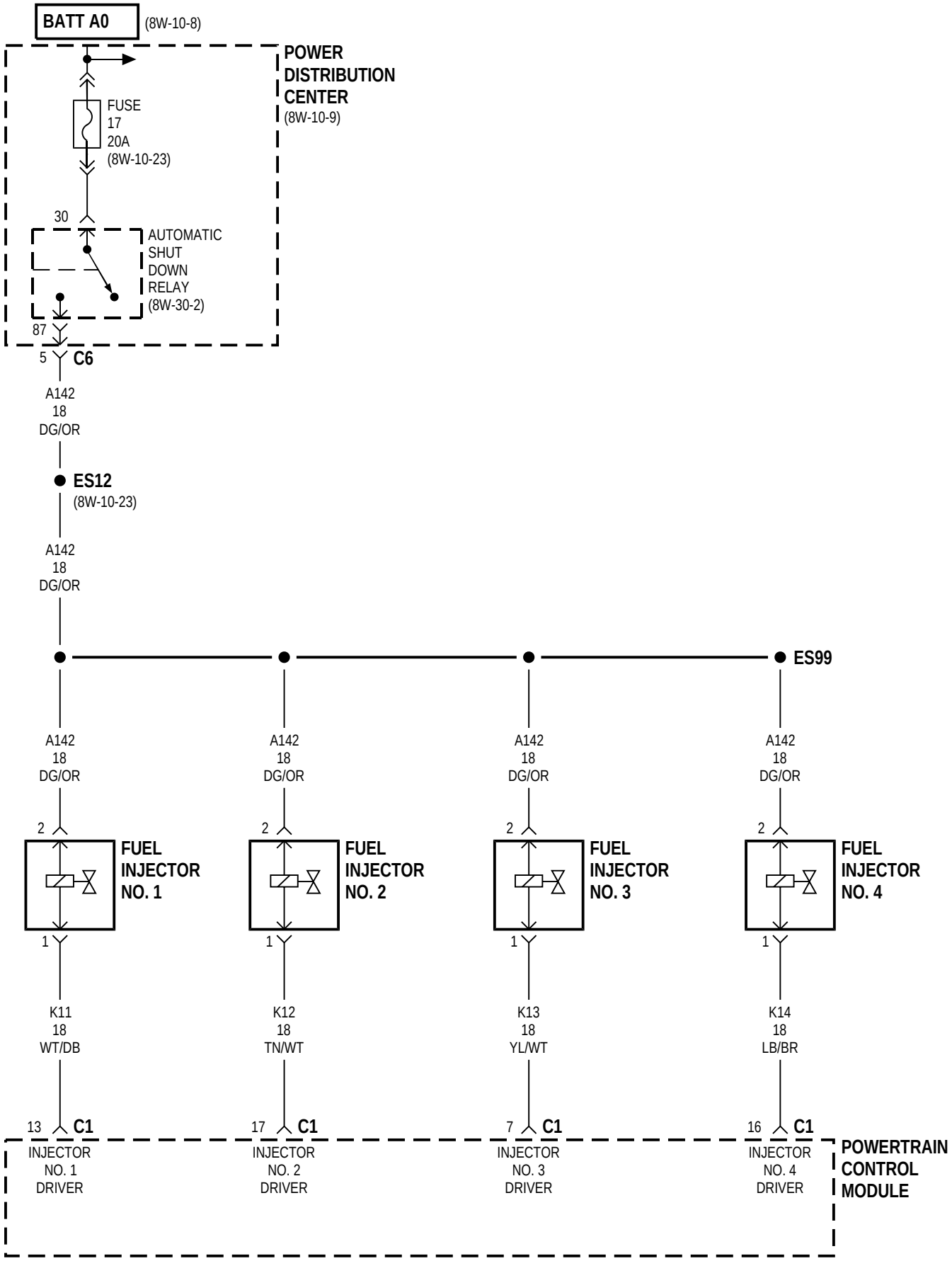
BATT A0
(8W-10-8)
POWER DISTRIBUTION CENTER
(8W-10-9)
FUSE 17 20A
(8W-10-23)
30
AUTOMATIC SHUT DOWN RELAY
(8W-30-2)
87
5
C6
A142 18 DG/OR
ES12
(8W-10-23)
A142 18 DG/OR
ES99
A142 18 DG/OR
A142 18 DG/OR
A142 18 DG/OR
A142 18 DG/OR
2
FUEL INJECTOR NO. 1
FUEL INJECTOR NO. 2
FUEL INJECTOR NO. 3
FUEL INJECTOR NO. 4
1
K11 18 WT/DB
K12 18 TN/WT
K13 18 YL/WT
K14 18 LB/BR
13 C1
17 C1
7 C1
16 C1
INJECTOR NO. 1 DRIVER
INJECTOR NO. 2 DRIVER
INJECTOR NO. 3 DRIVER
INJECTOR NO. 4 DRIVER
POWERTRAIN CONTROL MODULE

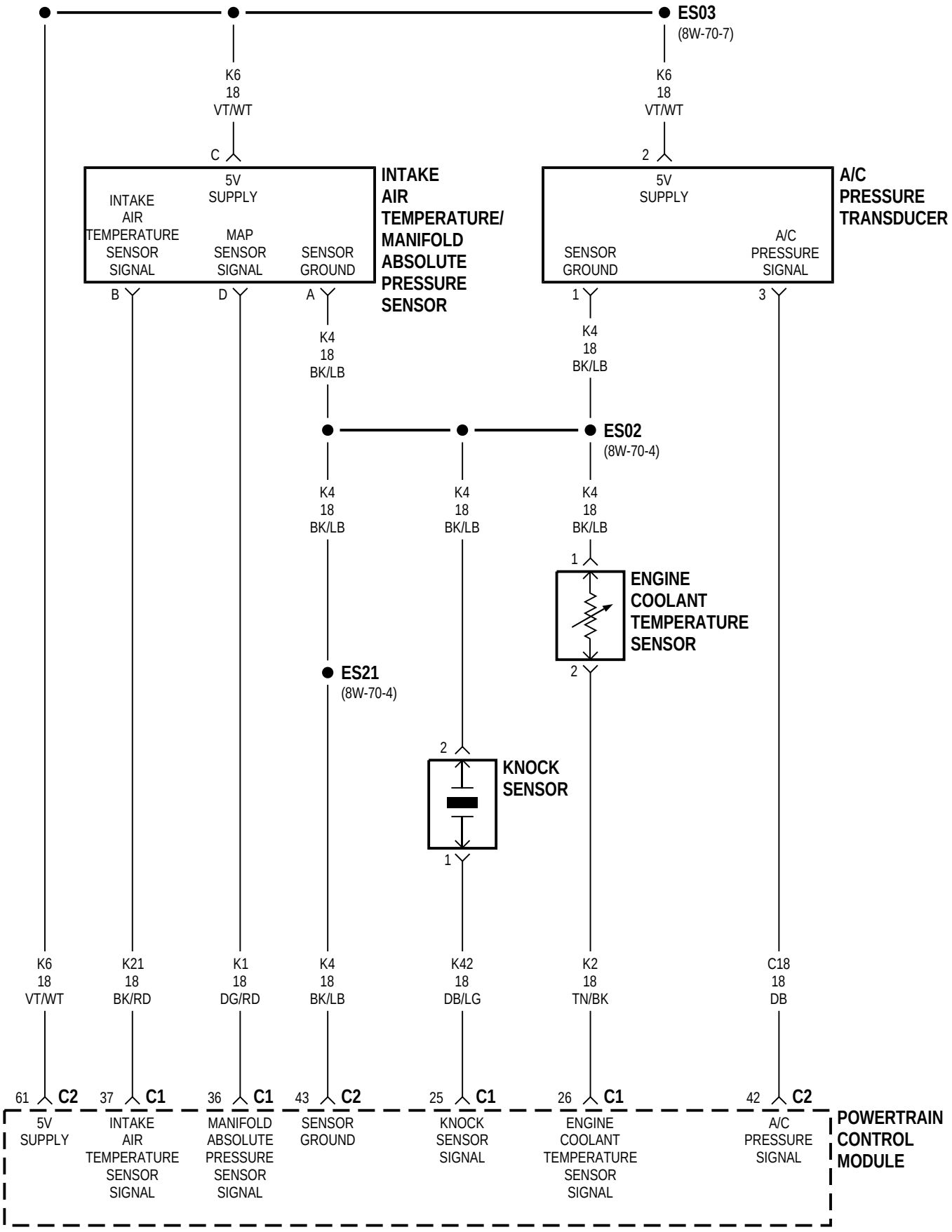
ES03
(8W-70-7)
K6
18
VT/WT
K6
18
VT/WT
C
2
5V
SUPPLY
INTAKE
AIR
TEMPERATURE
SENSOR
SIGNAL
MAP
SENSOR
SIGNAL
SENSOR
GROUND
INTAKE
AIR
TEMPERATURE/
MANIFOLD
ABSOLUTE
PRESSURE
SENSOR
5V
SUPPLY
SENSOR
GROUND
A/C
PRESSURE
SIGNAL
A/C
PRESSURE
TRANSDUCER
B
D
A
1
3
K4
18
BK/LB
K4
18
BK/LB
ES02
(8W-70-4)
K4
18
BK/LB
K4
18
BK/LB
K4
18
BK/LB
1
ENGINE
COOLANT
TEMPERATURE
SENSOR
2
ES21
(8W-70-4)
2
KNOCK
SENSOR
1
K6
18
VT/WT
K21
18
BK/RD
K1
18
DG/RD
K4
18
BK/LB
K42
18
DB/LG
K2
18
TN/BK
C18
18
DB
61 C2
37 C1
36 C1
43 C2
25 C1
26 C1
42 C2
5V
SUPPLY
INTAKE
AIR
TEMPERATURE
SENSOR
SIGNAL
MANIFOLD
ABSOLUTE
PRESSURE
SENSOR
SIGNAL
SENSOR
GROUND
KNOCK
SENSOR
SIGNAL
ENGINE
COOLANT
TEMPERATURE
SENSOR
SIGNAL
A/C
PRESSURE
SIGNAL
POWERTRAIN
CONTROL
MODULE

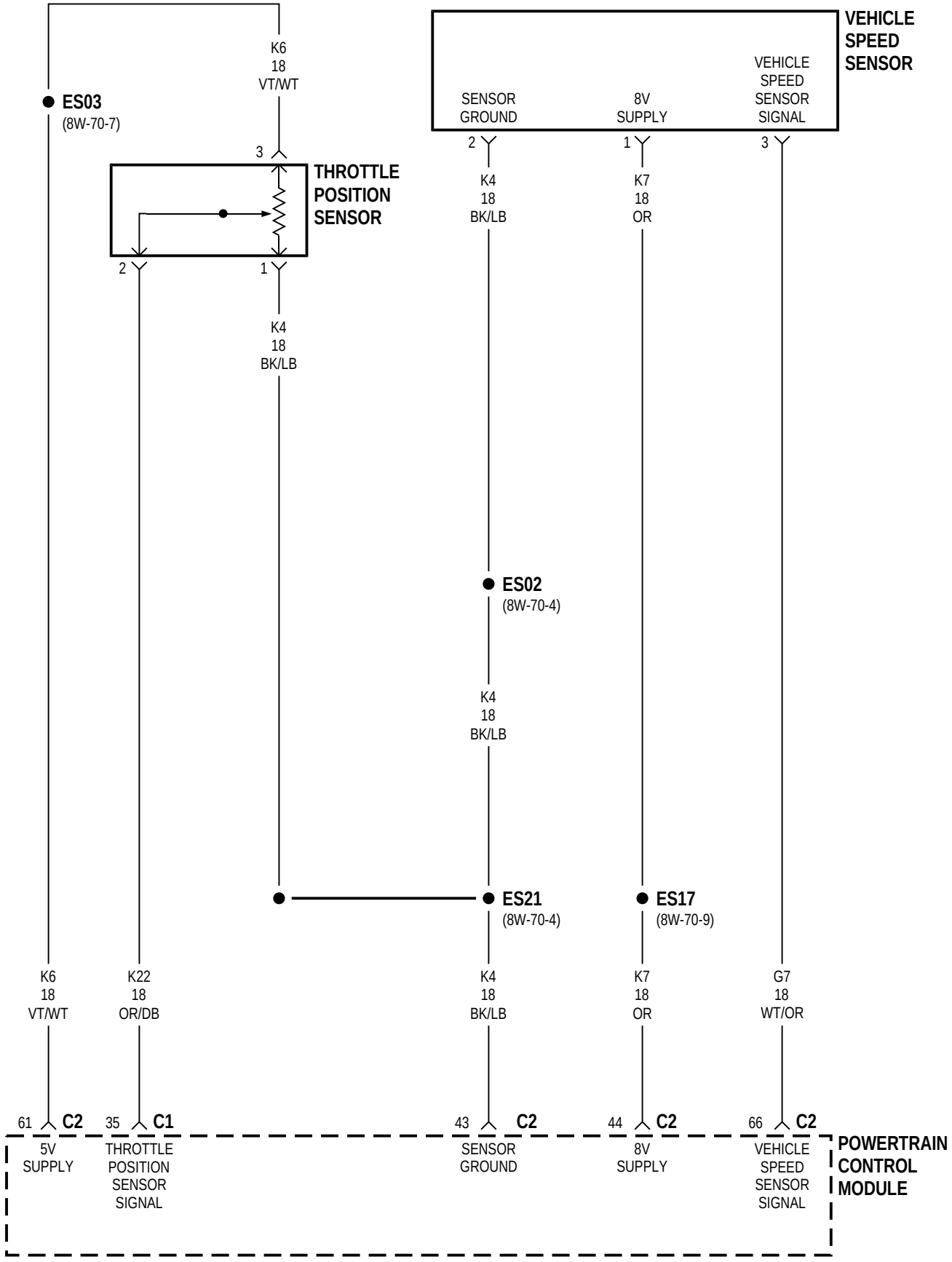
VEHICLE SPEED SENSOR
SENSOR GROUND
8V SUPPLY
VEHICLE SPEED SENSOR SIGNAL
2
1
3
K4 18 BK/LB
K7 18 OR
K6 18 VT/WT
ES03 (8W-70-7)
THROTTLE POSITION SENSOR
ES02 (8W-70-4)
ES21 (8W-70-4)
ES17 (8W-70-9)
K22 18 OR/DB
G7 18 WT/OR
61 C2
35 C1
43 C2
44 C2
66 C2
5V SUPPLY
THROTTLE POSITION SENSOR SIGNAL
POWERTRAIN CONTROL MODULE

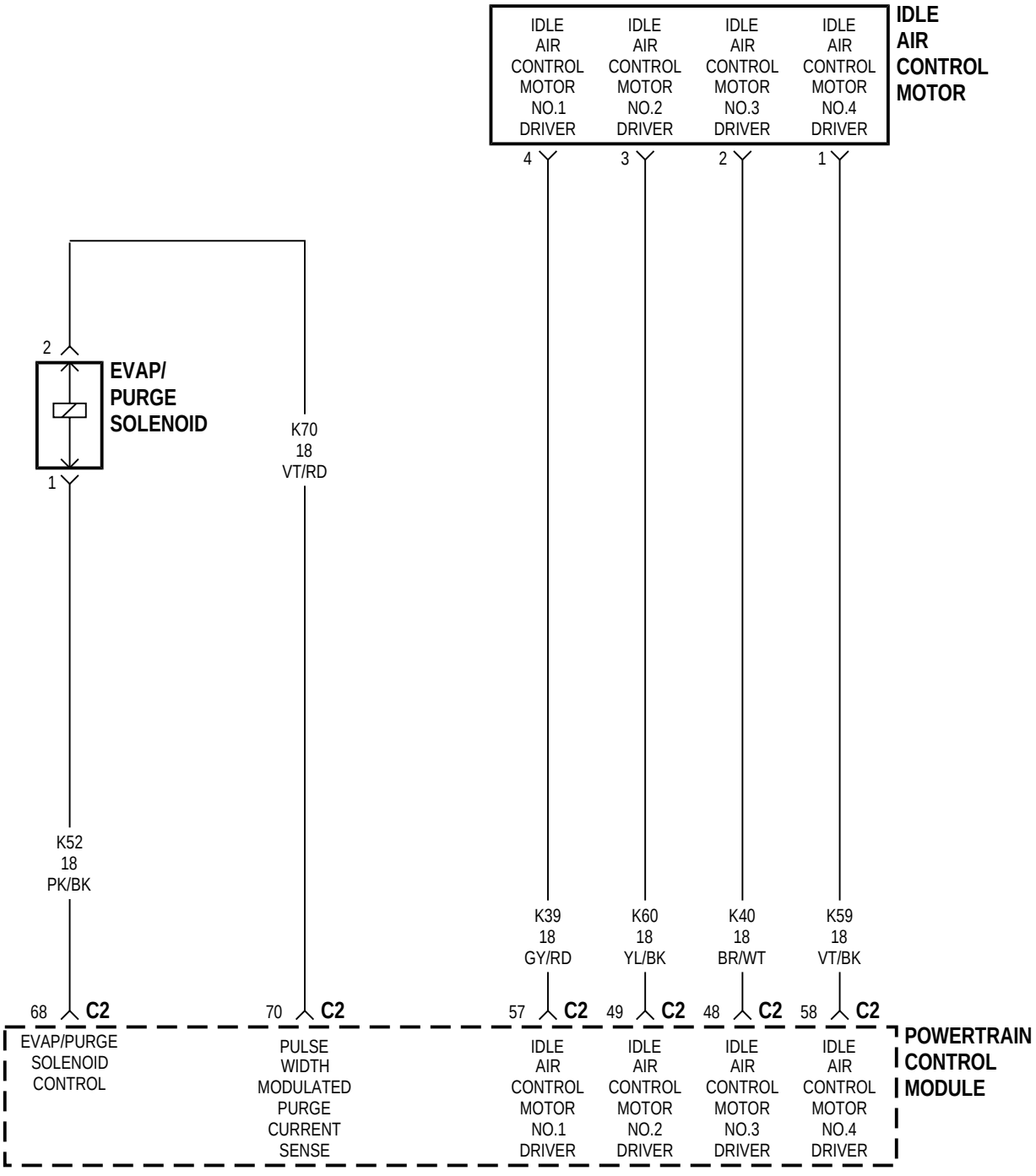
IDLE AIR CONTROL MOTOR NO.1 DRIVER
IDLE AIR CONTROL MOTOR NO.2 DRIVER
IDLE AIR CONTROL MOTOR NO.3 DRIVER
IDLE AIR CONTROL MOTOR NO.4 DRIVER
IDLE AIR CONTROL MOTOR
4
3
2
1
2
EVAP/ PURGE SOLENOID
1
K70
18
VT/RD
K52
18
PK/BK
K39
18
GY/RD
K60
18
YL/BK
K40
18
BR/WT
K59
18
VT/BK
68 C2
70 C2
57 C2
49 C2
48 C2
58 C2
EVAP/PURGE SOLENOID CONTROL
PULSE WIDTH MODULATED PURGE CURRENT SENSE
IDLE AIR CONTROL MOTOR NO.1 DRIVER
IDLE AIR CONTROL MOTOR NO.2 DRIVER
IDLE AIR CONTROL MOTOR NO.3 DRIVER
IDLE AIR CONTROL MOTOR NO.4 DRIVER
POWERTRAIN CONTROL MODULE

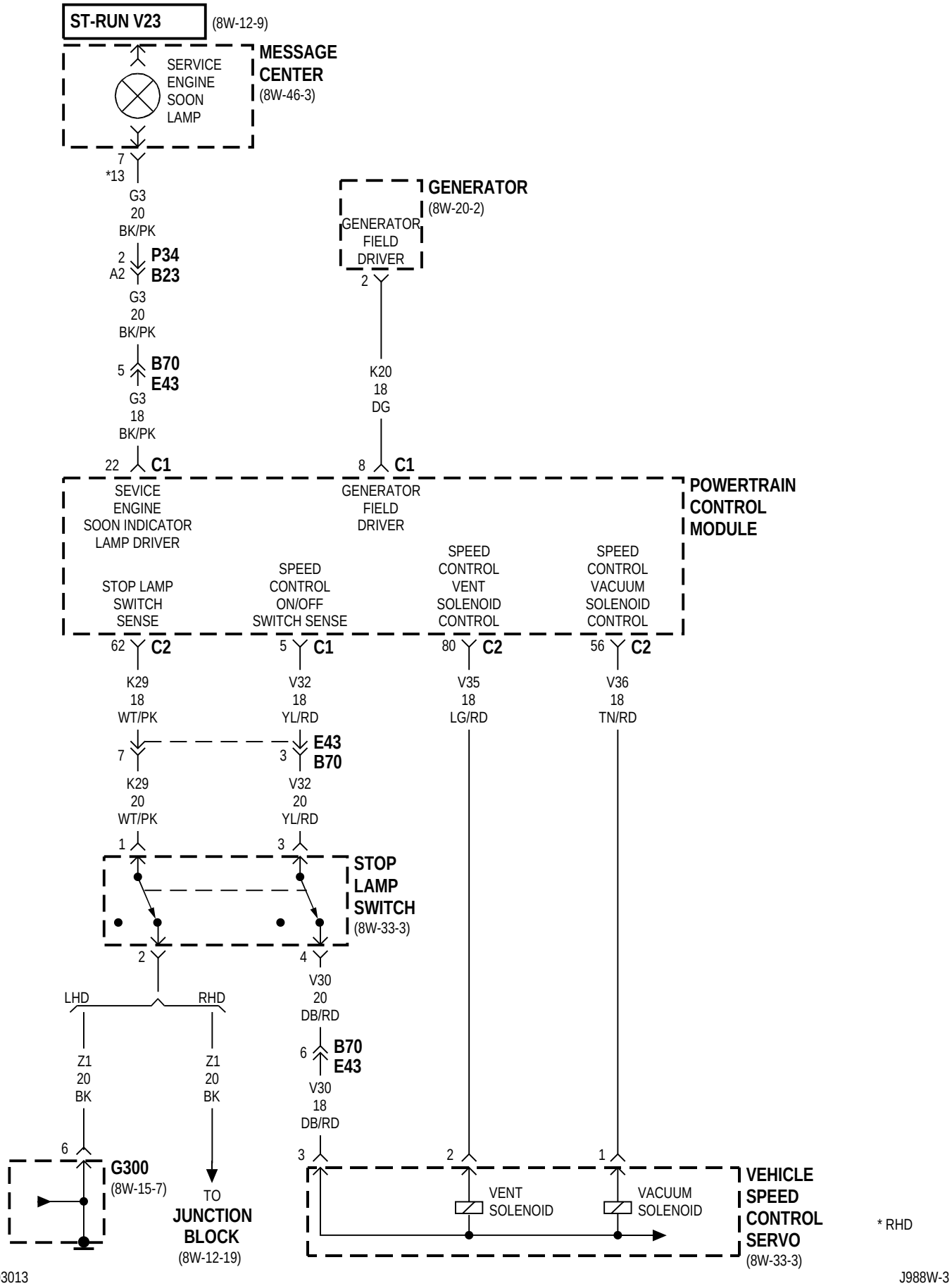
ST-RUN V23
(8W-12-9)
MESSAGE CENTER
(8W-46-3)
SERVICE ENGINE SOON LAMP
7
*13
G3
20
BK/PK
2
A2
P34
B23
G3
20
BK/PK
5
B70
E43
G3
18
BK/PK
22
C1
GENERATOR
(8W-20-2)
GENERATOR FIELD DRIVER
2
K20
18
DG
8
C1
POWERTRAIN CONTROL MODULE
SEVICE ENGINE SOON INDICATOR LAMP DRIVER
GENERATOR FIELD DRIVER
STOP LAMP SWITCH SENSE
SPEED CONTROL ON/OFF SWITCH SENSE
SPEED CONTROL VENT SOLENOID CONTROL
SPEED CONTROL VACUUM SOLENOID CONTROL
62
C2
5
C1
80
C2
56
C2
K29
18
WT/PK
V32
18
YL/RD
V35
18
LG/RD
V36
18
TN/RD
7
3
E43
B70
K29
20
WT/PK
V32
20
YL/RD
1
3
STOP LAMP SWITCH
(8W-33-3)
2
4
LHD
RHD
V30
20
DB/RD
6
B70
E43
V30
18
DB/RD
Z1
20
BK
Z1
20
BK
6
3
2
1
G300
(8W-15-7)
TO JUNCTION BLOCK
(8W-12-19)
VENT SOLENOID
VACUUM SOLENOID
VEHICLE SPEED CONTROL SERVO
(8W-33-3)
* RHD

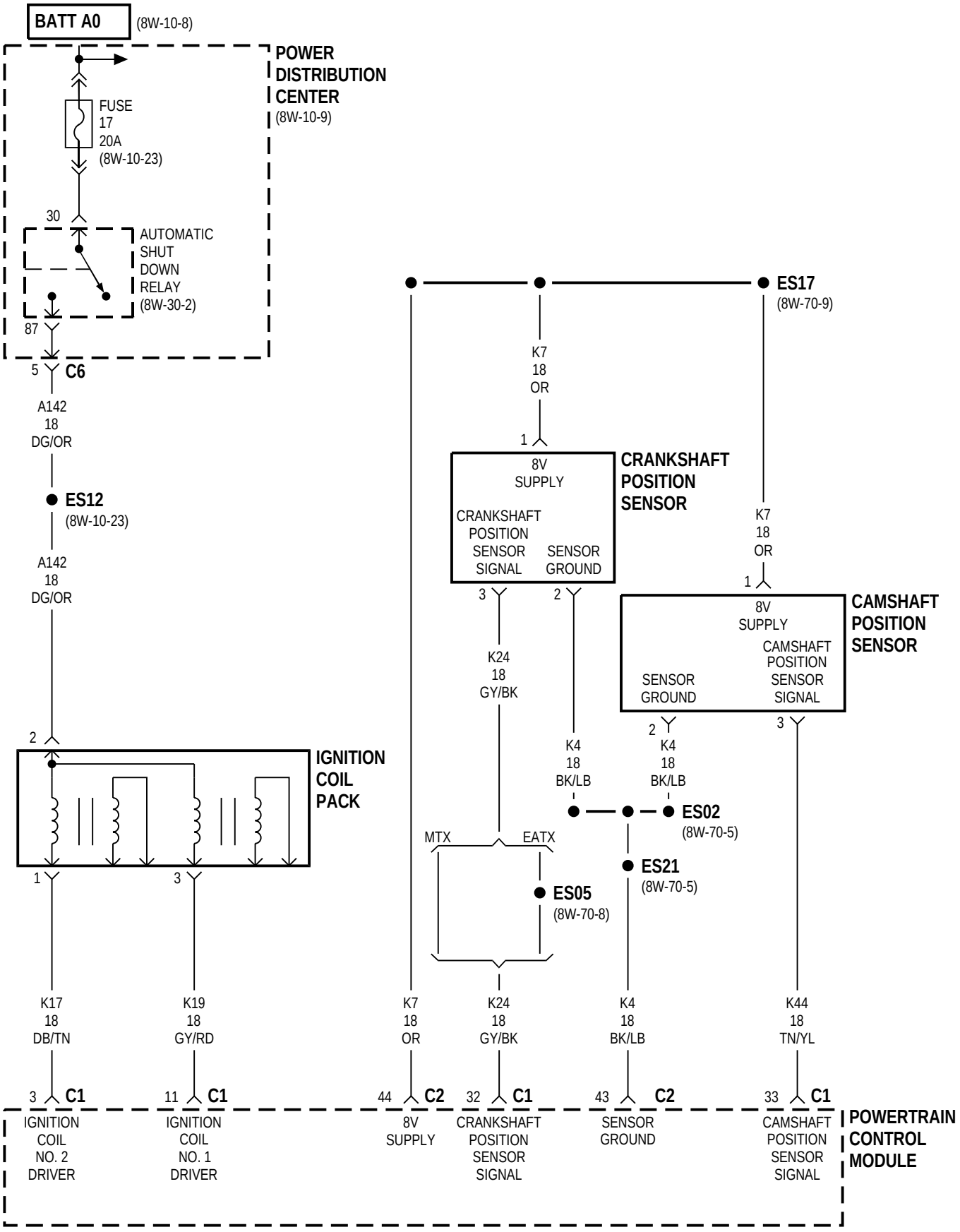
BATT A0
(8W-10-8)
POWER DISTRIBUTION CENTER
(8W-10-9)
FUSE 17 20A
(8W-10-23)
30
AUTOMATIC SHUT DOWN RELAY
(8W-30-2)
87
5
C6
A142 18 DG/OR
ES12
(8W-10-23)
A142 18 DG/OR
2
IGNITION COIL PACK
1
3
K17 18 DB/TN
K19 18 GY/RD
3
C1
11
C1
IGNITION COIL NO. 2 DRIVER
IGNITION COIL NO. 1 DRIVER
ES17
(8W-70-9)
K7 18 OR
1
8V SUPPLY
CRANKSHAFT POSITION SENSOR SIGNAL
SENSOR GROUND
CRANKSHAFT POSITION SENSOR
3
2
K24 18 GY/BK
K7 18 OR
1
8V SUPPLY
CAMSHAFT POSITION SENSOR SIGNAL
SENSOR GROUND
CAMSHAFT POSITION SENSOR
2
3
K4 18 BK/LB
K4 18 BK/LB
ES02
(8W-70-5)
ES21
(8W-70-5)
MTX
EATX
ES05
(8W-70-8)
K7 18 OR
K24 18 GY/BK
K4 18 BK/LB
K44 18 TN/YL
44
C2
32
C1
43
C2
33
C1
8V SUPPLY
CRANKSHAFT POSITION SENSOR SIGNAL
SENSOR GROUND
CAMSHAFT POSITION SENSOR SIGNAL
POWERTRAIN CONTROL MODULE

2.4L

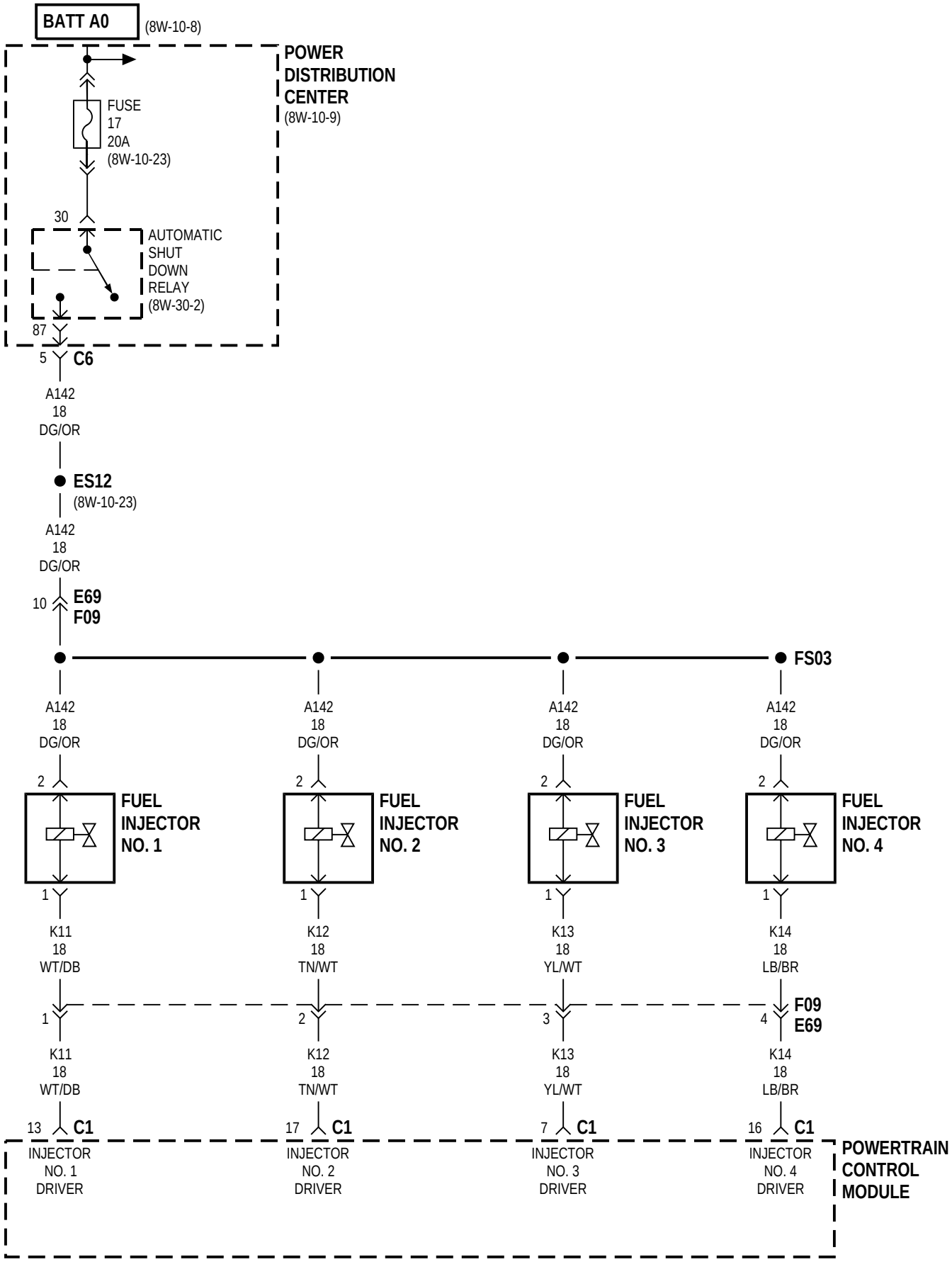
BATT A0
(8W-10-8)
POWER DISTRIBUTION CENTER
(8W-10-9)
FUSE 17 20A
(8W-10-23)
30
AUTOMATIC SHUT DOWN RELAY
(8W-30-2)
87
5
C6
A142 18 DG/OR
ES12
(8W-10-23)
A142 18 DG/OR
10
E69
F09
FS03
A142 18 DG/OR
2
FUEL INJECTOR NO. 1
1
K11 18 WT/DB
A142 18 DG/OR
2
FUEL INJECTOR NO. 2
1
K12 18 TN/WT
A142 18 DG/OR
2
FUEL INJECTOR NO. 3
1
K13 18 YL/WT
A142 18 DG/OR
2
FUEL INJECTOR NO. 4
1
K14 18 LB/BR
1
2
3
4
F09
E69
K11 18 WT/DB
K12 18 TN/WT
K13 18 YL/WT
K14 18 LB/BR
13
17
7
16
C1
INJECTOR NO. 1 DRIVER
INJECTOR NO. 2 DRIVER
INJECTOR NO. 3 DRIVER
INJECTOR NO. 4 DRIVER
POWERTRAIN CONTROL MODULE

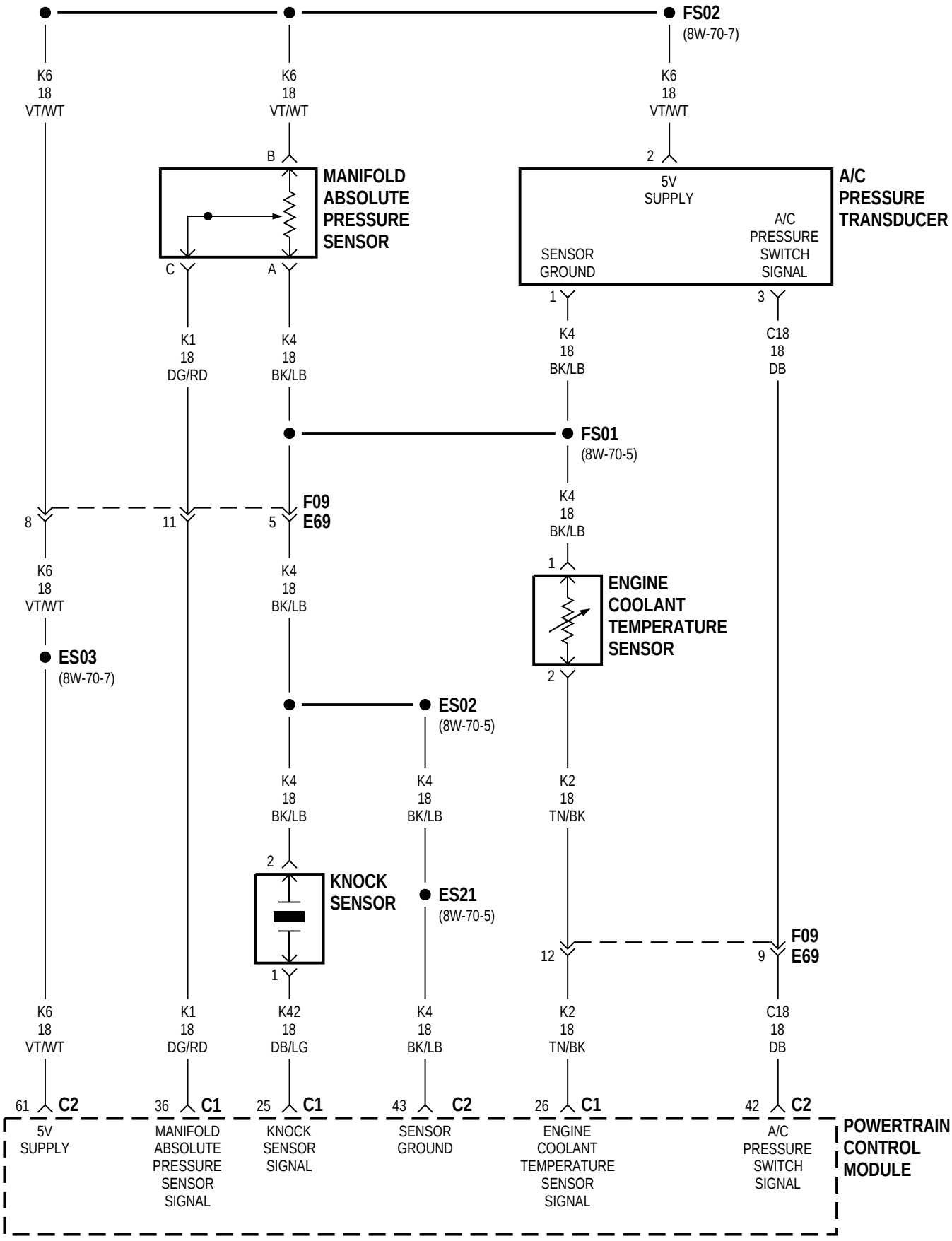
FS02
(8W-70-7)
K6 18 VT/WT
K6 18 VT/WT
K6 18 VT/WT
B
2
MANIFOLD ABSOLUTE PRESSURE SENSOR
5V SUPPLY
A/C PRESSURE TRANSDUCER
SENSOR GROUND
A/C PRESSURE SWITCH SIGNAL
C
A
1
3
K1 18 DG/RD
K4 18 BK/LB
K4 18 BK/LB
C18 18 DB
FS01
(8W-70-5)
K4 18 BK/LB
F09
E69
8
11
5
1
K6 18 VT/WT
K4 18 BK/LB
ENGINE COOLANT TEMPERATURE SENSOR
ES03
(8W-70-7)
2
ES02
(8W-70-5)
K4 18 BK/LB
K4 18 BK/LB
K2 18 TN/BK
2
KNOCK SENSOR
ES21
(8W-70-5)
F09
E69
12
9
1
K6 18 VT/WT
K1 18 DG/RD
K42 18 DB/LG
K4 18 BK/LB
K2 18 TN/BK
C18 18 DB
61 C2
36 C1
25 C1
43 C2
26 C1
42 C2
5V SUPPLY
MANIFOLD ABSOLUTE PRESSURE SENSOR SIGNAL
KNOCK SENSOR SIGNAL
SENSOR GROUND
ENGINE COOLANT TEMPERATURE SENSOR SIGNAL
A/C PRESSURE SWITCH SIGNAL
POWERTRAIN CONTROL MODULE

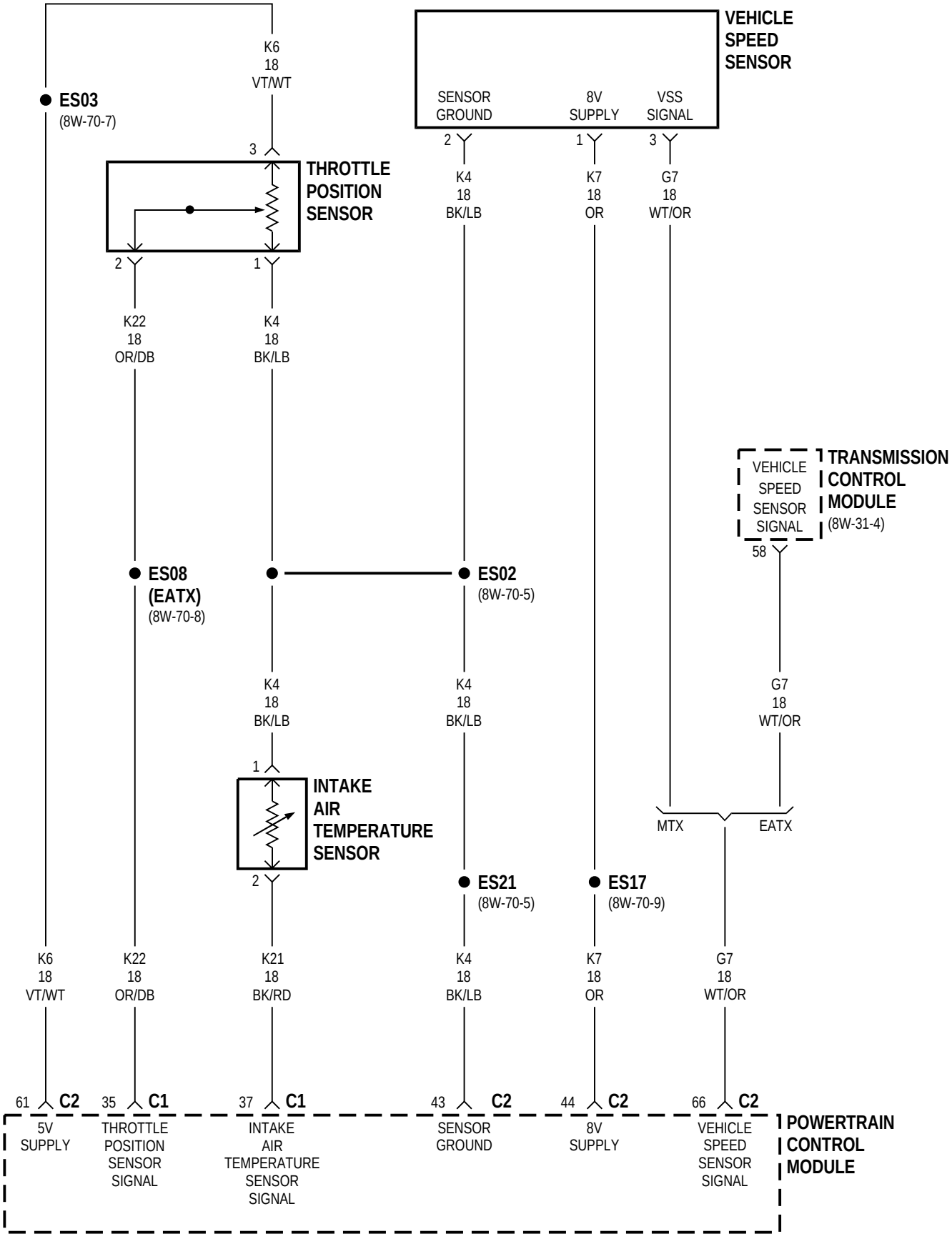
ES03
(8W-70-7)
K6
18
VT/WT
3
THROTTLE
POSITION
SENSOR
2
1
K22
18
OR/DB
K4
18
BK/LB
VEHICLE
SPEED
SENSOR
SENSOR
GROUND
8V
SUPPLY
VSS
SIGNAL
2
1
3
K4
18
BK/LB
K7
18
OR
G7
18
WT/OR
TRANSMISSION
CONTROL
MODULE
(8W-31-4)
VEHICLE
SPEED
SENSOR
SIGNAL
58
ES08
(EATX)
(8W-70-8)
ES02
(8W-70-5)
K4
18
BK/LB
K4
18
BK/LB
G7
18
WT/OR
1
INTAKE
AIR
TEMPERATURE
SENSOR
2
MTX
EATX
ES21
(8W-70-5)
ES17
(8W-70-9)
K6
18
VT/WT
K22
18
OR/DB
K21
18
BK/RD
K4
18
BK/LB
K7
18
OR
G7
18
WT/OR
61 C2
35 C1
37 C1
43 C2
44 C2
66 C2
5V
SUPPLY
THROTTLE
POSITION
SENSOR
SIGNAL
INTAKE
AIR
TEMPERATURE
SENSOR
SIGNAL
SENSOR
GROUND
8V
SUPPLY
VEHICLE
SPEED
SENSOR
SIGNAL
POWERTRAIN
CONTROL
MODULE

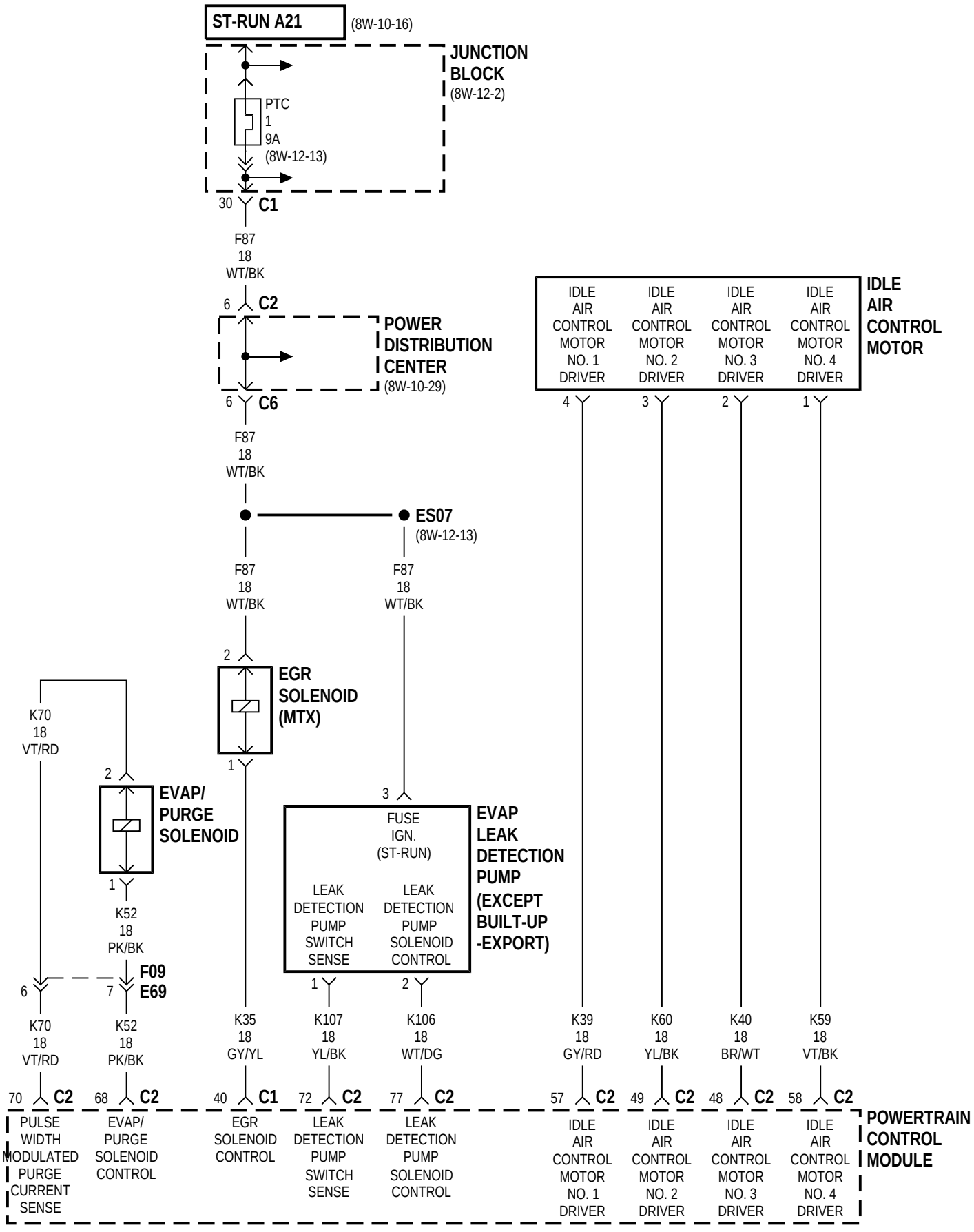
ST-RUN A21
(8W-10-16)
JUNCTION BLOCK
(8W-12-2)
PTC
1
9A
(8W-12-13)
30
C1
F87
18
WT/BK
6
C2
POWER DISTRIBUTION CENTER
(8W-10-29)
6
C6
F87
18
WT/BK
ES07
(8W-12-13)
F87
18
WT/BK
F87
18
WT/BK
2
EGR SOLENOID (MTX)
1
K70
18
VT/RD
2
EVAP/ PURGE SOLENOID
1
K52
18
PK/BK
F09
E69
6
7
K70
18
VT/RD
K52
18
PK/BK
3
FUSE
IGN.
(ST-RUN)
LEAK DETECTION PUMP SWITCH SENSE
LEAK DETECTION PUMP SOLENOID CONTROL
EVAP LEAK DETECTION PUMP (EXCEPT BUILT-UP -EXPORT)
1
2
K35
18
GY/YL
K107
18
YL/BK
K106
18
WT/DG
IDLE AIR CONTROL MOTOR NO. 1 DRIVER
IDLE AIR CONTROL MOTOR NO. 2 DRIVER
IDLE AIR CONTROL MOTOR NO. 3 DRIVER
IDLE AIR CONTROL MOTOR NO. 4 DRIVER
IDLE AIR CONTROL MOTOR
4
3
2
1
K39
18
GY/RD
K60
18
YL/BK
K40
18
BR/WT
K59
18
VT/BK
70 C2
68 C2
40 C1
72 C2
77 C2
57 C2
49 C2
48 C2
58 C2
PULSE WIDTH MODULATED PURGE CURRENT SENSE
EVAP/ PURGE SOLENOID CONTROL
EGR SOLENOID CONTROL
LEAK DETECTION PUMP SWITCH SENSE
LEAK DETECTION PUMP SOLENOID CONTROL
IDLE AIR CONTROL MOTOR NO. 1 DRIVER
IDLE AIR CONTROL MOTOR NO. 2 DRIVER
IDLE AIR CONTROL MOTOR NO. 3 DRIVER
IDLE AIR CONTROL MOTOR NO. 4 DRIVER
POWERTRAIN CONTROL MODULE

2.4L

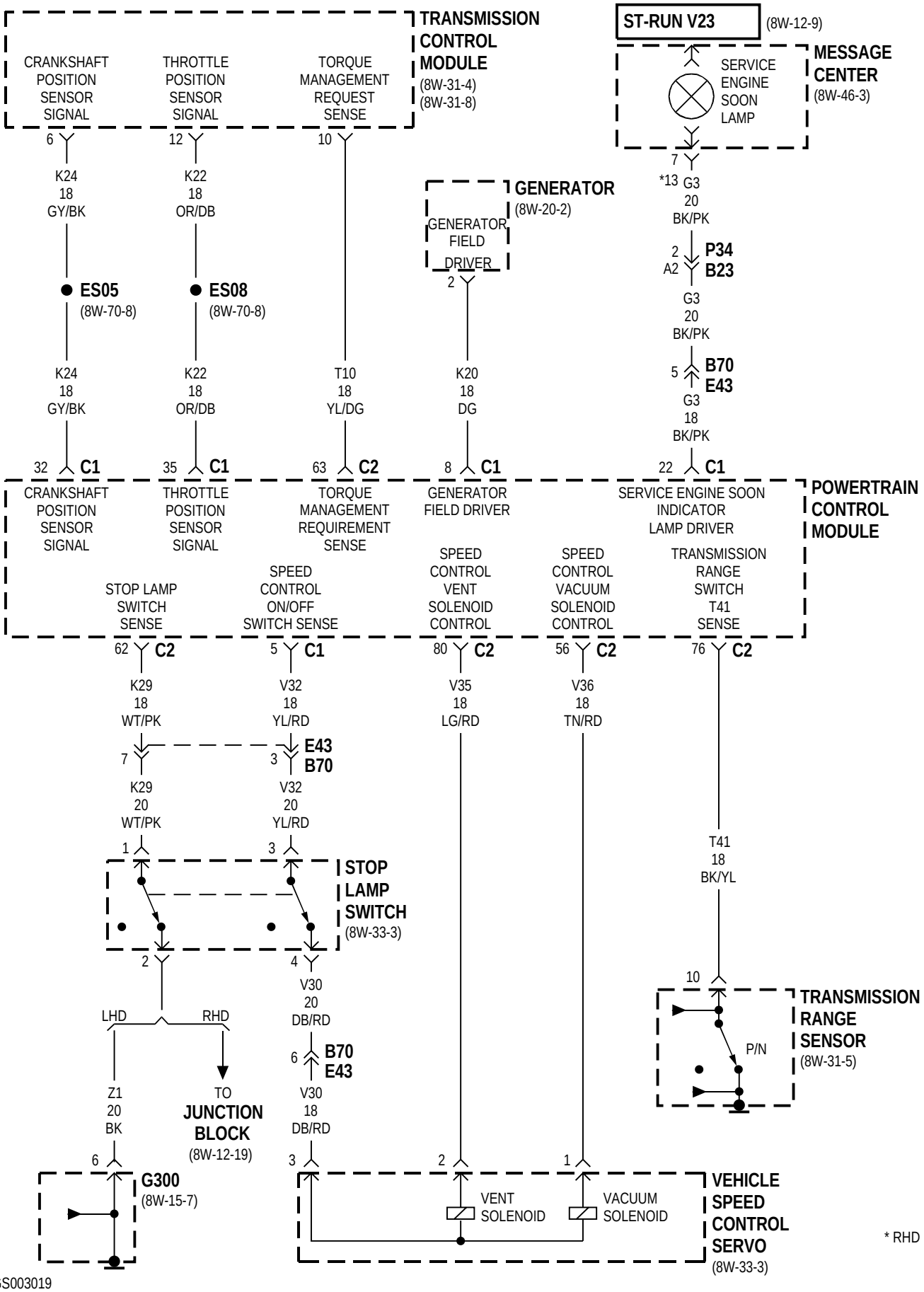
TRANSMISSION CONTROL MODULE
(8W-31-4)
(8W-31-8)
CRANKSHAFT POSITION SENSOR SIGNAL
THROTTLE POSITION SENSOR SIGNAL
TORQUE MANAGEMENT REQUEST SENSE
ST-RUN V23
(8W-12-9)
MESSAGE CENTER
(8W-46-3)
SERVICE ENGINE SOON LAMP
GENERATOR
(8W-20-2)
GENERATOR FIELD DRIVER
6
12
10
7
*13
K24 18 GY/BK
K22 18 OR/DB
G3 20 BK/PK
2
A2
P34
B23
ES05
(8W-70-8)
ES08
(8W-70-8)
G3 20 BK/PK
5
B70
E43
G3 18 BK/PK
K24 18 GY/BK
K22 18 OR/DB
T10 18 YL/DG
K20 18 DG
32 C1
35 C1
63 C2
8 C1
22 C1
POWERTRAIN CONTROL MODULE
CRANKSHAFT POSITION SENSOR SIGNAL
THROTTLE POSITION SENSOR SIGNAL
TORQUE MANAGEMENT REQUIREMENT SENSE
GENERATOR FIELD DRIVER
SERVICE ENGINE SOON INDICATOR LAMP DRIVER
STOP LAMP SWITCH SENSE
SPEED CONTROL ON/OFF SWITCH SENSE
SPEED CONTROL VENT SOLENOID CONTROL
SPEED CONTROL VACUUM SOLENOID CONTROL
TRANSMISSION RANGE SWITCH T41 SENSE
62 C2
5 C1
80 C2
56 C2
76 C2
K29 18 WT/PK
V32 18 YL/RD
V35 18 LG/RD
V36 18 TN/RD
7
3
E43
B70
K29 20 WT/PK
V32 20 YL/RD
T41 18 BK/YL
1
3
STOP LAMP SWITCH
(8W-33-3)
2
4
10
TRANSMISSION RANGE SENSOR
(8W-31-5)
P/N
V30 20 DB/RD
LHD
RHD
6
B70
E43
Z1 20 BK
TO JUNCTION BLOCK
(8W-12-19)
V30 18 DB/RD
6
3
2
1
G300
(8W-15-7)
VENT SOLENOID
VACUUM SOLENOID
VEHICLE SPEED CONTROL SERVO
(8W-33-3)
* RHD

3.3L/3.8L

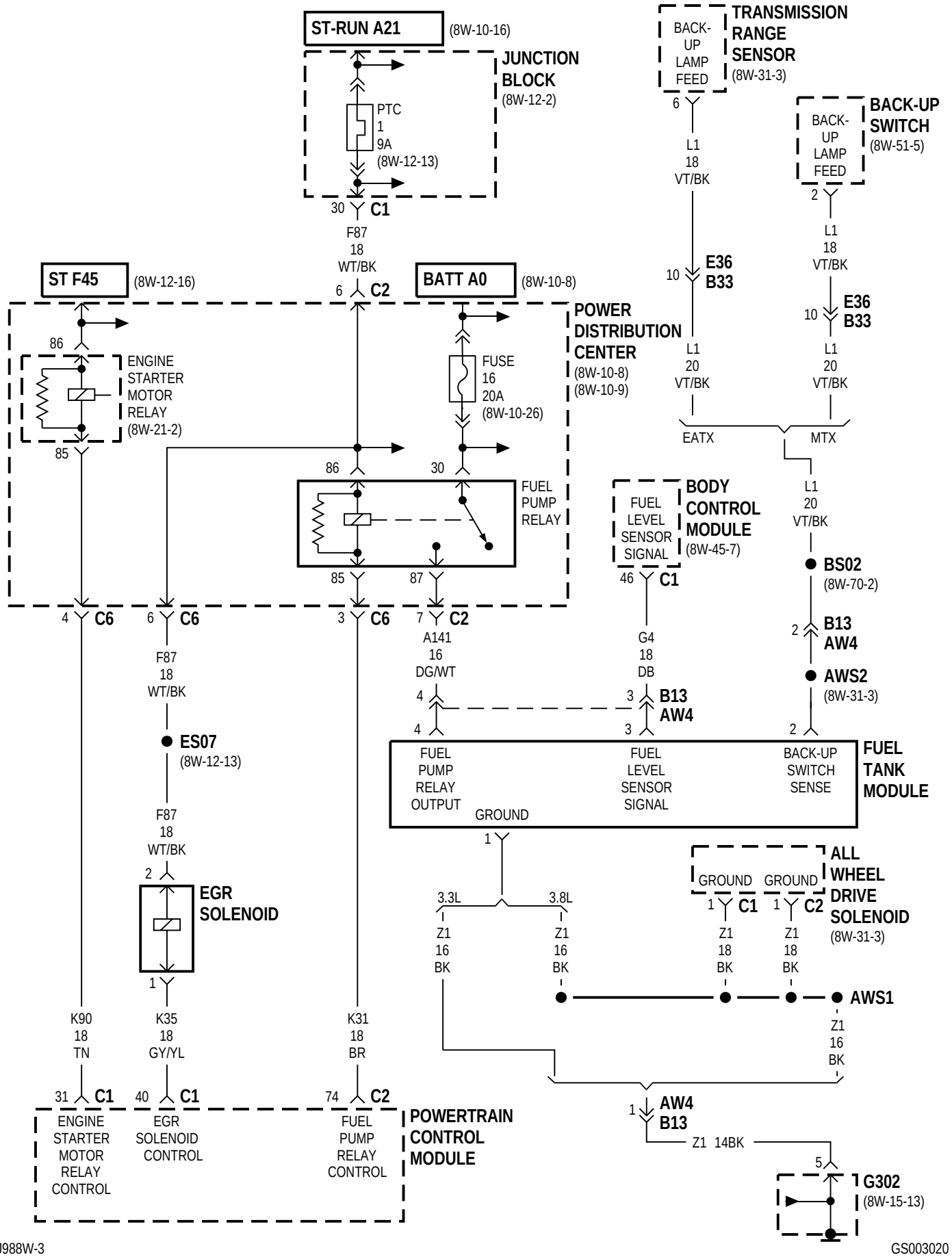
ST-RUN A21
(8W-10-16)
JUNCTION BLOCK
(8W-12-2)
PTC
1
9A
(8W-12-13)
30 C1
F87
18
WT/BK
TRANSMISSION RANGE SENSOR
(8W-31-3)
BACK-UP LAMP FEED
6
L1
18
VT/BK
10 E36 B33
L1
20
VT/BK
EATX
BACK-UP SWITCH
(8W-51-5)
BACK-UP LAMP FEED
2
L1
18
VT/BK
10 E36 B33
L1
20
VT/BK
MTX
ST F45
(8W-12-16)
BATT A0
(8W-10-8)
6 C2
POWER DISTRIBUTION CENTER
(8W-10-8)
(8W-10-9)
86
ENGINE STARTER MOTOR RELAY
(8W-21-2)
85
FUSE
16
20A
(8W-10-26)
86
30
FUEL PUMP RELAY
85
87
FUEL LEVEL SENSOR SIGNAL
BODY CONTROL MODULE
(8W-45-7)
46 C1
L1
20
VT/BK
BS02
(8W-70-2)
2 B13 AW4
AWS2
(8W-31-3)
4 C6
6 C6
3 C6
7 C2
F87
18
WT/BK
A141
16
DG/WT
G4
18
DB
4 B13 AW4 3
4
3
2
FUEL PUMP RELAY OUTPUT
FUEL LEVEL SENSOR SIGNAL
BACK-UP SWITCH SENSE
GROUND
FUEL TANK MODULE
ES07
(8W-12-13)
F87
18
WT/BK
2
EGR SOLENOID
1
1
3.3L
3.8L
Z1
16
BK
Z1
16
BK
GROUND
GROUND
1 C1
1 C2
Z1
18
BK
Z1
18
BK
ALL WHEEL DRIVE SOLENOID
(8W-31-3)
AWS1
Z1
16
BK
K90
18
TN
K35
18
GY/YL
K31
18
BR
31 C1
40 C1
74 C2
ENGINE STARTER MOTOR RELAY CONTROL
EGR SOLENOID CONTROL
FUEL PUMP RELAY CONTROL
POWERTRAIN CONTROL MODULE
1 AW4 B13
Z1 14BK
5
G302
(8W-15-13)

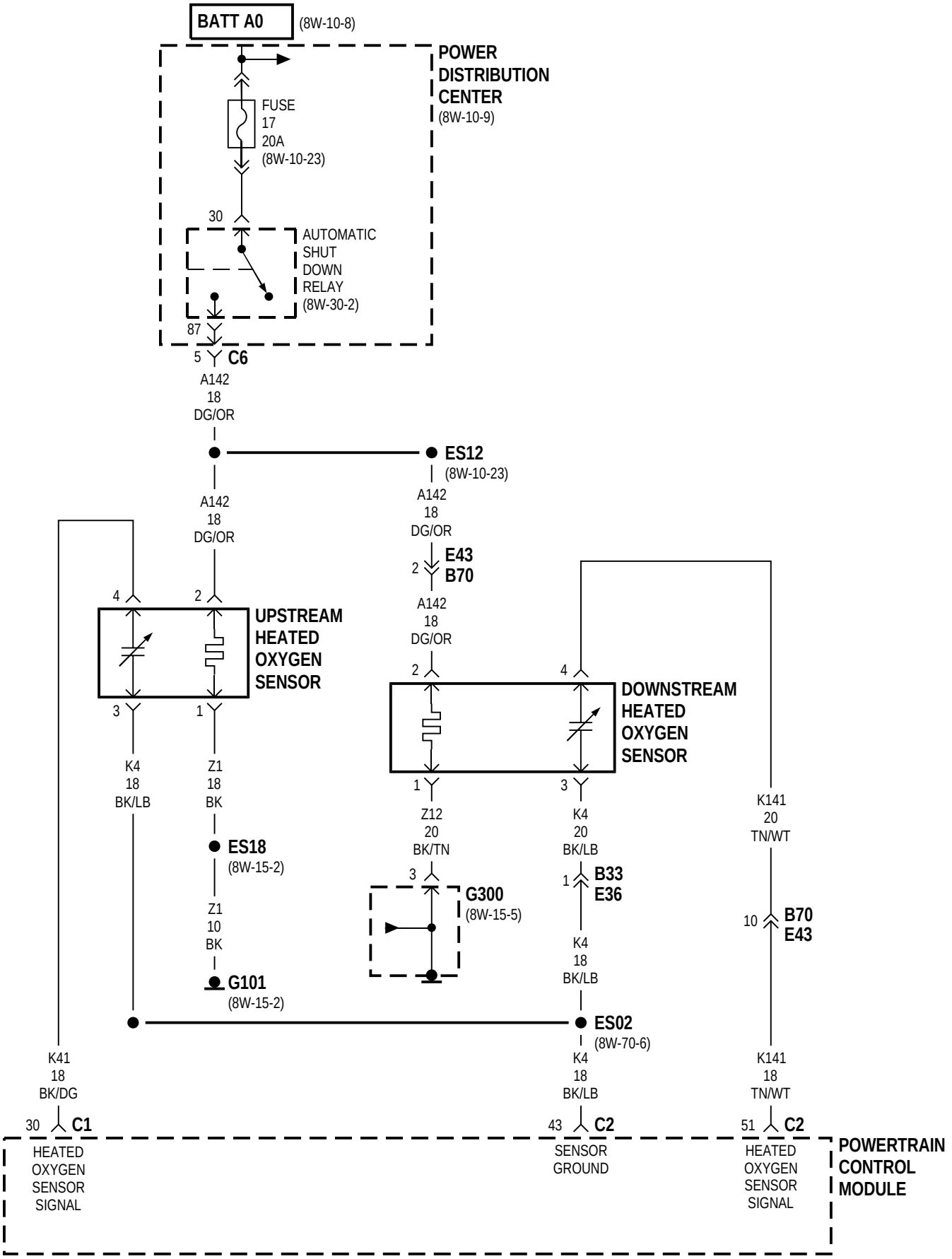
BATT A0
(8W-10-8)
POWER DISTRIBUTION CENTER
(8W-10-9)
FUSE 17 20A
(8W-10-23)
30
AUTOMATIC SHUT DOWN RELAY
(8W-30-2)
87
5
C6
A142 18 DG/OR
ES12
(8W-10-23)
A142 18 DG/OR
E43
B70
A142 18 DG/OR
4
2
UPSTREAM HEATED OXYGEN SENSOR
3
1
K4 18 BK/LB
Z1 18 BK
ES18
(8W-15-2)
Z1 10 BK
G101
(8W-15-2)
2
4
DOWNSTREAM HEATED OXYGEN SENSOR
1
3
Z12 20 BK/TN
3
G300
(8W-15-5)
K4 20 BK/LB
1
B33
E36
K4 18 BK/LB
ES02
(8W-70-6)
K141 20 TN/WT
10
B70
E43
K41 18 BK/DG
30
C1
HEATED OXYGEN SENSOR SIGNAL
K4 18 BK/LB
43
C2
SENSOR GROUND
K141 18 TN/WT
51
C2
HEATED OXYGEN SENSOR SIGNAL
POWERTRAIN CONTROL MODULE

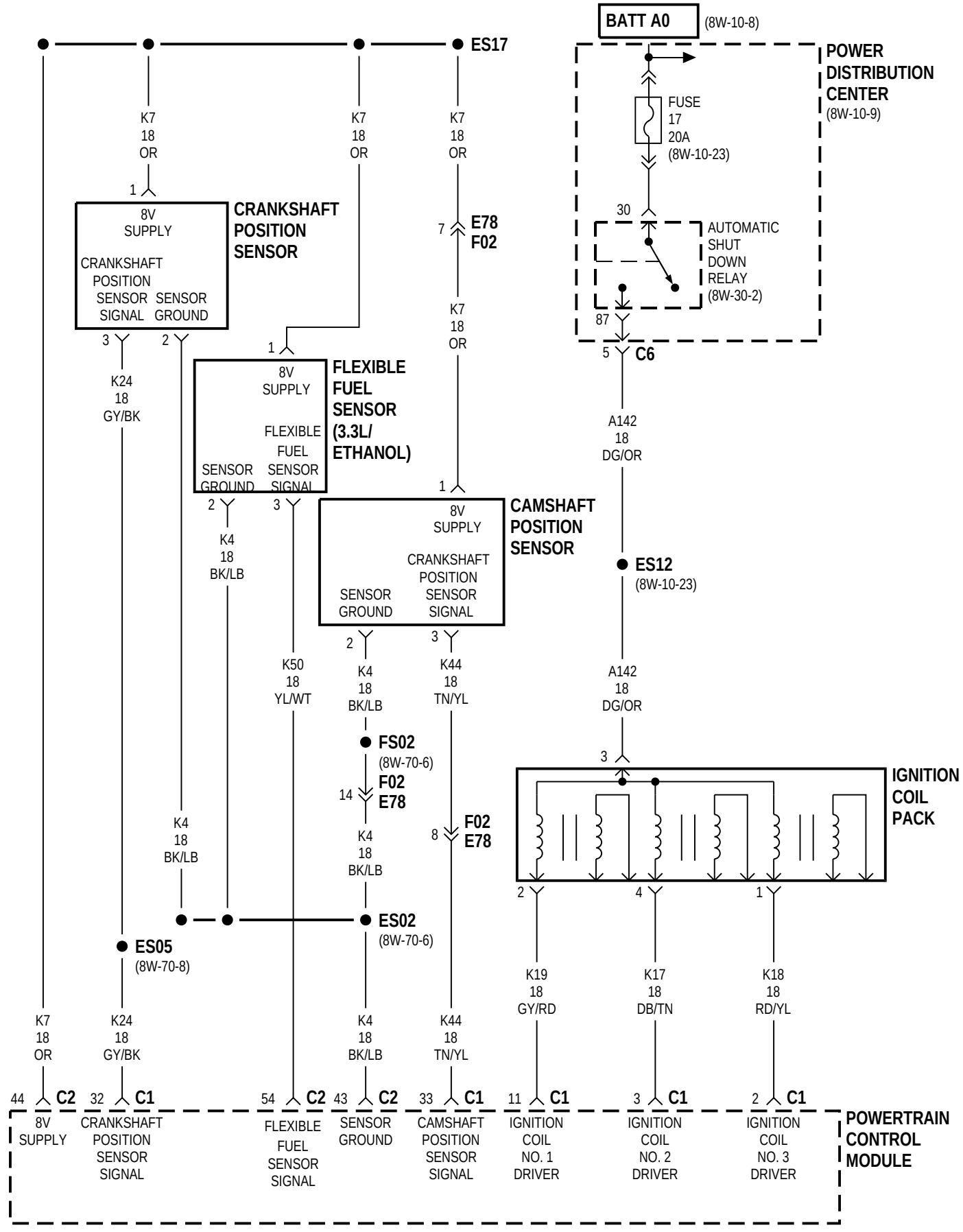
BATT A0
(8W-10-8)
ES17
POWER DISTRIBUTION CENTER
(8W-10-9)
FUSE 17 20A
(8W-10-23)
30
AUTOMATIC SHUT DOWN RELAY
(8W-30-2)
87
5
C6
A142 18 DG/OR
ES12
(8W-10-23)
A142 18 DG/OR
3
IGNITION COIL PACK
2
4
1
K19 18 GY/RD
K17 18 DB/TN
K18 18 RD/YL
K7 18 OR
1
8V SUPPLY
CRANKSHAFT POSITION SENSOR SIGNAL
CRANKSHAFT POSITION SENSOR GROUND
CRANKSHAFT POSITION SENSOR
3
2
K24 18 GY/BK
ES05
(8W-70-8)
K24 18 GY/BK
K7 18 OR
7
E78
F02
K7 18 OR
1
8V SUPPLY
FLEXIBLE FUEL SENSOR SIGNAL
SENSOR GROUND
FLEXIBLE FUEL SENSOR (3.3L/ ETHANOL)
2
3
K4 18 BK/LB
K50 18 YL/WT
K4 18 BK/LB
K4 18 BK/LB
ES02
(8W-70-6)
K4 18 BK/LB
K7 18 OR
1
8V SUPPLY
CRANKSHAFT POSITION SENSOR SIGNAL
SENSOR GROUND
CAMSHAFT POSITION SENSOR
2
3
K4 18 BK/LB
K44 18 TN/YL
FS02
(8W-70-6)
F02
E78
14
F02
E78
8
K44 18 TN/YL
44
C2
8V SUPPLY
32
C1
CRANKSHAFT POSITION SENSOR SIGNAL
54
C2
FLEXIBLE FUEL SENSOR SIGNAL
43
C2
SENSOR GROUND
33
C1
CAMSHAFT POSITION SENSOR SIGNAL
11
C1
IGNITION COIL NO. 1 DRIVER
3
C1
IGNITION COIL NO. 2 DRIVER
2
C1
IGNITION COIL NO. 3 DRIVER
POWERTRAIN CONTROL MODULE

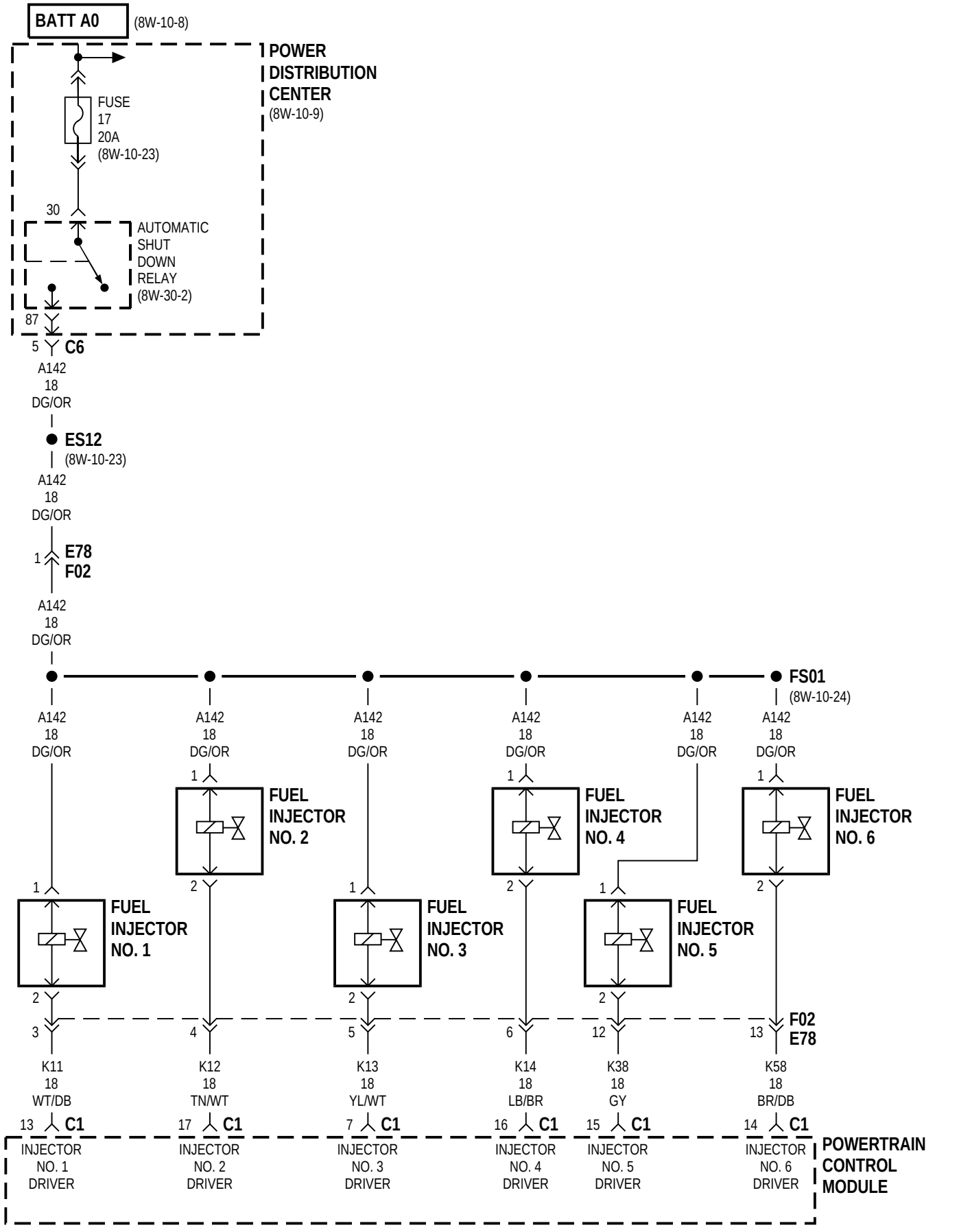
BATT A0
(8W-10-8)
POWER DISTRIBUTION CENTER
(8W-10-9)
FUSE 17 20A
(8W-10-23)
30
AUTOMATIC SHUT DOWN RELAY
(8W-30-2)
87
5
C6
A142 18 DG/OR
ES12
(8W-10-23)
A142 18 DG/OR
1
E78
F02
A142 18 DG/OR
FS01
(8W-10-24)
FUEL INJECTOR NO. 1
FUEL INJECTOR NO. 2
FUEL INJECTOR NO. 3
FUEL INJECTOR NO. 4
FUEL INJECTOR NO. 5
FUEL INJECTOR NO. 6
F02
E78
K11 18 WT/DB
K12 18 TN/WT
K13 18 YL/WT
K14 18 LB/BR
K38 18 GY
K58 18 BR/DB
13 C1
17 C1
7 C1
16 C1
15 C1
14 C1
INJECTOR NO. 1 DRIVER
INJECTOR NO. 2 DRIVER
INJECTOR NO. 3 DRIVER
INJECTOR NO. 4 DRIVER
INJECTOR NO. 5 DRIVER
INJECTOR NO. 6 DRIVER
POWERTRAIN CONTROL MODULE

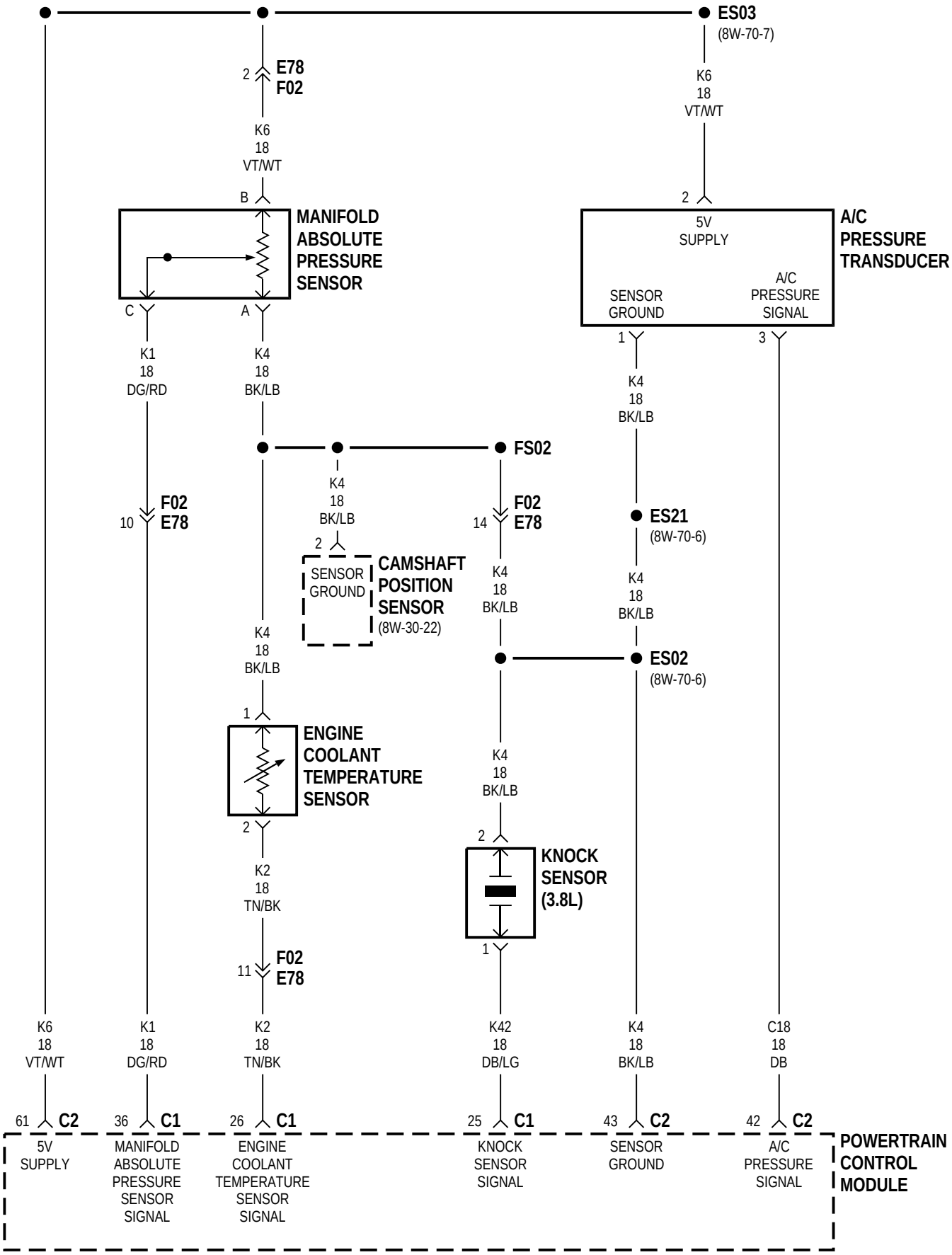
ES03
(8W-70-7)
K6
18
VT/WT
2
E78
F02
K6
18
VT/WT
B
MANIFOLD
ABSOLUTE
PRESSURE
SENSOR
C
A
2
5V
SUPPLY
A/C
PRESSURE
TRANSDUCER
SENSOR
GROUND
A/C
PRESSURE
SIGNAL
1
3
K1
18
DG/RD
K4
18
BK/LB
K4
18
BK/LB
FS02
F02
E78
10
K4
18
BK/LB
2
SENSOR
GROUND
CAMSHAFT
POSITION
SENSOR
(8W-30-22)
14
F02
E78
ES21
(8W-70-6)
K4
18
BK/LB
K4
18
BK/LB
ES02
(8W-70-6)
1
ENGINE
COOLANT
TEMPERATURE
SENSOR
2
K4
18
BK/LB
2
KNOCK
SENSOR
(3.8L)
K2
18
TN/BK
11
F02
E78
1
K6
18
VT/WT
K1
18
DG/RD
K2
18
TN/BK
K42
18
DB/LG
K4
18
BK/LB
C18
18
DB
61
C2
36
C1
26
C1
25
C1
43
C2
42
C2
5V
SUPPLY
MANIFOLD
ABSOLUTE
PRESSURE
SENSOR
SIGNAL
ENGINE
COOLANT
TEMPERATURE
SENSOR
SIGNAL
KNOCK
SENSOR
SIGNAL
SENSOR
GROUND
A/C
PRESSURE
SIGNAL
POWERTRAIN
CONTROL
MODULE

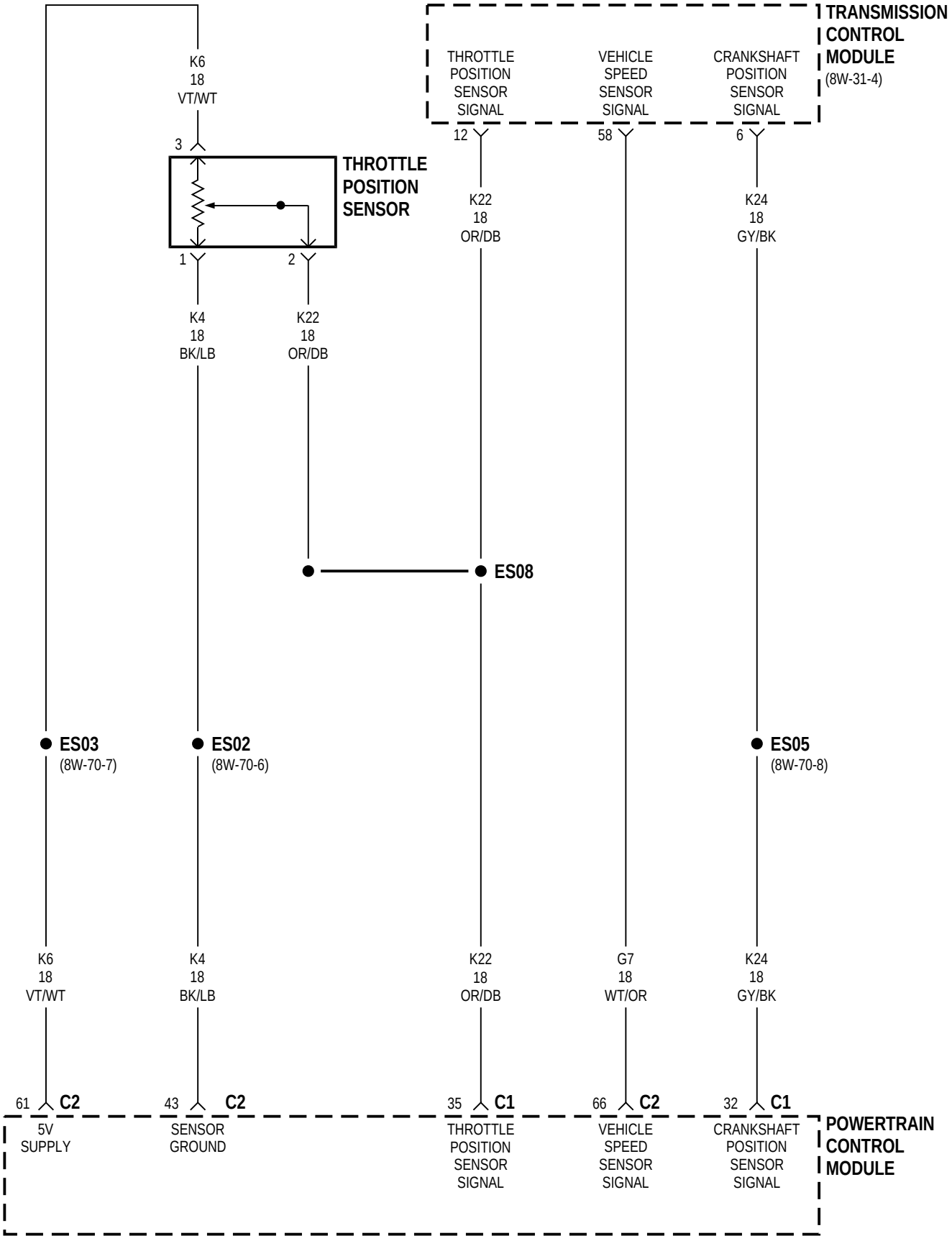
TRANSMISSION CONTROL MODULE
(8W-31-4)
THROTTLE POSITION SENSOR SIGNAL
VEHICLE SPEED SENSOR SIGNAL
CRANKSHAFT POSITION SENSOR SIGNAL
12
58
6
K6 18 VT/WT
3
THROTTLE POSITION SENSOR
1
2
K22 18 OR/DB
K24 18 GY/BK
K4 18 BK/LB
K22 18 OR/DB
ES08
ES03
(8W-70-7)
ES02
(8W-70-6)
ES05
(8W-70-8)
K6 18 VT/WT
K4 18 BK/LB
K22 18 OR/DB
G7 18 WT/OR
K24 18 GY/BK
61 C2
43 C2
35 C1
66 C2
32 C1
5V SUPPLY
SENSOR GROUND
THROTTLE POSITION SENSOR SIGNAL
VEHICLE SPEED SENSOR SIGNAL
CRANKSHAFT POSITION SENSOR SIGNAL
POWERTRAIN CONTROL MODULE

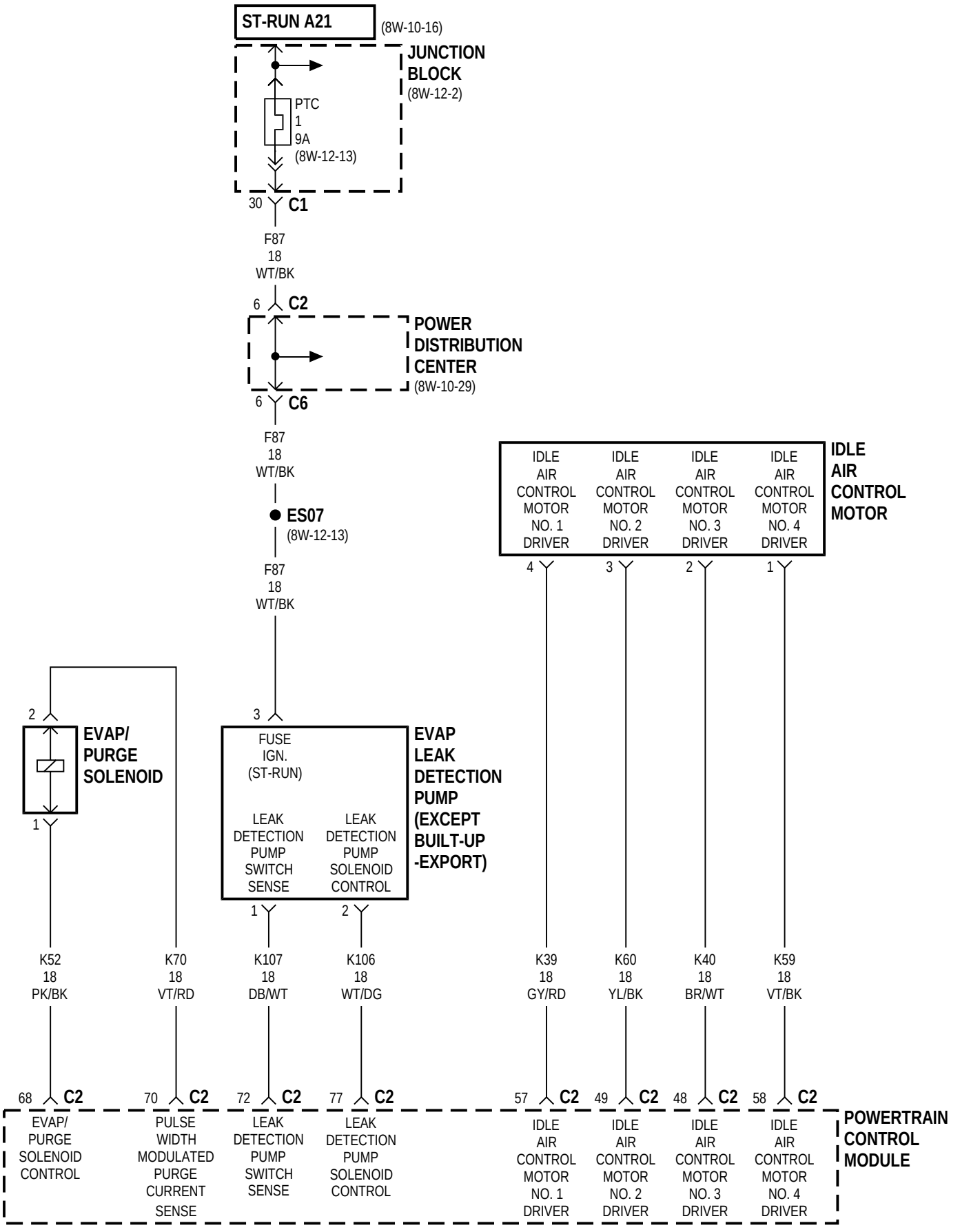
ST-RUN A21
(8W-10-16)
JUNCTION BLOCK
(8W-12-2)
PTC
1
9A
(8W-12-13)
30
C1
F87
18
WT/BK
6
C2
POWER DISTRIBUTION CENTER
(8W-10-29)
6
C6
F87
18
WT/BK
ES07
(8W-12-13)
F87
18
WT/BK
IDLE AIR CONTROL MOTOR
IDLE AIR CONTROL MOTOR NO. 1 DRIVER
IDLE AIR CONTROL MOTOR NO. 2 DRIVER
IDLE AIR CONTROL MOTOR NO. 3 DRIVER
IDLE AIR CONTROL MOTOR NO. 4 DRIVER
4
3
2
1
2
EVAP/ PURGE SOLENOID
1
3
EVAP LEAK DETECTION PUMP (EXCEPT BUILT-UP -EXPORT)
FUSE IGN. (ST-RUN)
LEAK DETECTION PUMP SWITCH SENSE
LEAK DETECTION PUMP SOLENOID CONTROL
1
2
K52
18
PK/BK
K70
18
VT/RD
K107
18
DB/WT
K106
18
WT/DG
K39
18
GY/RD
K60
18
YL/BK
K40
18
BR/WT
K59
18
VT/BK
68 C2
70 C2
72 C2
77 C2
57 C2
49 C2
48 C2
58 C2
EVAP/ PURGE SOLENOID CONTROL
PULSE WIDTH MODULATED PURGE CURRENT SENSE
LEAK DETECTION PUMP SWITCH SENSE
LEAK DETECTION PUMP SOLENOID CONTROL
IDLE AIR CONTROL MOTOR NO. 1 DRIVER
IDLE AIR CONTROL MOTOR NO. 2 DRIVER
IDLE AIR CONTROL MOTOR NO. 3 DRIVER
IDLE AIR CONTROL MOTOR NO. 4 DRIVER
POWERTRAIN CONTROL MODULE

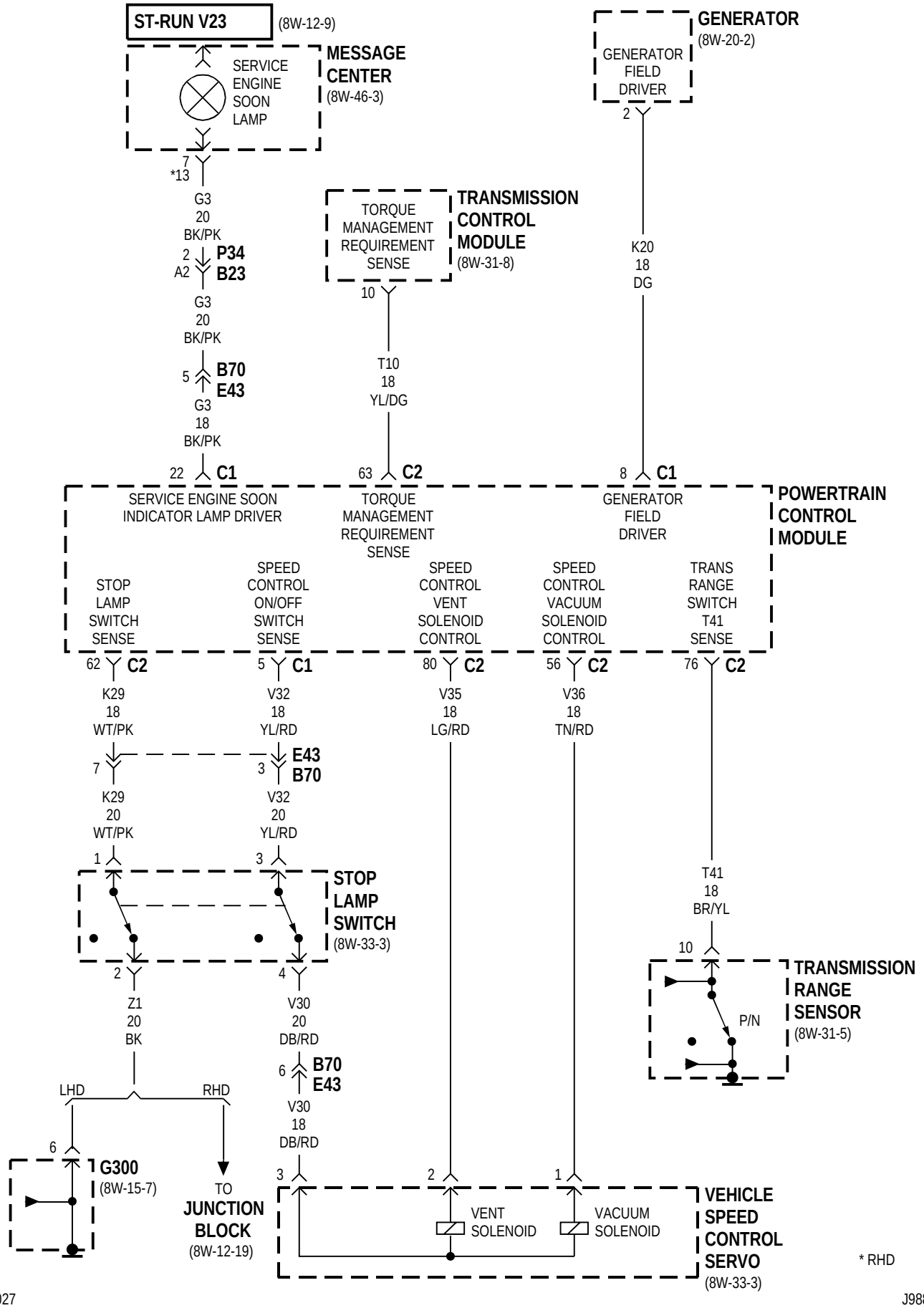
ST-RUN V23
(8W-12-9)
MESSAGE CENTER
(8W-46-3)
SERVICE ENGINE SOON LAMP
7
*13
G3
20
BK/PK
2
A2
P34
B23
G3
20
BK/PK
5
B70
E43
G3
18
BK/PK
22
C1
TORQUE MANAGEMENT REQUIREMENT SENSE
TRANSMISSION CONTROL MODULE
(8W-31-8)
10
T10
18
YL/DG
63
C2
GENERATOR
(8W-20-2)
GENERATOR FIELD DRIVER
2
K20
18
DG
8
C1
SERVICE ENGINE SOON INDICATOR LAMP DRIVER
TORQUE MANAGEMENT REQUIREMENT SENSE
GENERATOR FIELD DRIVER
POWERTRAIN CONTROL MODULE
STOP LAMP SWITCH SENSE
SPEED CONTROL ON/OFF SWITCH SENSE
SPEED CONTROL VENT SOLENOID CONTROL
SPEED CONTROL VACUUM SOLENOID CONTROL
TRANS RANGE SWITCH T41 SENSE
62
C2
5
C1
80
C2
56
C2
76
C2
K29
18
WT/PK
V32
18
YL/RD
V35
18
LG/RD
V36
18
TN/RD
7
3
E43
B70
K29
20
WT/PK
V32
20
YL/RD
1
3
STOP LAMP SWITCH
(8W-33-3)
2
4
Z1
20
BK
V30
20
DB/RD
6
B70
E43
V30
18
DB/RD
T41
18
BR/YL
10
TRANSMISSION RANGE SENSOR
(8W-31-5)
P/N
LHD
RHD
6
G300
(8W-15-7)
TO JUNCTION BLOCK
(8W-12-19)
3
2
1
VENT SOLENOID
VACUUM SOLENOID
VEHICLE SPEED CONTROL SERVO
(8W-33-3)
* RHD

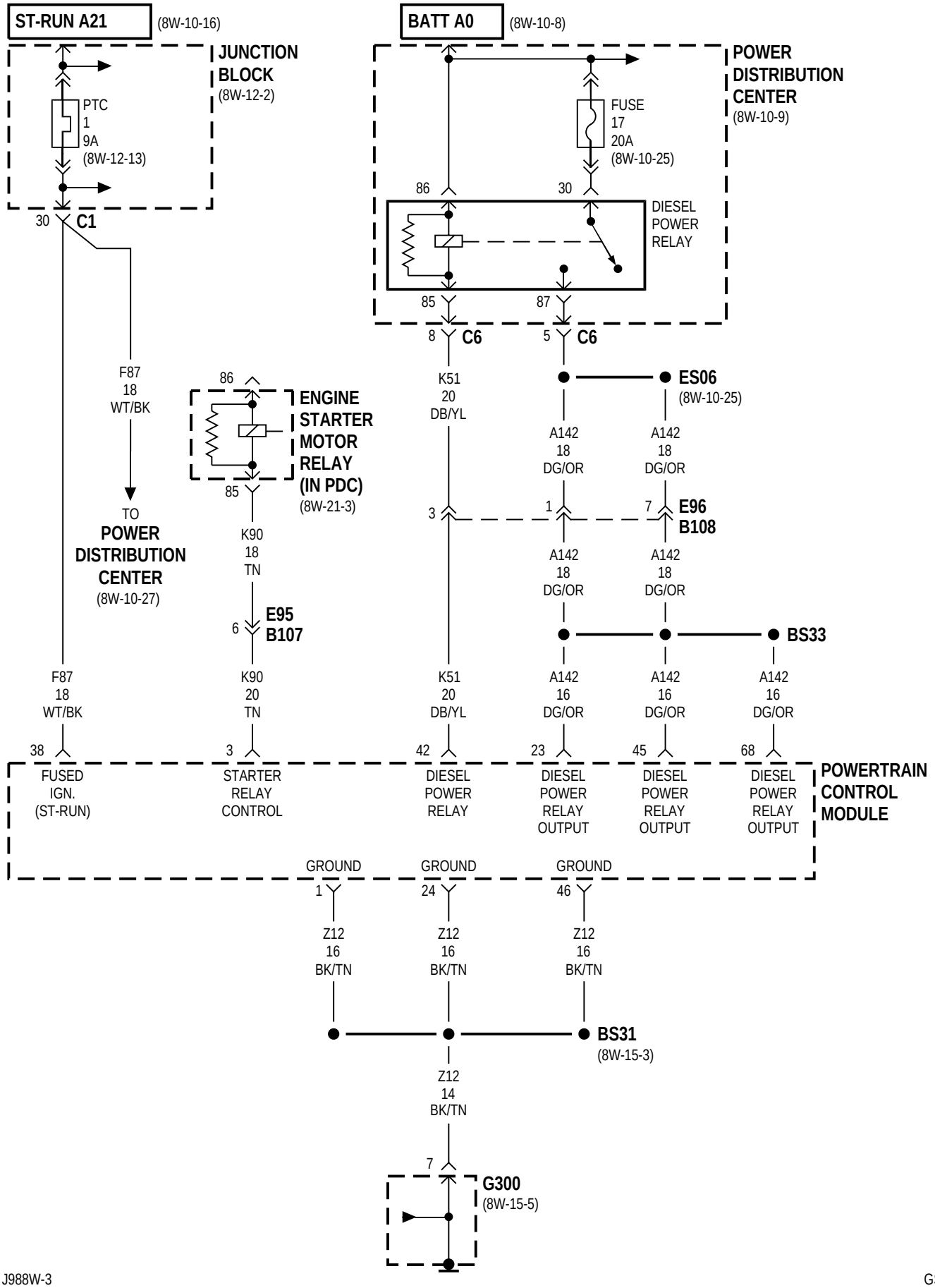
ST-RUN A21
(8W-10-16)
BATT A0
(8W-10-8)
JUNCTION BLOCK
(8W-12-2)
PTC
1
9A
(8W-12-13)
30
C1
POWER DISTRIBUTION CENTER
(8W-10-9)
FUSE
17
20A
(8W-10-25)
86
30
DIESEL POWER RELAY
85
87
8
C6
5
C6
F87
18
WT/BK
TO
POWER DISTRIBUTION CENTER
(8W-10-27)
86
ENGINE STARTER MOTOR RELAY (IN PDC)
(8W-21-3)
85
K90
18
TN
6
E95
B107
K51
20
DB/YL
ES06
(8W-10-25)
A142
18
DG/OR
A142
18
DG/OR
3
1
7
E96
B108
A142
18
DG/OR
A142
18
DG/OR
BS33
F87
18
WT/BK
K90
20
TN
K51
20
DB/YL
A142
16
DG/OR
A142
16
DG/OR
A142
16
DG/OR
38
3
42
23
45
68
FUSED IGN. (ST-RUN)
STARTER RELAY CONTROL
DIESEL POWER RELAY
DIESEL POWER RELAY OUTPUT
DIESEL POWER RELAY OUTPUT
DIESEL POWER RELAY OUTPUT
POWERTRAIN CONTROL MODULE
GROUND
GROUND
GROUND
1
24
46
Z12
16
BK/TN
Z12
16
BK/TN
Z12
16
BK/TN
BS31
(8W-15-3)
Z12
14
BK/TN
7
G300
(8W-15-5)

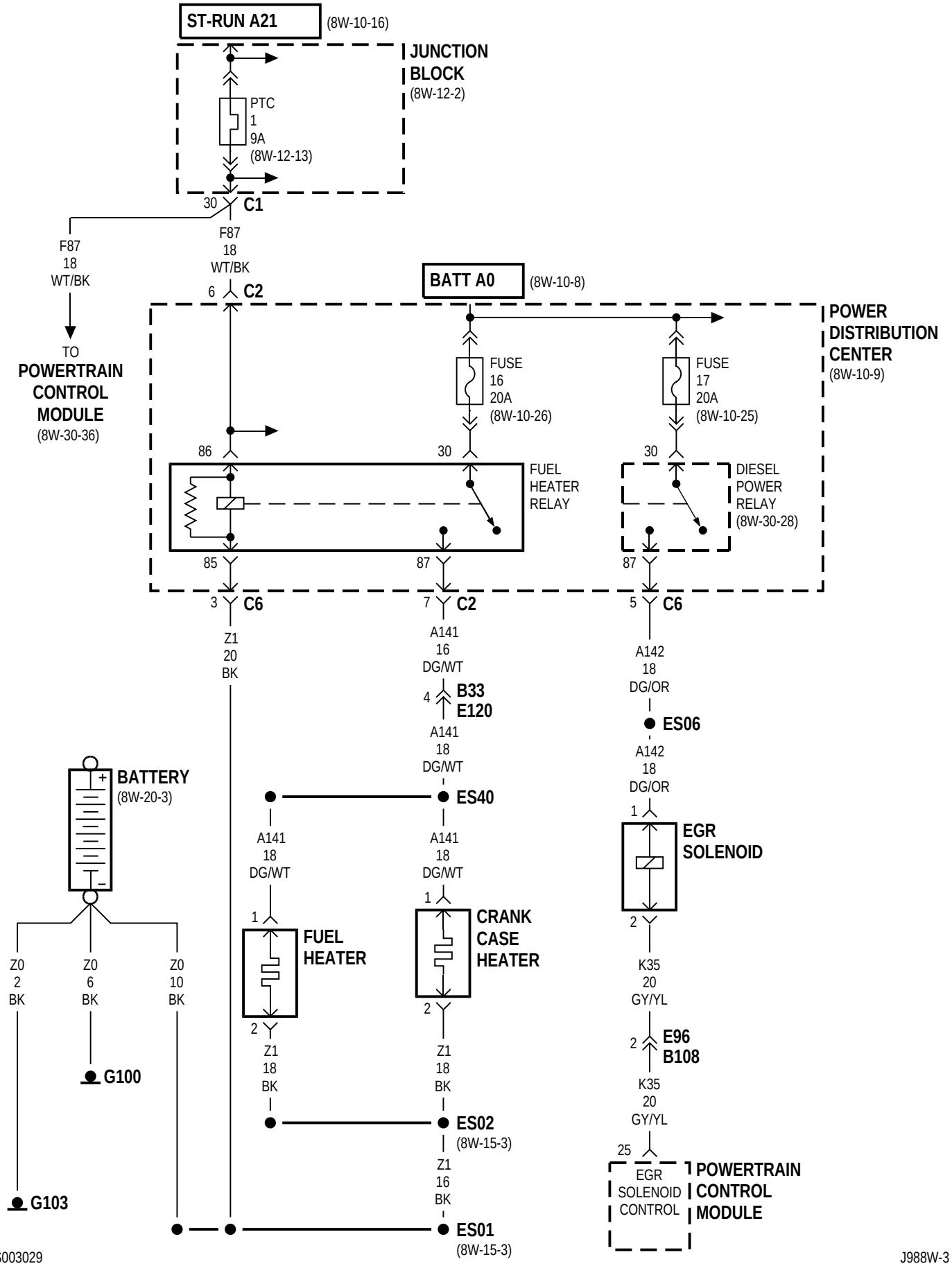

GS003029

J988W-3

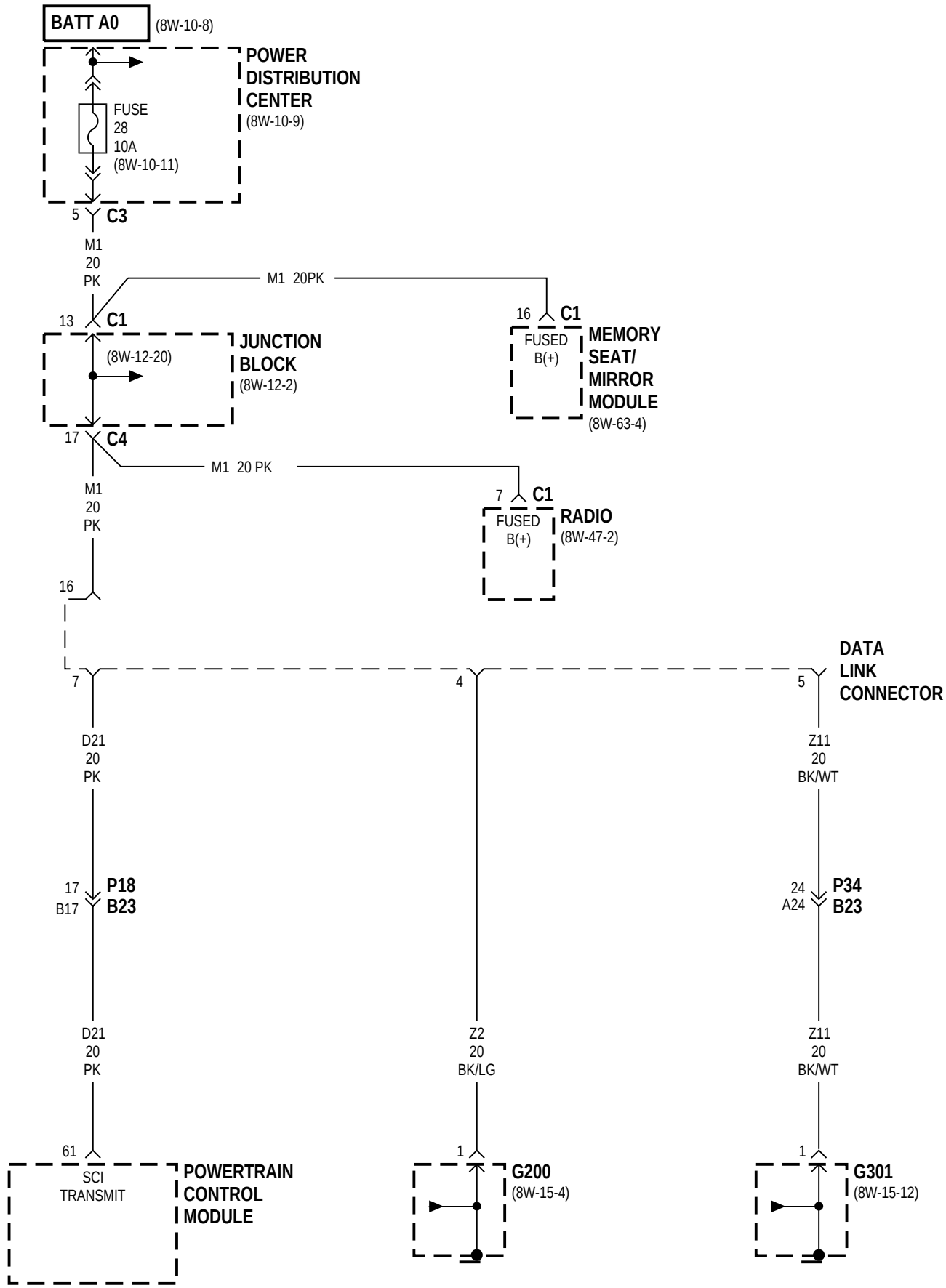
BATT A0
(8W-10-8)
POWER DISTRIBUTION CENTER
(8W-10-9)
FUSE 28 10A
(8W-10-11)
5 C3
M1 20 PK
M1 20PK
13 C1
(8W-12-20)
JUNCTION BLOCK
(8W-12-2)
16 C1
FUSED B(+)
MEMORY SEAT/ MIRROR MODULE
(8W-63-4)
17 C4
M1 20 PK
7 C1
FUSED B(+)
RADIO
(8W-47-2)
16
7
4
5
DATA LINK CONNECTOR
D21 20 PK
Z11 20 BK/WT
17 B17
P18 B23
24 A24
P34 B23
D21 20 PK
Z2 20 BK/LG
Z11 20 BK/WT
61
SCI TRANSMIT
POWERTRAIN CONTROL MODULE
1
G200
(8W-15-4)
1
G301
(8W-15-12)

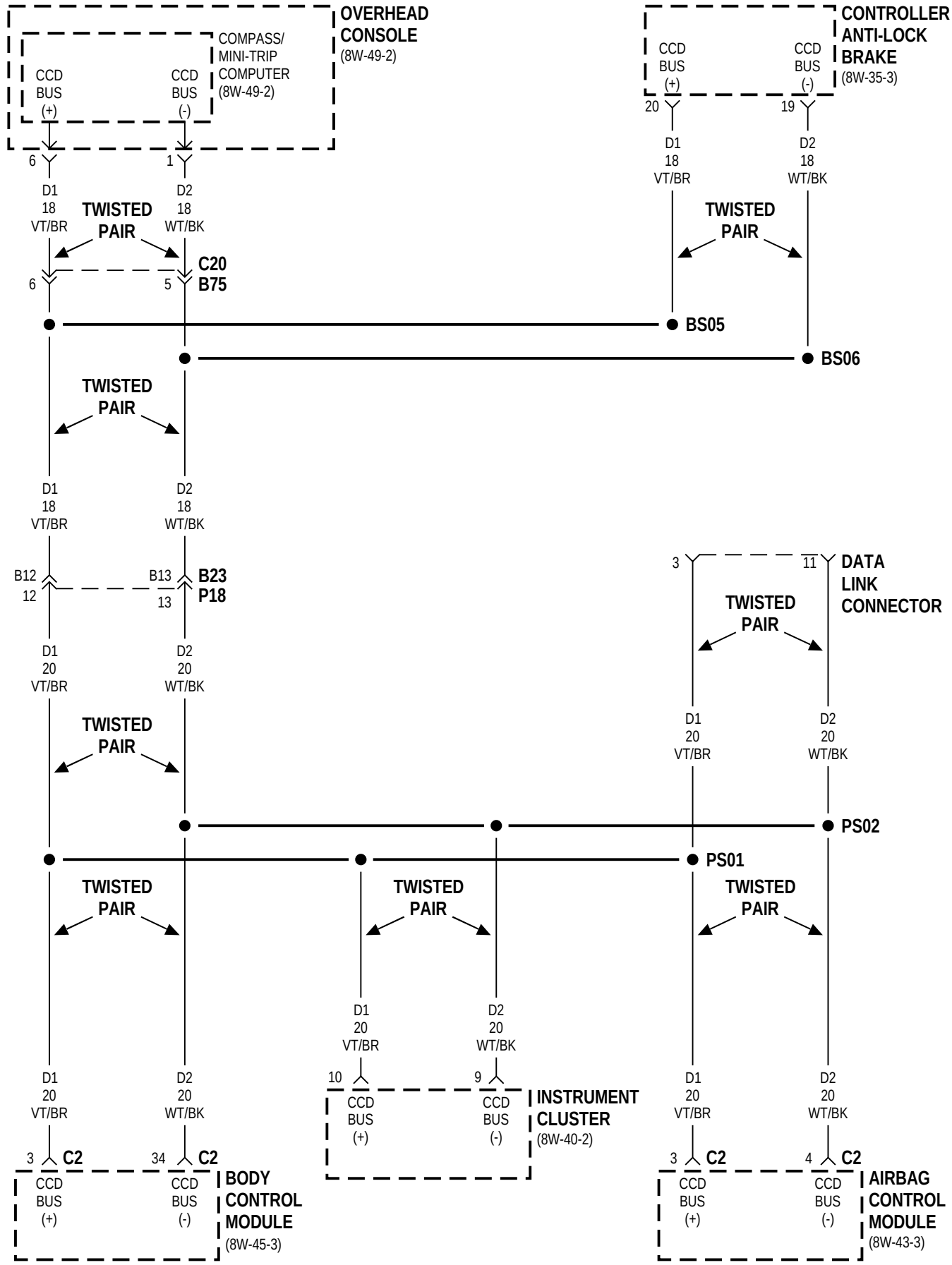
OVERHEAD CONSOLE
(8W-49-2)
COMPASS/ MINI-TRIP COMPUTER (8W-49-2)
CCD BUS (+)
CCD BUS (-)
6
1
D1 18 VT/BR
D2 18 WT/BK
TWISTED PAIR
C20
B75
6
5
CONTROLLER ANTI-LOCK BRAKE
(8W-35-3)
20
19
BS05
BS06
B12
12
B13
13
B23
P18
D1 20 VT/BR
D2 20 WT/BK
DATA LINK CONNECTOR
3
11
PS02
PS01
INSTRUMENT CLUSTER
(8W-40-2)
10
9
BODY CONTROL MODULE
(8W-45-3)
34
AIRBAG CONTROL MODULE
(8W-43-3)
4
C2

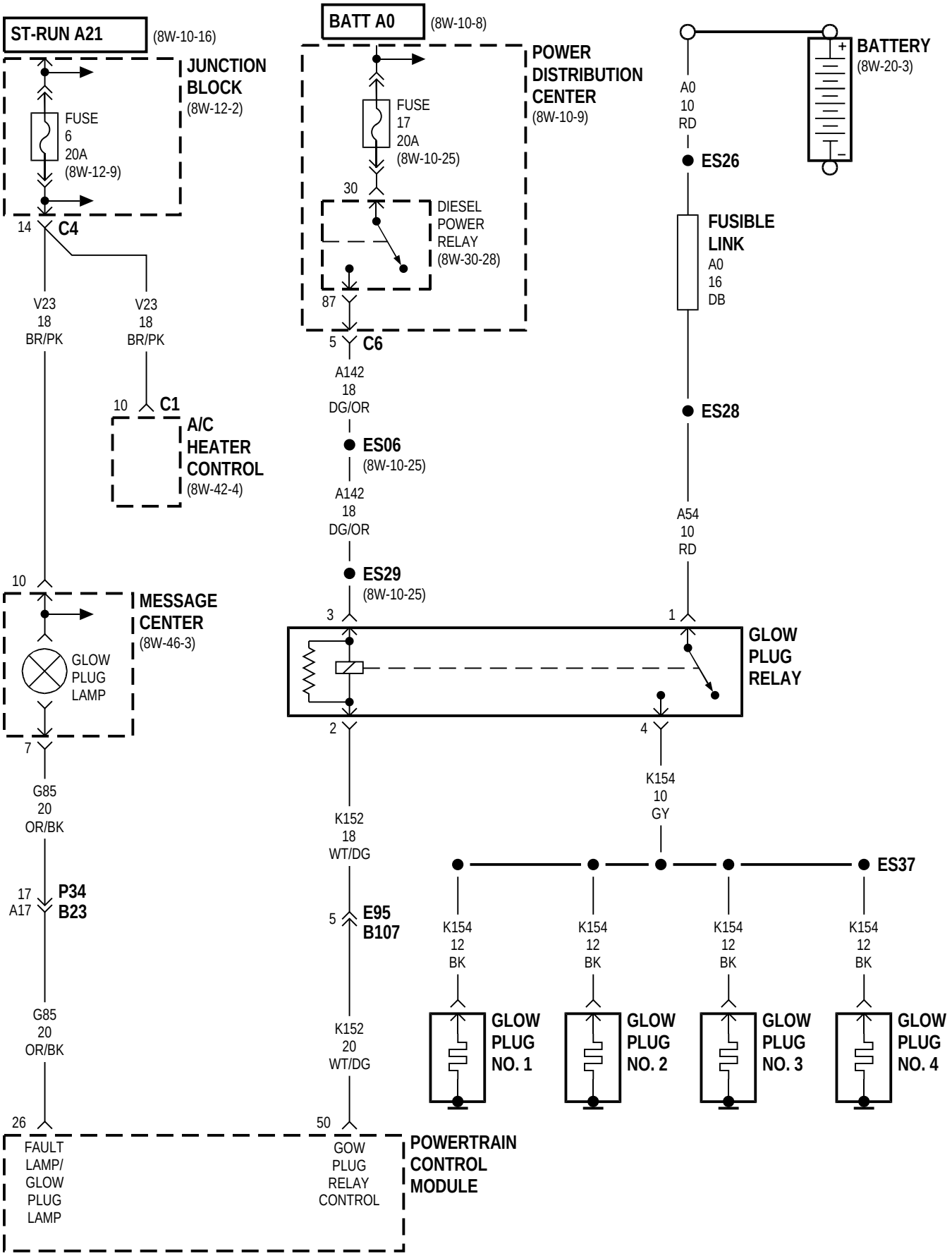
ST-RUN A21
(8W-10-16)
JUNCTION BLOCK
(8W-12-2)
FUSE 6 20A
(8W-12-9)
14
C4
V23 18 BR/PK
V23 18 BR/PK
10
C1
A/C HEATER CONTROL
(8W-42-4)
10
MESSAGE CENTER
(8W-46-3)
GLOW PLUG LAMP
7
G85 20 OR/BK
17
A17
P34
B23
G85 20 OR/BK
26
FAULT LAMP/ GLOW PLUG LAMP
BATT A0
(8W-10-8)
POWER DISTRIBUTION CENTER
(8W-10-9)
FUSE 17 20A
(8W-10-25)
30
DIESEL POWER RELAY
(8W-30-28)
87
5
C6
A142 18 DG/OR
ES06
(8W-10-25)
A142 18 DG/OR
ES29
(8W-10-25)
3
2
K152 18 WT/DG
5
E95
B107
K152 20 WT/DG
50
GOW PLUG RELAY CONTROL
POWERTRAIN CONTROL MODULE
A0 10 RD
ES26
FUSIBLE LINK
A0
16
DB
ES28
A54 10 RD
1
4
GLOW PLUG RELAY
K154 10 GY
ES37
K154 12 BK
K154 12 BK
K154 12 BK
K154 12 BK
GLOW PLUG NO. 1
GLOW PLUG NO. 2
GLOW PLUG NO. 3
GLOW PLUG NO. 4
BATTERY
(8W-20-3)
+
-

DIESEL

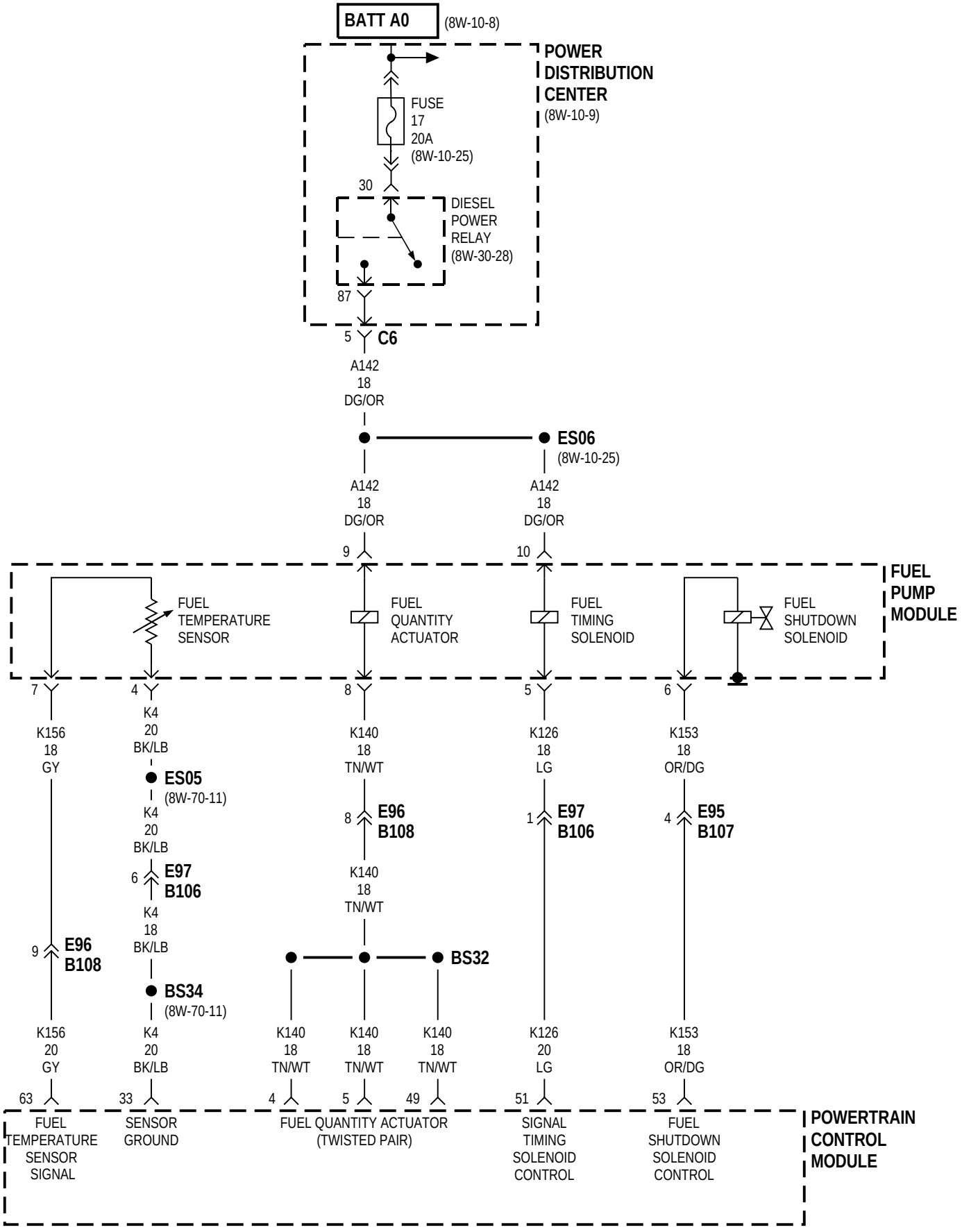
BATT A0
(8W-10-8)
POWER DISTRIBUTION CENTER
(8W-10-9)
FUSE 17 20A
(8W-10-25)
30
DIESEL POWER RELAY
(8W-30-28)
87
5
C6
A142 18 DG/OR
ES06
(8W-10-25)
A142 18 DG/OR
A142 18 DG/OR
9
10
FUEL PUMP MODULE
FUEL TEMPERATURE SENSOR
FUEL QUANTITY ACTUATOR
FUEL TIMING SOLENOID
FUEL SHUTDOWN SOLENOID
7
4
8
5
6
K156 18 GY
K4 20 BK/LB
K140 18 TN/WT
K126 18 LG
K153 18 OR/DG
ES05
(8W-70-11)
8
E96
B108
1
E97
B106
4
E95
B107
K4 20 BK/LB
6
E97
B106
K140 18 TN/WT
K4 18 BK/LB
9
E96
B108
BS32
BS34
(8W-70-11)
K156 20 GY
K4 20 BK/LB
K140 18 TN/WT
K140 18 TN/WT
K140 18 TN/WT
K126 20 LG
K153 18 OR/DG
63
33
4
5
49
51
53
FUEL TEMPERATURE SENSOR SIGNAL
SENSOR GROUND
FUEL QUANTITY ACTUATOR (TWISTED PAIR)
SIGNAL TIMING SOLENOID CONTROL
FUEL SHUTDOWN SOLENOID CONTROL
POWERTRAIN CONTROL MODULE

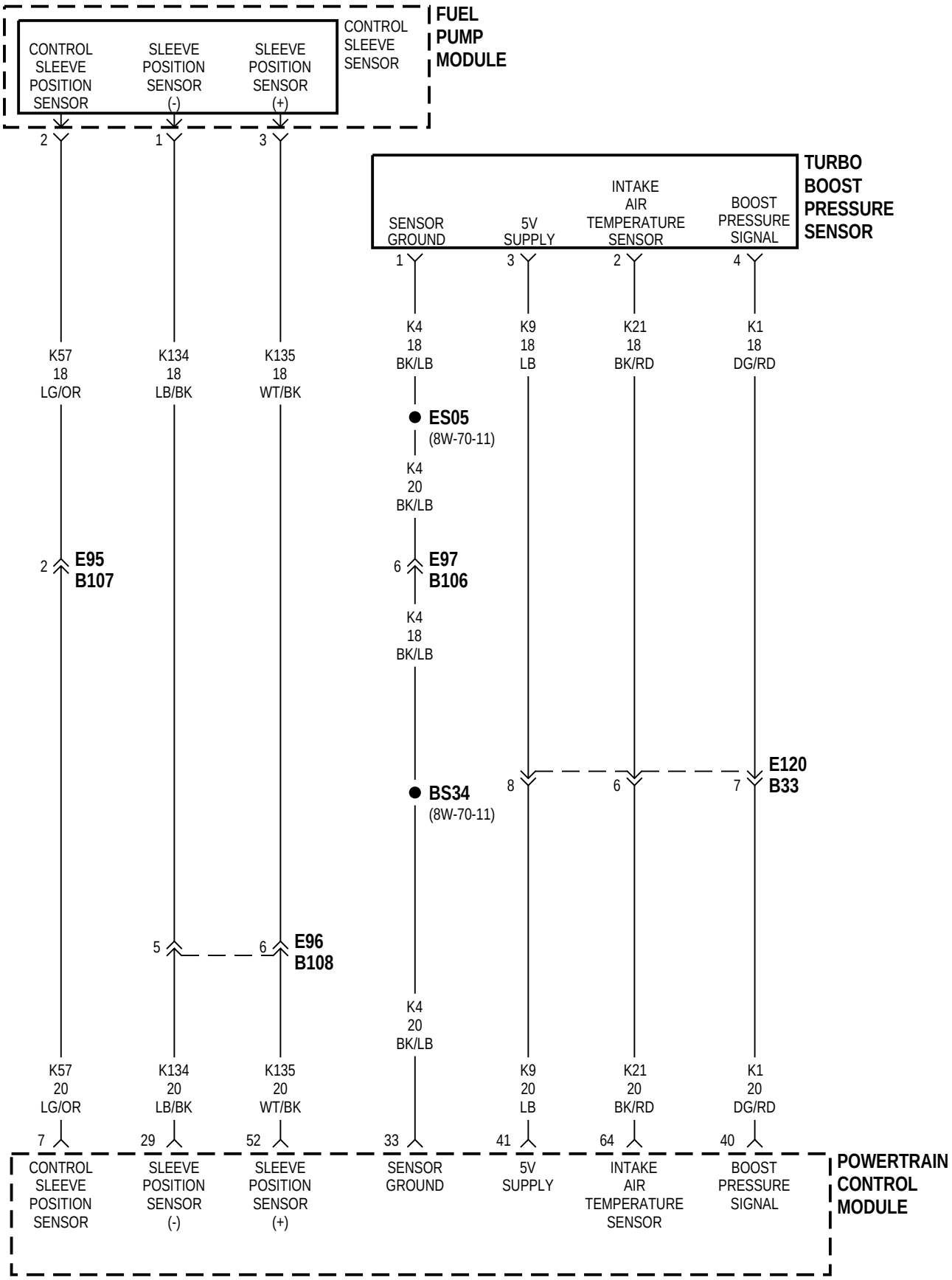
FUEL PUMP MODULE
CONTROL SLEEVE POSITION SENSOR
SLEEVE POSITION SENSOR (-)
SLEEVE POSITION SENSOR (+)
CONTROL SLEEVE SENSOR
2
1
3
TURBO BOOST PRESSURE SENSOR
SENSOR GROUND
5V SUPPLY
INTAKE AIR TEMPERATURE SENSOR
BOOST PRESSURE SIGNAL
1
3
2
4
K4 18 BK/LB
K9 18 LB
K21 18 BK/RD
K1 18 DG/RD
K57 18 LG/OR
K134 18 LB/BK
K135 18 WT/BK
ES05
(8W-70-11)
K4 20 BK/LB
2
E95
B107
6
E97
B106
K4 18 BK/LB
E120
B33
8
6
7
BS34
(8W-70-11)
5
6
E96
B108
K4 20 BK/LB
K57 20 LG/OR
K134 20 LB/BK
K135 20 WT/BK
K9 20 LB
K21 20 BK/RD
K1 20 DG/RD
7
29
52
33
41
64
40
CONTROL SLEEVE POSITION SENSOR
SLEEVE POSITION SENSOR (-)
SLEEVE POSITION SENSOR (+)
SENSOR GROUND
5V SUPPLY
INTAKE AIR TEMPERATURE SENSOR
BOOST PRESSURE SIGNAL
POWERTRAIN CONTROL MODULE

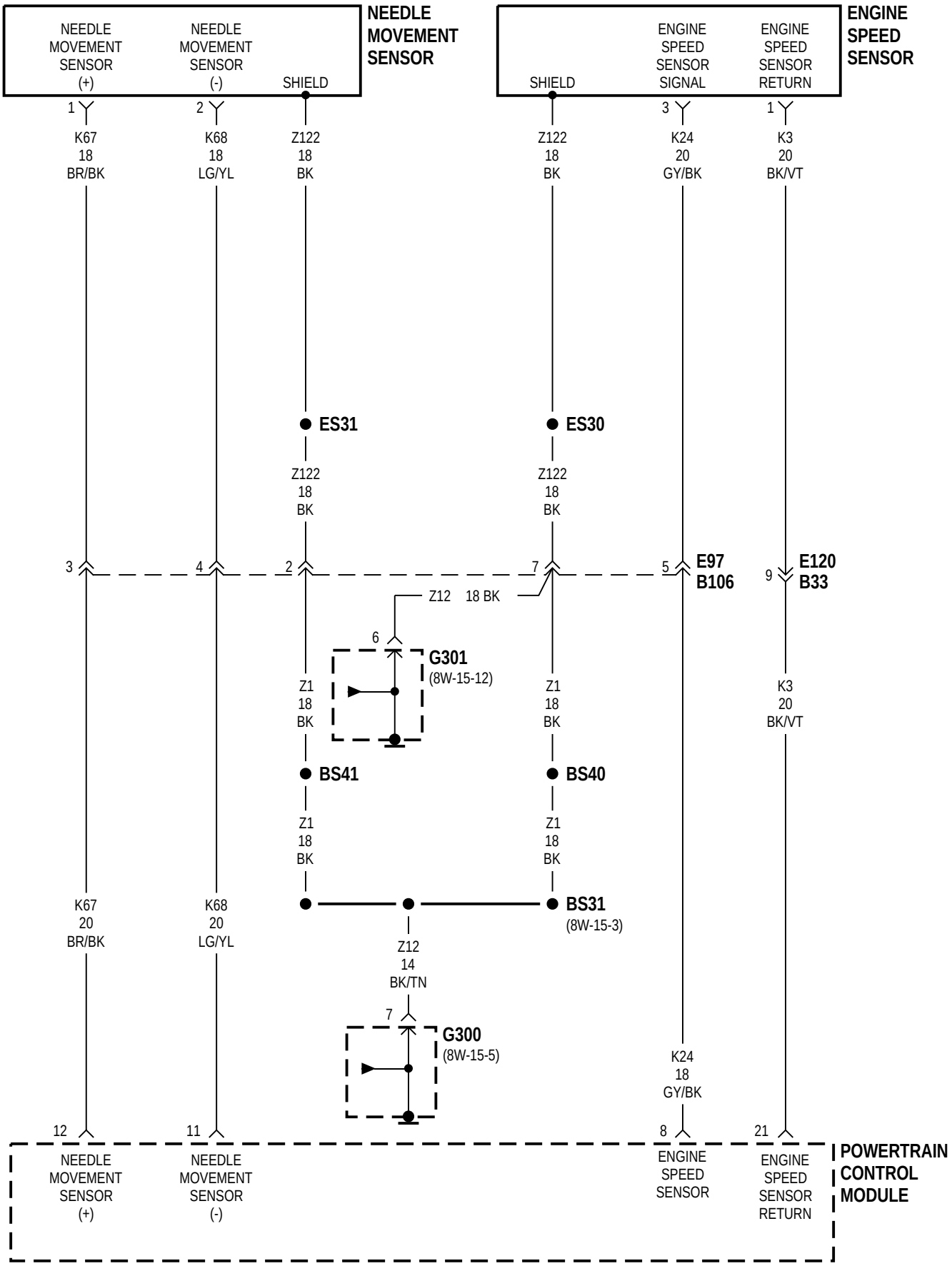
NEEDLE MOVEMENT SENSOR
NEEDLE MOVEMENT SENSOR (+)
NEEDLE MOVEMENT SENSOR (-)
SHIELD
ENGINE SPEED SENSOR
SHIELD
ENGINE SPEED SENSOR SIGNAL
ENGINE SPEED SENSOR RETURN
1
2
3
1
K67 18 BR/BK
K68 18 LG/YL
Z122 18 BK
Z122 18 BK
K24 20 GY/BK
K3 20 BK/VT
ES31
ES30
Z122 18 BK
Z122 18 BK
3
4
2
7
5
E97 B106
9
E120 B33
Z12 18 BK
6
G301 (8W-15-12)
Z1 18 BK
Z1 18 BK
K3 20 BK/VT
BS41
BS40
Z1 18 BK
Z1 18 BK
K67 20 BR/BK
K68 20 LG/YL
BS31 (8W-15-3)
Z12 14 BK/TN
7
G300 (8W-15-5)
K24 18 GY/BK
12
11
8
21
NEEDLE MOVEMENT SENSOR (+)
NEEDLE MOVEMENT SENSOR (-)
ENGINE SPEED SENSOR
ENGINE SPEED SENSOR RETURN
POWERTRAIN CONTROL MODULE

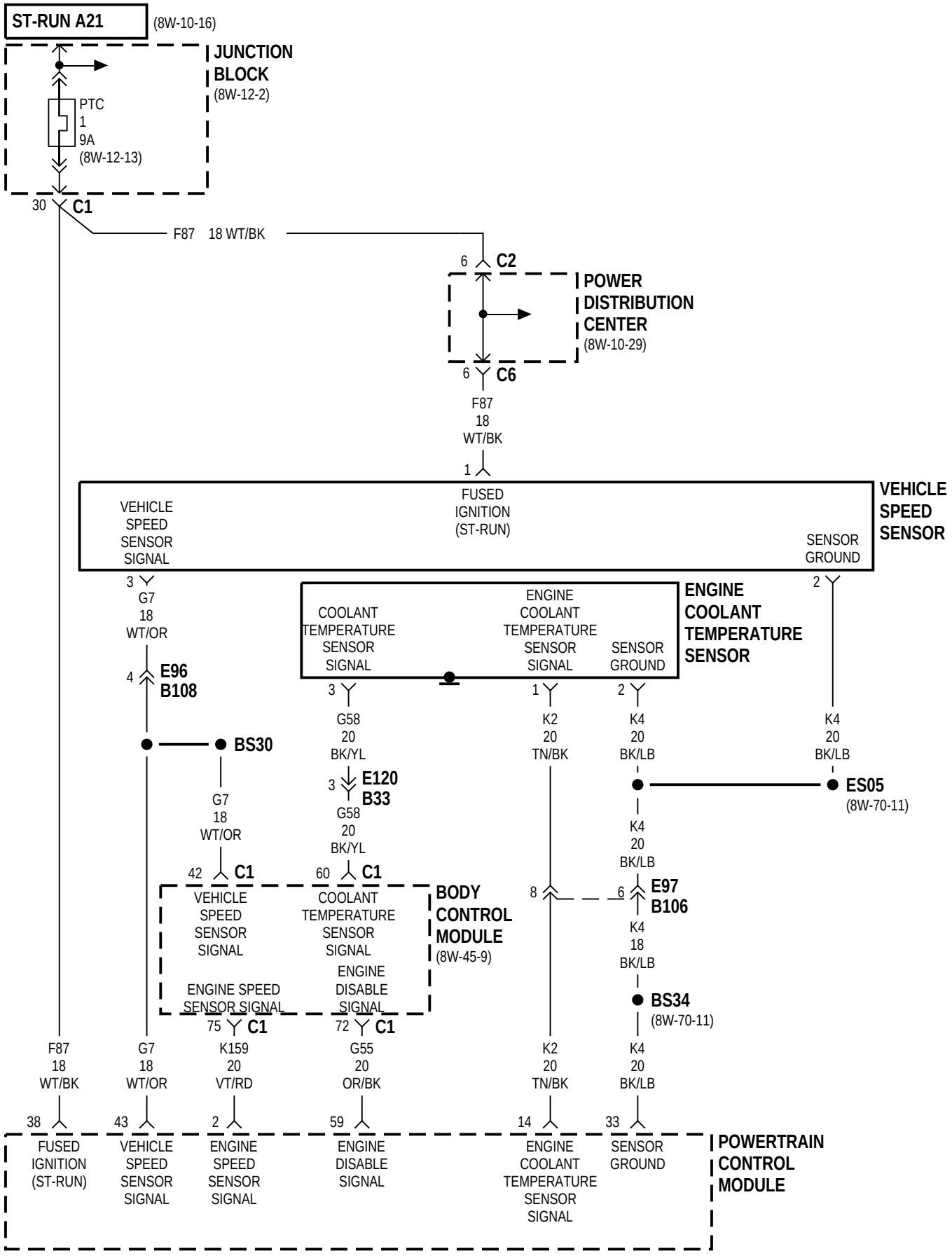
ST-RUN A21
(8W-10-16)
JUNCTION BLOCK
(8W-12-2)
PTC
1
9A
(8W-12-13)
30 C1
F87 18 WT/BK
6 C2
POWER DISTRIBUTION CENTER
(8W-10-29)
6 C6
F87
18
WT/BK
1
FUSED IGNITION (ST-RUN)
VEHICLE SPEED SENSOR
VEHICLE SPEED SENSOR SIGNAL
SENSOR GROUND
3 G7 18 WT/OR
4 E96 B108
BS30
G7 18 WT/OR
42 C1
VEHICLE SPEED SENSOR SIGNAL
ENGINE SPEED SENSOR SIGNAL
75 C1
ENGINE COOLANT TEMPERATURE SENSOR
COOLANT TEMPERATURE SENSOR SIGNAL
ENGINE COOLANT TEMPERATURE SENSOR SIGNAL
SENSOR GROUND
3 G58 20 BK/YL
3 E120 B33
G58 20 BK/YL
60 C1
ENGINE DISABLE SIGNAL
72 C1
1 K2 20 TN/BK
2 K4 20 BK/LB
K4 20 BK/LB
ES05
(8W-70-11)
BODY CONTROL MODULE
(8W-45-9)
8 6 E97 B106
K4 18 BK/LB
BS34
(8W-70-11)
F87 18 WT/BK
G7 18 WT/OR
K159 20 VT/RD
G55 20 OR/BK
K2 20 TN/BK
K4 20 BK/LB
38 FUSED IGNITION (ST-RUN)
43 VEHICLE SPEED SENSOR SIGNAL
2 ENGINE SPEED SENSOR SIGNAL
59 ENGINE DISABLE SIGNAL
14 ENGINE COOLANT TEMPERATURE SENSOR SIGNAL
33 SENSOR GROUND
POWERTRAIN CONTROL MODULE

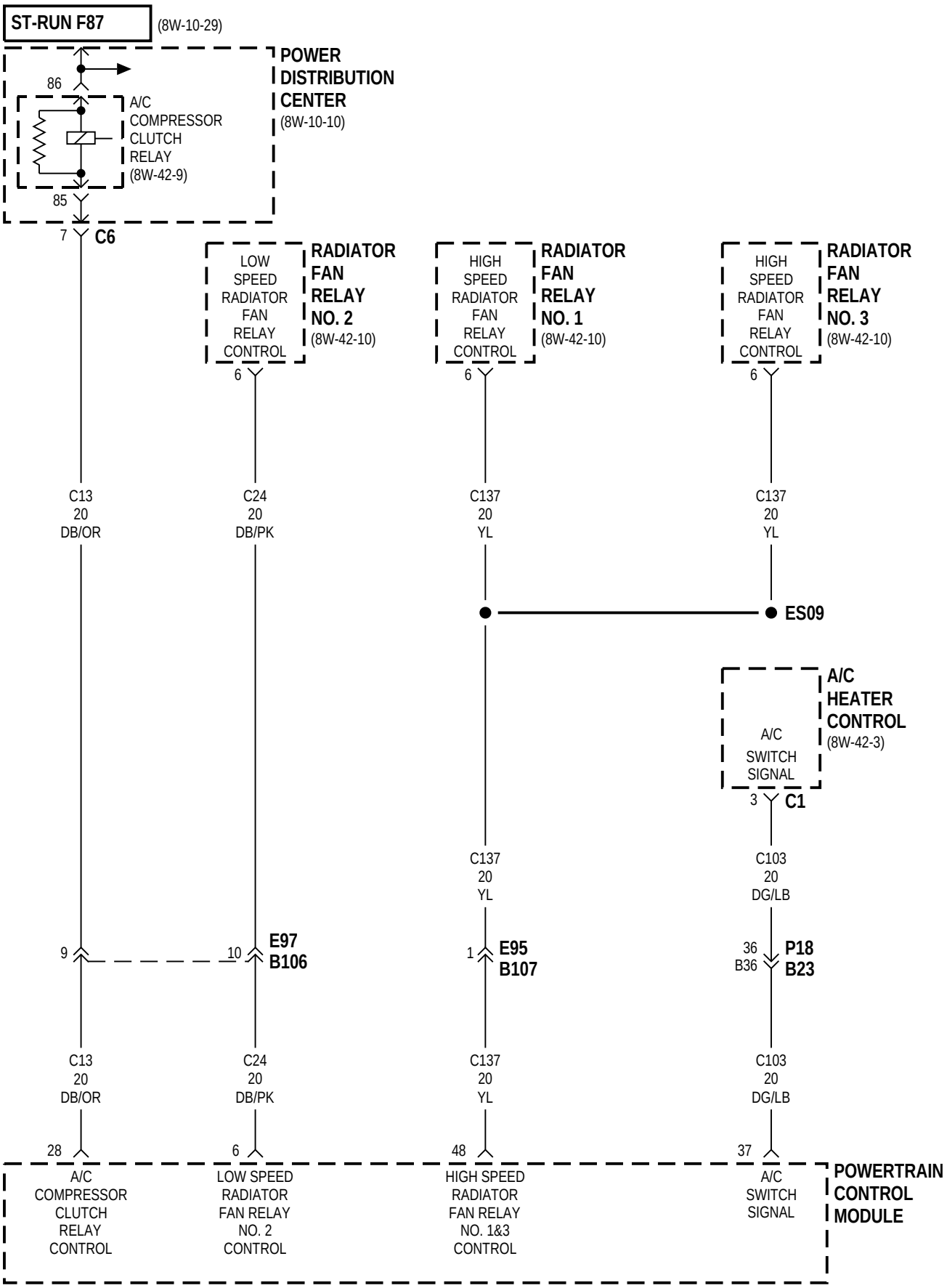
ST-RUN F87
(8W-10-29)
POWER DISTRIBUTION CENTER
(8W-10-10)
86
A/C COMPRESSOR CLUTCH RELAY
(8W-42-9)
85
7
C6
LOW SPEED RADIATOR FAN RELAY CONTROL
RADIATOR FAN RELAY NO. 2
(8W-42-10)
HIGH SPEED RADIATOR FAN RELAY CONTROL
RADIATOR FAN RELAY NO. 1
(8W-42-10)
HIGH SPEED RADIATOR FAN RELAY CONTROL
RADIATOR FAN RELAY NO. 3
(8W-42-10)
6
C13 20 DB/OR
C24 20 DB/PK
C137 20 YL
C137 20 YL
ES09
A/C SWITCH SIGNAL
A/C HEATER CONTROL
(8W-42-3)
3
C1
C137 20 YL
C103 20 DG/LB
9
10
E97
B106
1
E95
B107
36
B36
P18
B23
C13 20 DB/OR
C24 20 DB/PK
C137 20 YL
C103 20 DG/LB
28
6
48
37
A/C COMPRESSOR CLUTCH RELAY CONTROL
LOW SPEED RADIATOR FAN RELAY NO. 2 CONTROL
HIGH SPEED RADIATOR FAN RELAY NO. 1&3 CONTROL
A/C SWITCH SIGNAL
POWERTRAIN CONTROL MODULE

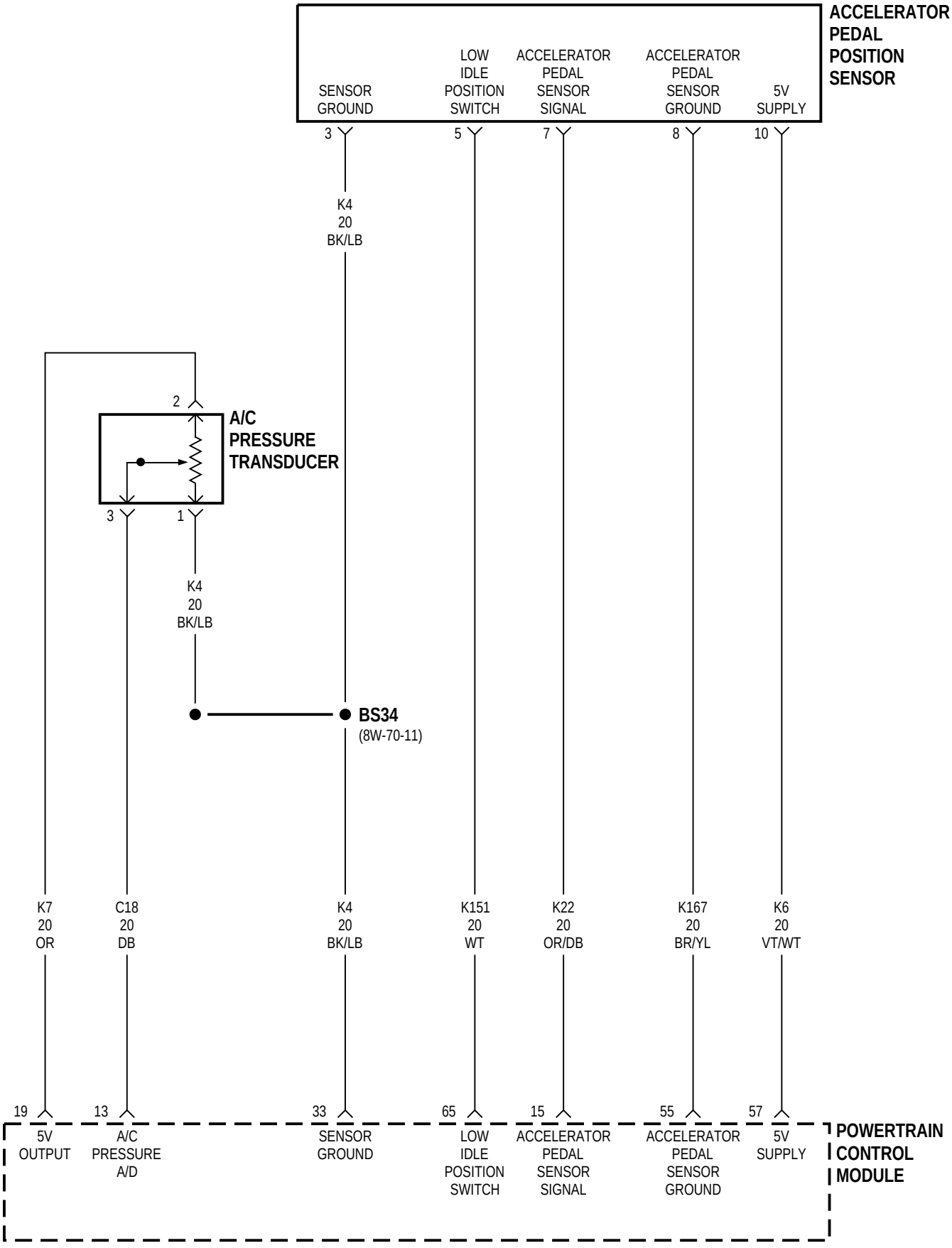
ACCELERATOR PEDAL POSITION SENSOR
SENSOR GROUND
LOW IDLE POSITION SWITCH
ACCELERATOR PEDAL SENSOR SIGNAL
ACCELERATOR PEDAL SENSOR GROUND
5V SUPPLY
3
5
7
8
10
K4 20 BK/LB
2
A/C PRESSURE TRANSDUCER
3
1
K4 20 BK/LB
BS34
(8W-70-11)
K7 20 OR
C18 20 DB
K4 20 BK/LB
K151 20 WT
K22 20 OR/DB
K167 20 BR/YL
K6 20 VT/WT
19
13
33
65
15
55
57
5V OUTPUT
A/C PRESSURE A/D
SENSOR GROUND
LOW IDLE POSITION SWITCH
ACCELERATOR PEDAL SENSOR SIGNAL
ACCELERATOR PEDAL SENSOR GROUND
5V SUPPLY
POWERTRAIN CONTROL MODULE

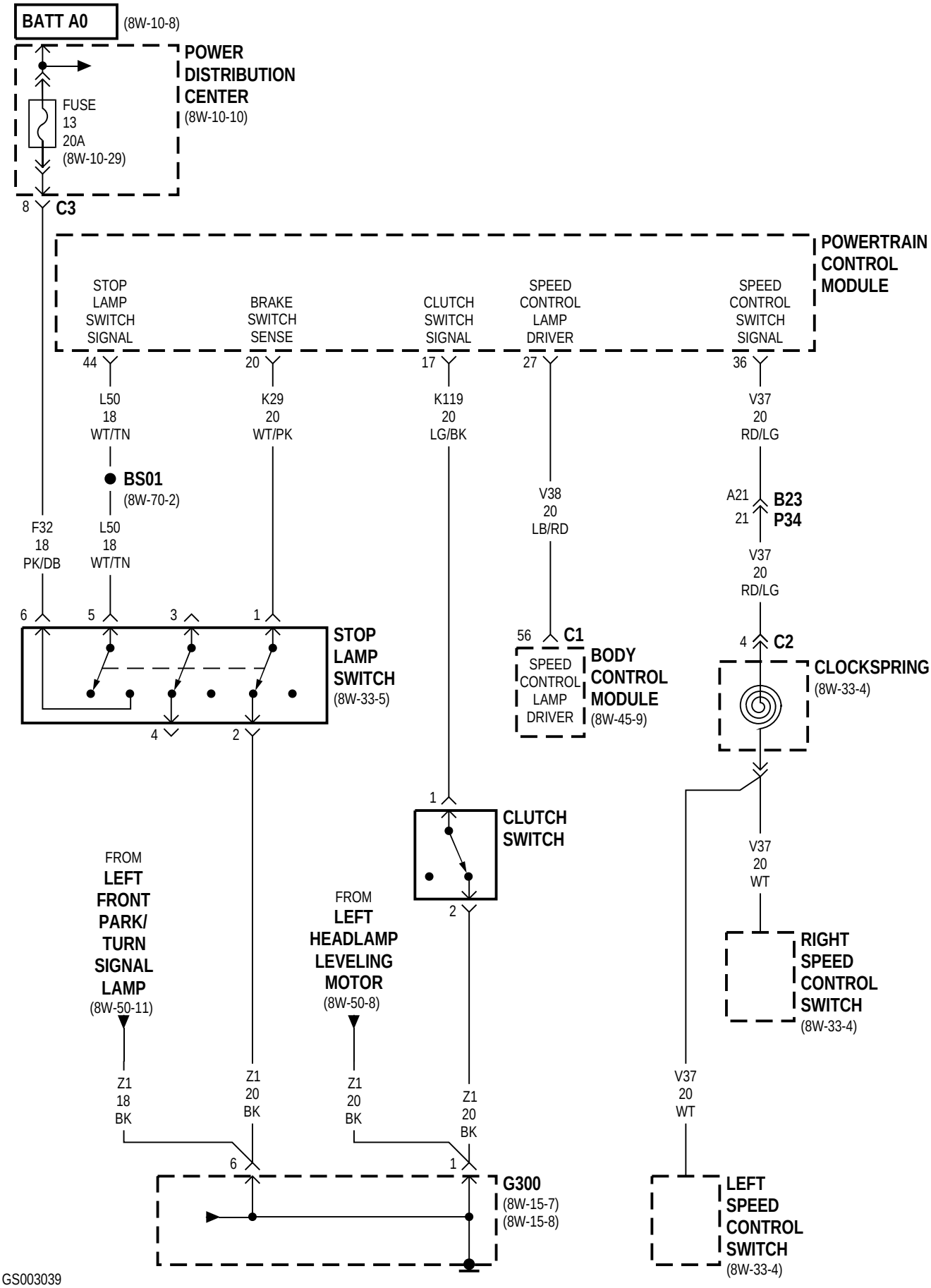
BATT A0
(8W-10-8)
POWER DISTRIBUTION CENTER
(8W-10-10)
FUSE 13 20A
(8W-10-29)
8
C3
POWERTRAIN CONTROL MODULE
STOP LAMP SWITCH SIGNAL
BRAKE SWITCH SENSE
CLUTCH SWITCH SIGNAL
SPEED CONTROL LAMP DRIVER
SPEED CONTROL SWITCH SIGNAL
44
20
17
27
36
L50 18 WT/TN
K29 20 WT/PK
K119 20 LG/BK
V38 20 LB/RD
V37 20 RD/LG
BS01
(8W-70-2)
A21
21
B23
P34
V37 20 RD/LG
F32 18 PK/DB
L50 18 WT/TN
6
5
3
1
STOP LAMP SWITCH
(8W-33-5)
4
2
56
C1
BODY CONTROL MODULE
(8W-45-9)
SPEED CONTROL LAMP DRIVER
4
C2
CLOCKSPRING
(8W-33-4)
1
CLUTCH SWITCH
2
V37 20 WT
FROM LEFT FRONT PARK/ TURN SIGNAL LAMP
(8W-50-11)
FROM LEFT HEADLAMP LEVELING MOTOR
(8W-50-8)
RIGHT SPEED CONTROL SWITCH
(8W-33-4)
Z1 18 BK
Z1 20 BK
Z1 20 BK
Z1 20 BK
V37 20 WT
6
1
G300
(8W-15-7)
(8W-15-8)
LEFT SPEED CONTROL SWITCH
(8W-33-4)

8W-31 TRANSMISSION CONTROL SYSTEM

Component	Page
All Wheel Drive Solenoid	8W-31-3
AW4 B13	8W-31-3
AWS1	8W-31-3
AWS2	8W-31-3
Battery	8W-31-2
BS02	8W-31-3
BS05	8W-31-8
BS06	8W-31-8
Clutch Interlock Switch Jumper	8W-31-5
Controller Anti-Lock Brake	8W-31-3
Crankshaft Position Sensor	8W-31-4
Data Link Connector	8W-31-8
ES01	8W-31-2, 6, 7
ES02	8W-31-4
ES05	8W-31-4
ES08	8W-31-4
ES10	8W-31-3, 5
ES11	8W-31-2
ES13	8W-31-8
ES14	8W-31-8
ES21	8W-31-4
ES24	8W-31-8
Fuse 2 (JB)	8W-31-5
Fuse 10 (JB)	8W-31-5
Fuse 12 (JB)	8W-31-3
Fuse 15 (PDC)	8W-31-2, 6, 7
G100	8W-31-2
G103	8W-31-2
G302	8W-31-3
Junction Block	8W-31-3, 5
Low/Reverse Pressure Switch	8W-31-6
Low/Reverse Solenoid	8W-31-7
Output Shaft Speed Sensor	8W-31-3
Overdrive Pressure Switch	8W-31-6
Overdrive Solenoid	8W-31-7
Power Distribution Center	8W-31-2, 5, 6, 7
Powertrain Control Module	8W-31-4, 5, 6
PS01	8W-31-8
PS02	8W-31-8
Throttle Position Sensor	8W-31-4
Transmission Control Module	8W-31-2, 3, 4, 5, 6, 7, 8
Transmission Control Relay	8W-31-2, 6, 7
Transmission Control Solenoids	8W-31-6, 7
Transmission Range Sensor	8W-31-3, 5
Turbine Speed Sensor	8W-31-3
Underdrive Solenoid	8W-31-7

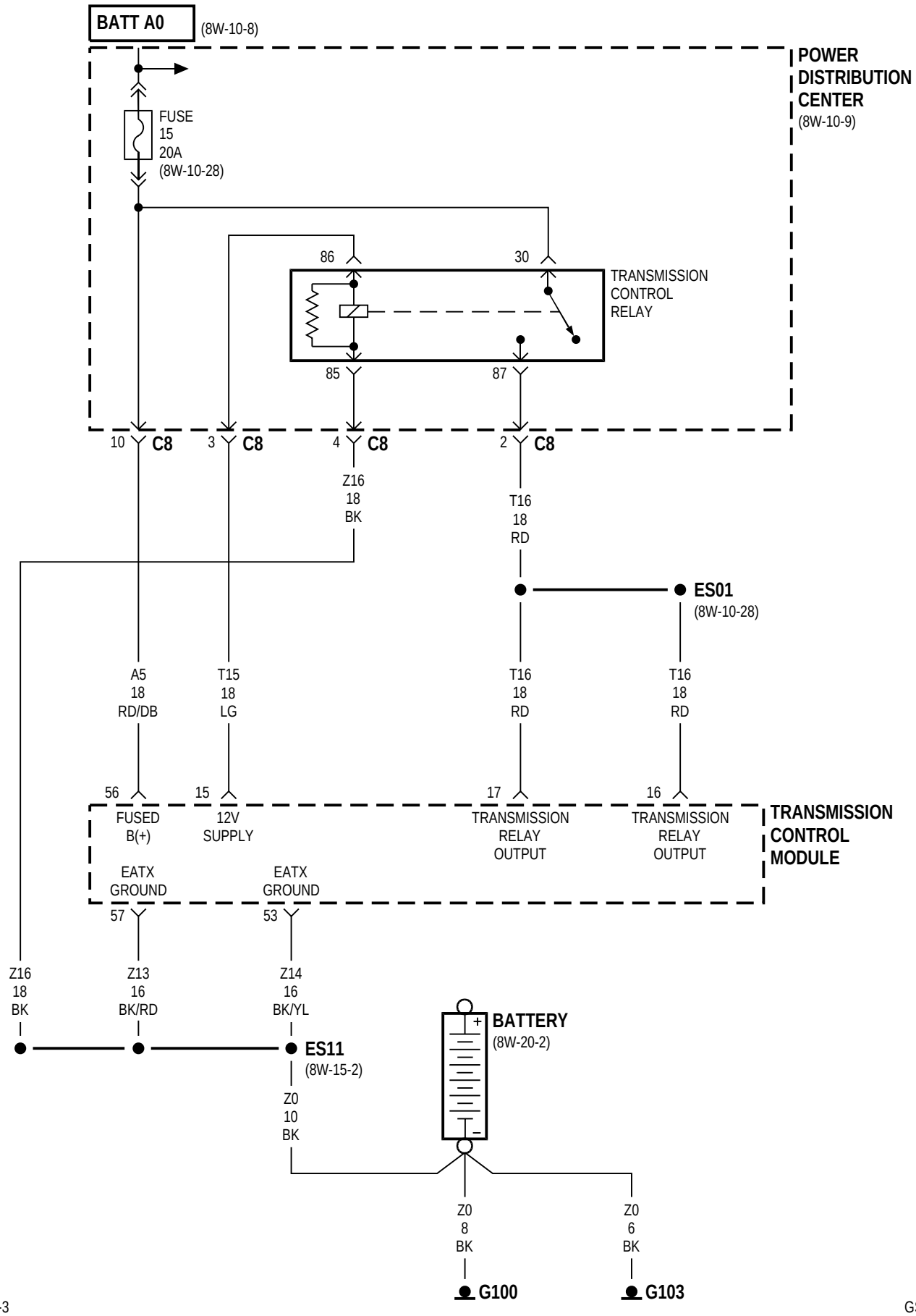
BATT A0
(8W-10-8)
POWER DISTRIBUTION CENTER
(8W-10-9)
FUSE 15 20A
(8W-10-28)
86
30
TRANSMISSION CONTROL RELAY
85
87
10 C8
3 C8
4 C8
2 C8
Z16 18 BK
T16 18 RD
ES01
(8W-10-28)
A5 18 RD/DB
T15 18 LG
T16 18 RD
T16 18 RD
56
15
17
16
FUSED B(+)
12V SUPPLY
TRANSMISSION RELAY OUTPUT
TRANSMISSION RELAY OUTPUT
TRANSMISSION CONTROL MODULE
EATX GROUND
57
EATX GROUND
53
Z16 18 BK
Z13 16 BK/RD
Z14 16 BK/YL
ES11
(8W-15-2)
BATTERY
(8W-20-2)
Z0 10 BK
Z0 8 BK
Z0 6 BK
G100
G103

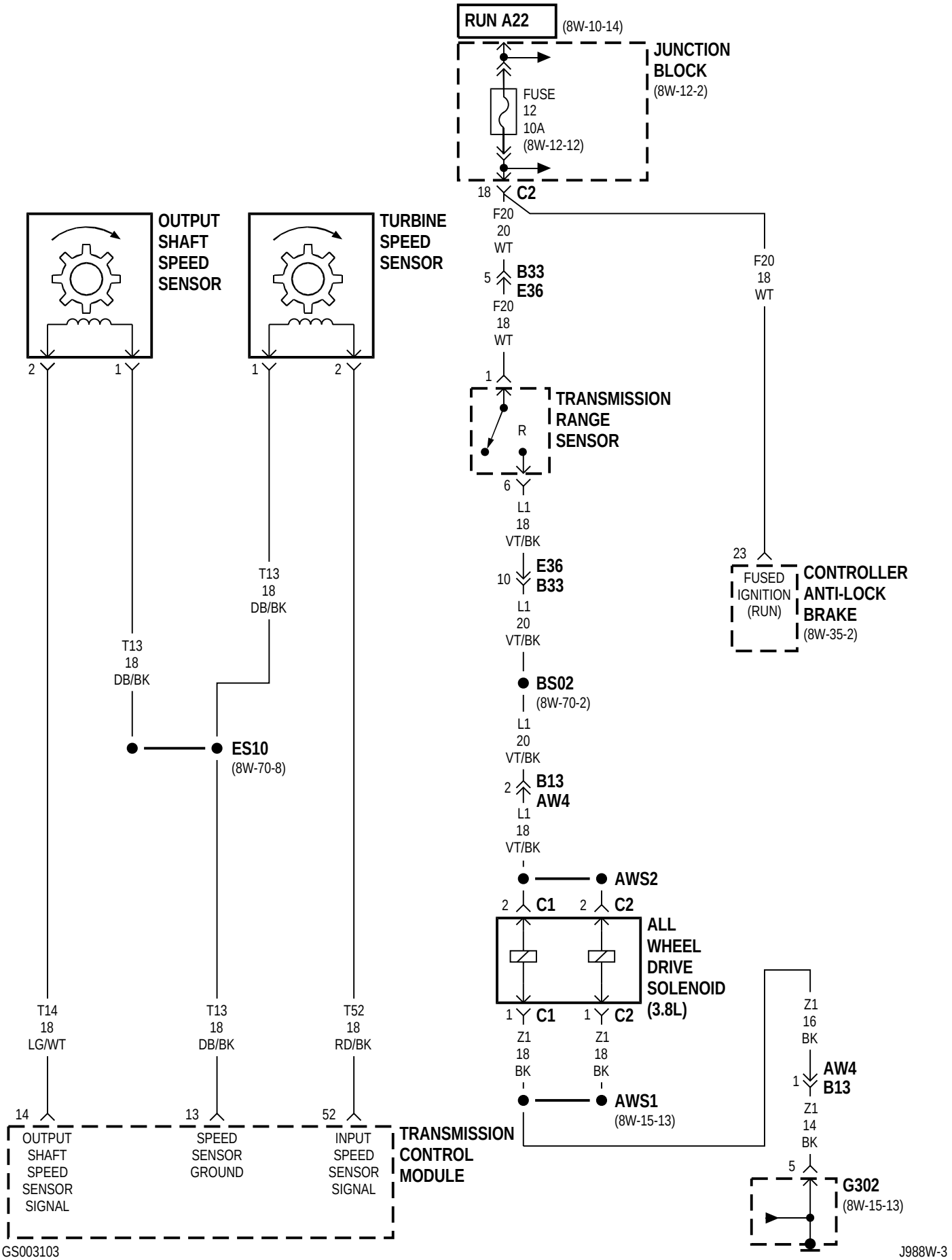

GS003103

J988W-3

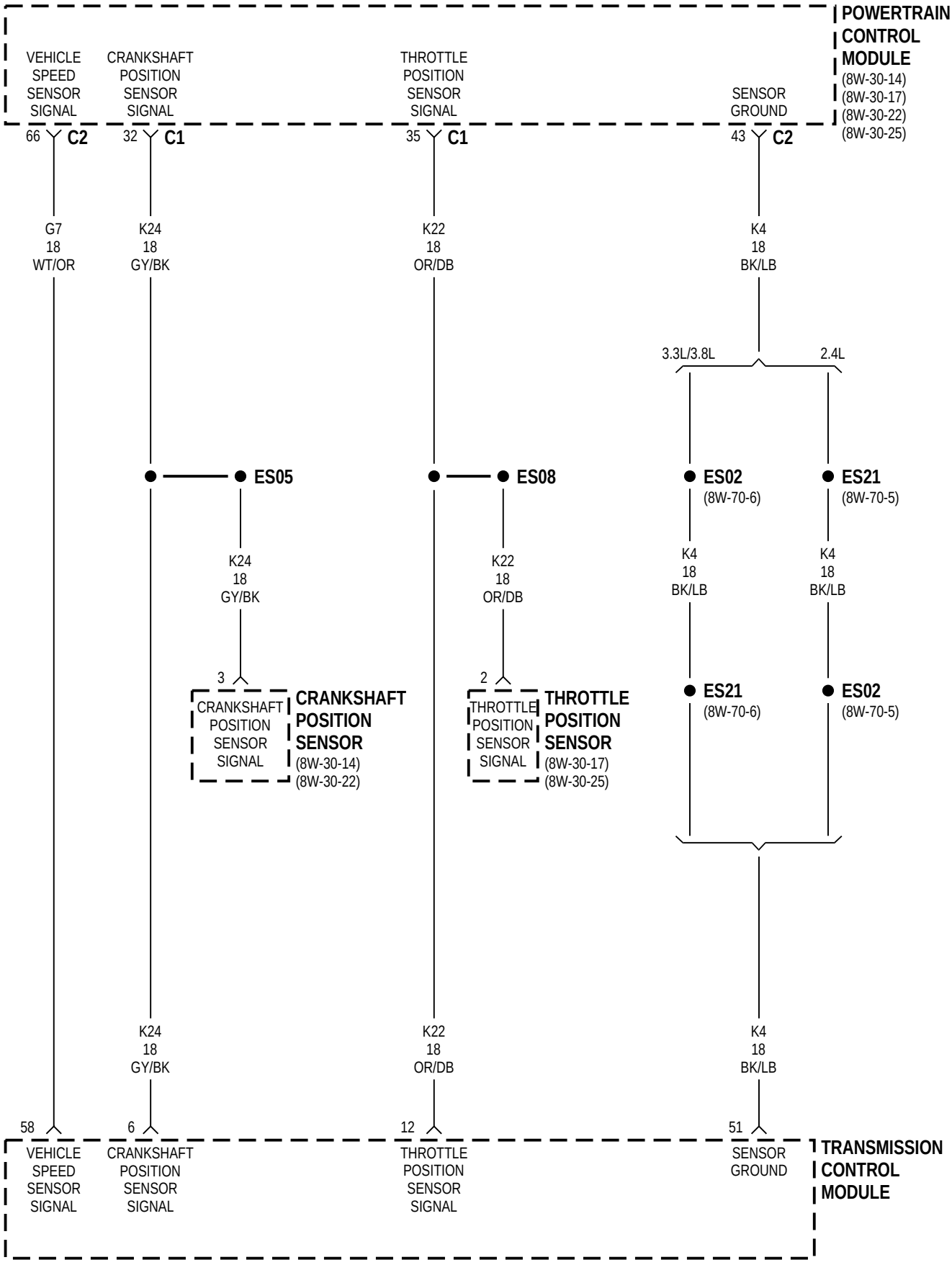
POWERTRAIN CONTROL MODULE
(8W-30-14)
(8W-30-17)
(8W-30-22)
(8W-30-25)
VEHICLE SPEED SENSOR SIGNAL
CRANKSHAFT POSITION SENSOR SIGNAL
THROTTLE POSITION SENSOR SIGNAL
SENSOR GROUND
66 C2
32 C1
35 C1
43 C2
G7 18 WT/OR
K24 18 GY/BK
K22 18 OR/DB
K4 18 BK/LB
3.3L/3.8L
2.4L
ES05
ES08
ES02 (8W-70-6)
ES21 (8W-70-5)
K24 18 GY/BK
K22 18 OR/DB
K4 18 BK/LB
K4 18 BK/LB
3
2
CRANKSHAFT POSITION SENSOR SIGNAL
CRANKSHAFT POSITION SENSOR
(8W-30-14)
(8W-30-22)
THROTTLE POSITION SENSOR SIGNAL
THROTTLE POSITION SENSOR
(8W-30-17)
(8W-30-25)
ES21 (8W-70-6)
ES02 (8W-70-5)
K24 18 GY/BK
K22 18 OR/DB
K4 18 BK/LB
58
6
12
51
VEHICLE SPEED SENSOR SIGNAL
CRANKSHAFT POSITION SENSOR SIGNAL
THROTTLE POSITION SENSOR SIGNAL
SENSOR GROUND
TRANSMISSION CONTROL MODULE

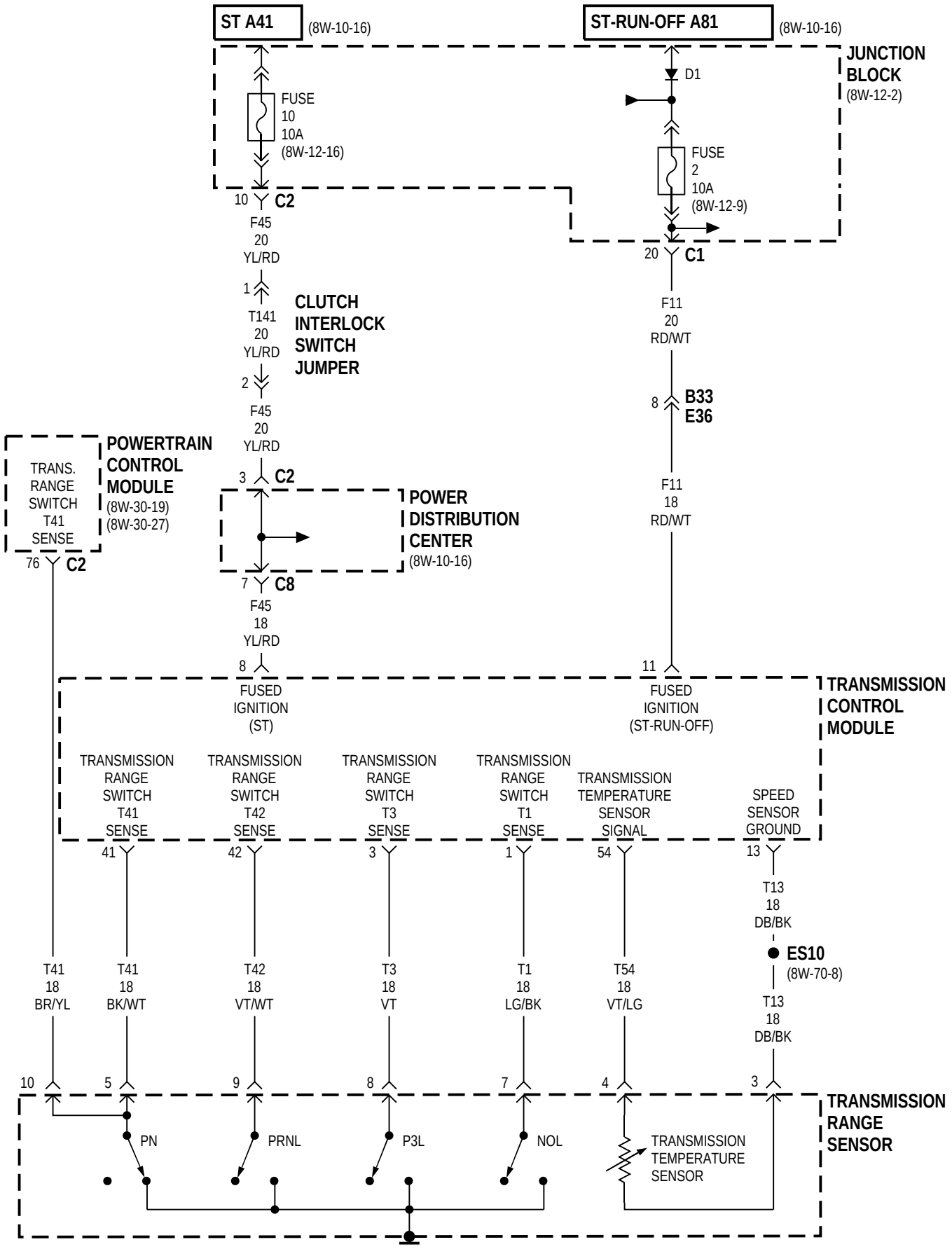
ST A41
(8W-10-16)
ST-RUN-OFF A81
(8W-10-16)
JUNCTION BLOCK
(8W-12-2)
D1
FUSE 10 10A (8W-12-16)
FUSE 2 10A (8W-12-9)
10 C2
F45 20 YL/RD
20 C1
F11 20 RD/WT
1
T141 20 YL/RD
2
CLUTCH INTERLOCK SWITCH JUMPER
8 B33 E36
F45 20 YL/RD
3 C2
POWERTRAIN CONTROL MODULE
(8W-30-19)
(8W-30-27)
TRANS. RANGE SWITCH T41 SENSE
76 C2
POWER DISTRIBUTION CENTER
(8W-10-16)
7 C8
F45 18 YL/RD
F11 18 RD/WT
8
11
FUSED IGNITION (ST)
FUSED IGNITION (ST-RUN-OFF)
TRANSMISSION CONTROL MODULE
TRANSMISSION RANGE SWITCH T41 SENSE
TRANSMISSION RANGE SWITCH T42 SENSE
TRANSMISSION RANGE SWITCH T3 SENSE
TRANSMISSION RANGE SWITCH T1 SENSE
TRANSMISSION TEMPERATURE SENSOR SIGNAL
SPEED SENSOR GROUND
41
42
3
1
54
13
T13 18 DB/BK
ES10
(8W-70-8)
T13 18 DB/BK
T41 18 BR/YL
T41 18 BK/WT
T42 18 VT/WT
T3 18 VT
T1 18 LG/BK
T54 18 VT/LG
10
5
9
8
7
4
3
PN
PRNL
P3L
NOL
TRANSMISSION TEMPERATURE SENSOR
TRANSMISSION RANGE SENSOR

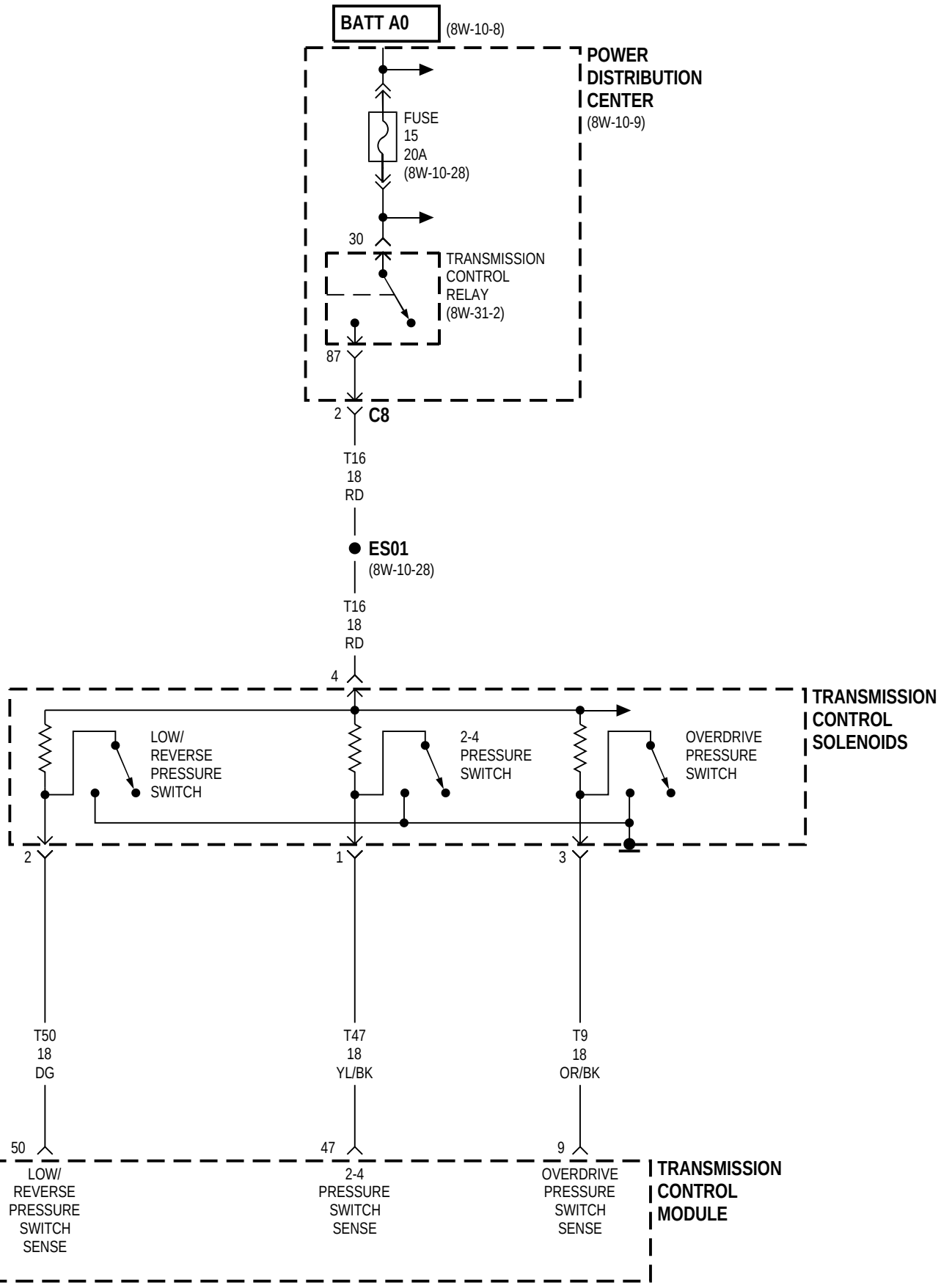
BATT A0
(8W-10-8)
POWER DISTRIBUTION CENTER
(8W-10-9)
FUSE 15 20A
(8W-10-28)
30
TRANSMISSION CONTROL RELAY
(8W-31-2)
87
2
C8
T16 18 RD
ES01
(8W-10-28)
T16 18 RD
4
TRANSMISSION CONTROL SOLENOIDS
LOW/ REVERSE PRESSURE SWITCH
2-4 PRESSURE SWITCH
OVERDRIVE PRESSURE SWITCH
2
1
3
T50 18 DG
T47 18 YL/BK
T9 18 OR/BK
50
47
9
LOW/ REVERSE PRESSURE SWITCH SENSE
2-4 PRESSURE SWITCH SENSE
OVERDRIVE PRESSURE SWITCH SENSE
TRANSMISSION CONTROL MODULE

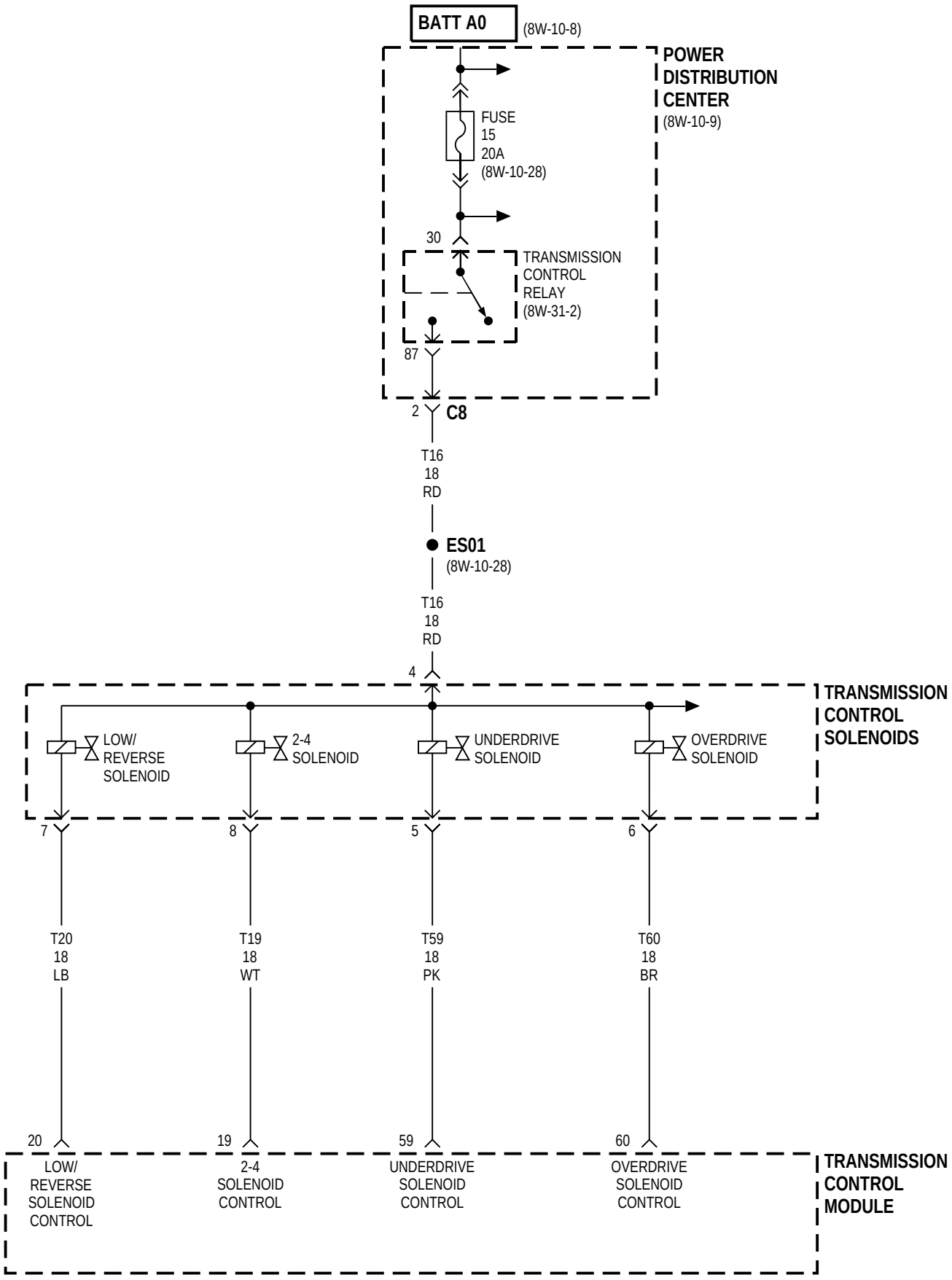
BATT A0
(8W-10-8)
POWER DISTRIBUTION CENTER
(8W-10-9)
FUSE 15 20A
(8W-10-28)
30
TRANSMISSION CONTROL RELAY
(8W-31-2)
87
2
C8
T16 18 RD
ES01
(8W-10-28)
T16 18 RD
4
TRANSMISSION CONTROL SOLENOIDS
LOW/ REVERSE SOLENOID
2-4 SOLENOID
UNDERDRIVE SOLENOID
OVERDRIVE SOLENOID
7
8
5
6
T20 18 LB
T19 18 WT
T59 18 PK
T60 18 BR
20
19
59
60
LOW/ REVERSE SOLENOID CONTROL
2-4 SOLENOID CONTROL
UNDERDRIVE SOLENOID CONTROL
OVERDRIVE SOLENOID CONTROL
TRANSMISSION CONTROL MODULE

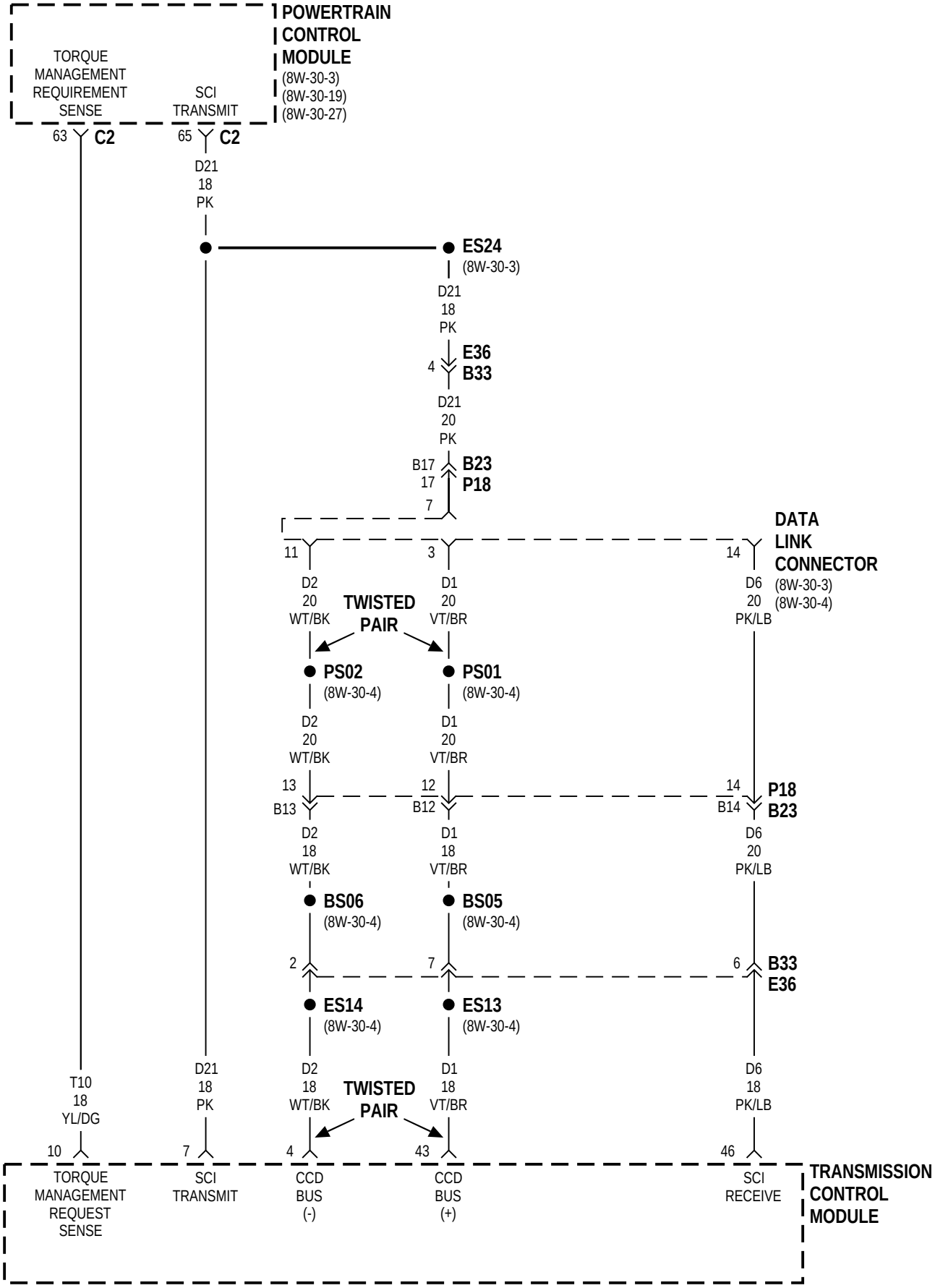
POWERTRAIN CONTROL MODULE
(8W-30-3)
(8W-30-19)
(8W-30-27)
TORQUE MANAGEMENT REQUIREMENT SENSE
SCI TRANSMIT
63 C2
65 C2
D21 18 PK
ES24
(8W-30-3)
D21 18 PK
4 E36 B33
D21 20 PK
B17 B23
17 P18
7
DATA LINK CONNECTOR
(8W-30-3)
(8W-30-4)
11
3
14
D2 20 WT/BK
D1 20 VT/BR
D6 20 PK/LB
TWISTED PAIR
PS02
(8W-30-4)
PS01
(8W-30-4)
D2 20 WT/BK
D1 20 VT/BR
13 B13
12 B12
14 B14 P18 B23
D2 18 WT/BK
D1 18 VT/BR
D6 20 PK/LB
BS06
(8W-30-4)
BS05
(8W-30-4)
2
7
6 B33 E36
ES14
(8W-30-4)
ES13
(8W-30-4)
T10 18 YL/DG
D21 18 PK
D2 18 WT/BK
D1 18 VT/BR
D6 18 PK/LB
TWISTED PAIR
10
7
4
43
46
TORQUE MANAGEMENT REQUEST SENSE
SCI TRANSMIT
CCD BUS (-)
CCD BUS (+)
SCI RECEIVE
TRANSMISSION CONTROL MODULE

8W-33 VEHICLE SPEED CONTROL

Component	Page
Accelerator Pedal Position Sensor	8W-33-5
Body Control Module	8W-33-4
BS01	8W-33-5
BS30	8W-33-4
BS32	8W-33-5
Clockspring	8W-33-2, 4
Clutch Switch	8W-33-5
Dump Solenoid	8W-33-3
ES18	8W-33-3
Fuel Pump Module	8W-33-5
Fuse 13 (PDC)	8W-33-5
G101	8W-33-3
G200	8W-33-2, 4
G300	8W-33-3, 5
Junction Block	8W-33-3
Left Headlamp Leveling Motor	8W-33-5
Left Speed Control Switch	8W-33-2, 4
Power Distribution Center	8W-33-5
Powertrain Control Module	8W-33-2, 3, 4, 5
Right Speed Control Switch	8W-33-2, 4
Stop Lamp Switch	8W-33-3, 5
Transmission Control Module	8W-33-2
Vacuum Solenoid	8W-33-3
Vehicle Speed Control Servo	8W-33-3
Vehicle Speed Sensor	8W-33-2, 4
Vent Solenoid	8W-33-3

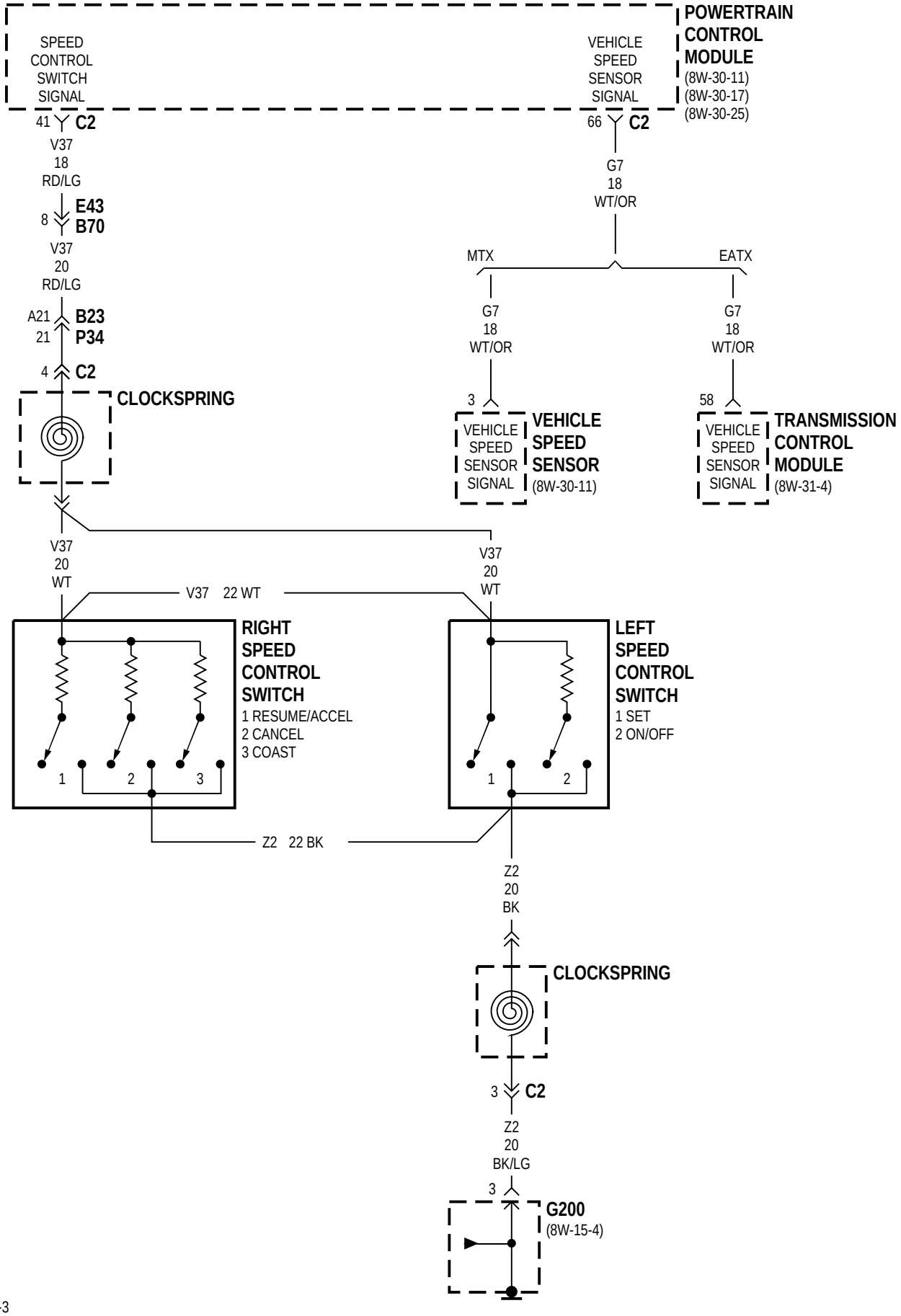
POWERTRAIN CONTROL MODULE
(8W-30-11)
(8W-30-17)
(8W-30-25)
SPEED CONTROL SWITCH SIGNAL
VEHICLE SPEED SENSOR SIGNAL
41 C2
66 C2
V37 18 RD/LG
G7 18 WT/OR
8 E43 B70
MTX
EATX
V37 20 RD/LG
G7 18 WT/OR
G7 18 WT/OR
A21 B23
21 P34
4 C2
3
58
CLOCKSPRING
VEHICLE SPEED SENSOR SIGNAL
VEHICLE SPEED SENSOR
(8W-30-11)
VEHICLE SPEED SENSOR SIGNAL
TRANSMISSION CONTROL MODULE
(8W-31-4)
V37 20 WT
V37 20 WT
V37 22 WT
RIGHT SPEED CONTROL SWITCH
1 RESUME/ACCEL
2 CANCEL
3 COAST
LEFT SPEED CONTROL SWITCH
1 SET
2 ON/OFF
1 2 3
1 2
Z2 22 BK
Z2 20 BK
CLOCKSPRING
3 C2
Z2 20 BK/LG
3
G200
(8W-15-4)

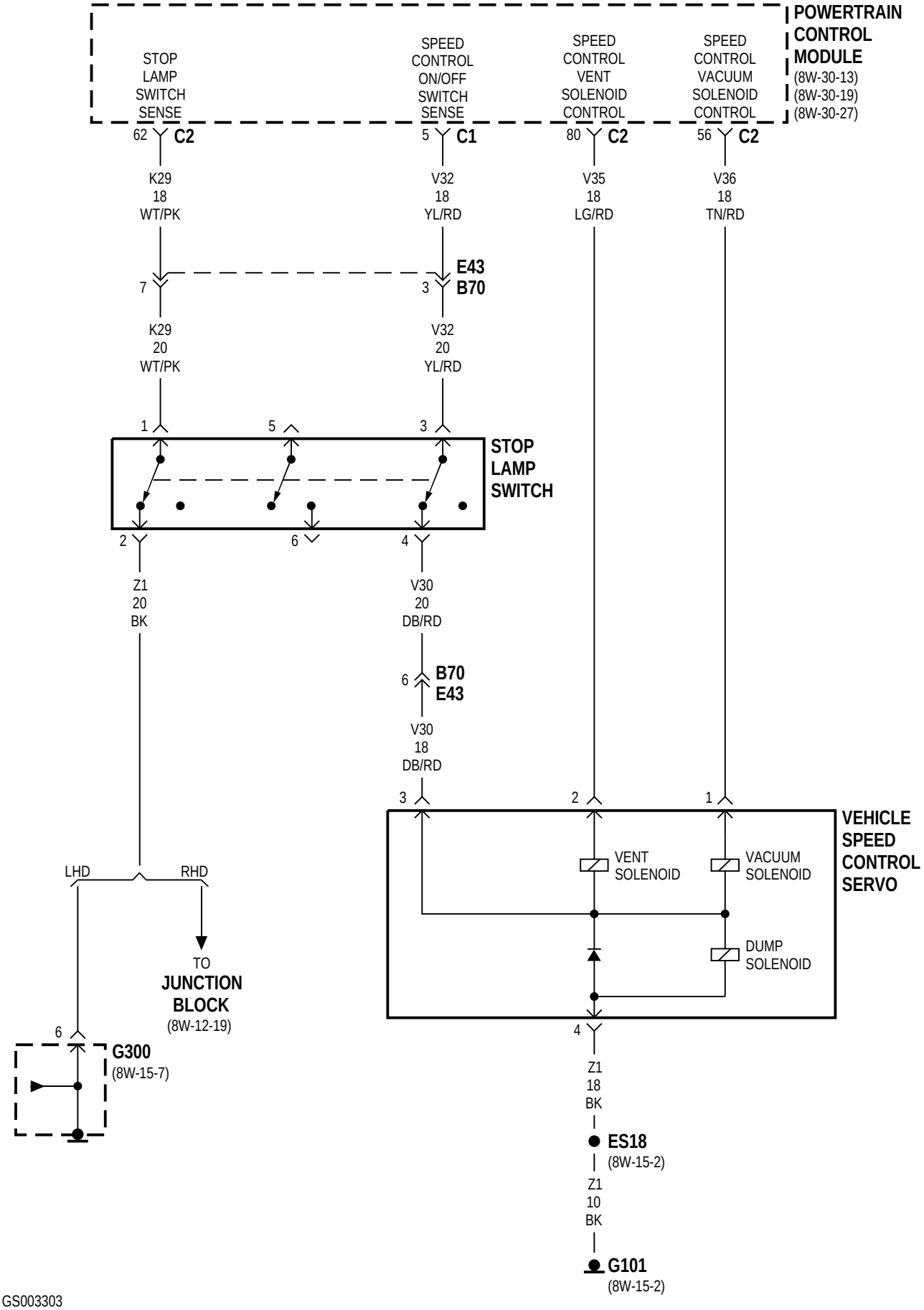
POWERTRAIN CONTROL MODULE
(8W-30-13)
(8W-30-19)
(8W-30-27)
STOP LAMP SWITCH SENSE
SPEED CONTROL ON/OFF SWITCH SENSE
SPEED CONTROL VENT SOLENOID CONTROL
SPEED CONTROL VACUUM SOLENOID CONTROL
62 C2
5 C1
80 C2
56 C2
K29 18 WT/PK
V32 18 YL/RD
V35 18 LG/RD
V36 18 TN/RD
7
3
E43
B70
K29 20 WT/PK
V32 20 YL/RD
1
5
3
STOP LAMP SWITCH
2
6
4
Z1 20 BK
V30 20 DB/RD
6
B70
E43
V30 18 DB/RD
3
2
1
VEHICLE SPEED CONTROL SERVO
VENT SOLENOID
VACUUM SOLENOID
DUMP SOLENOID
LHD
RHD
TO JUNCTION BLOCK
(8W-12-19)
6
G300
(8W-15-7)
4
Z1 18 BK
ES18
(8W-15-2)
Z1 10 BK
G101
(8W-15-2)

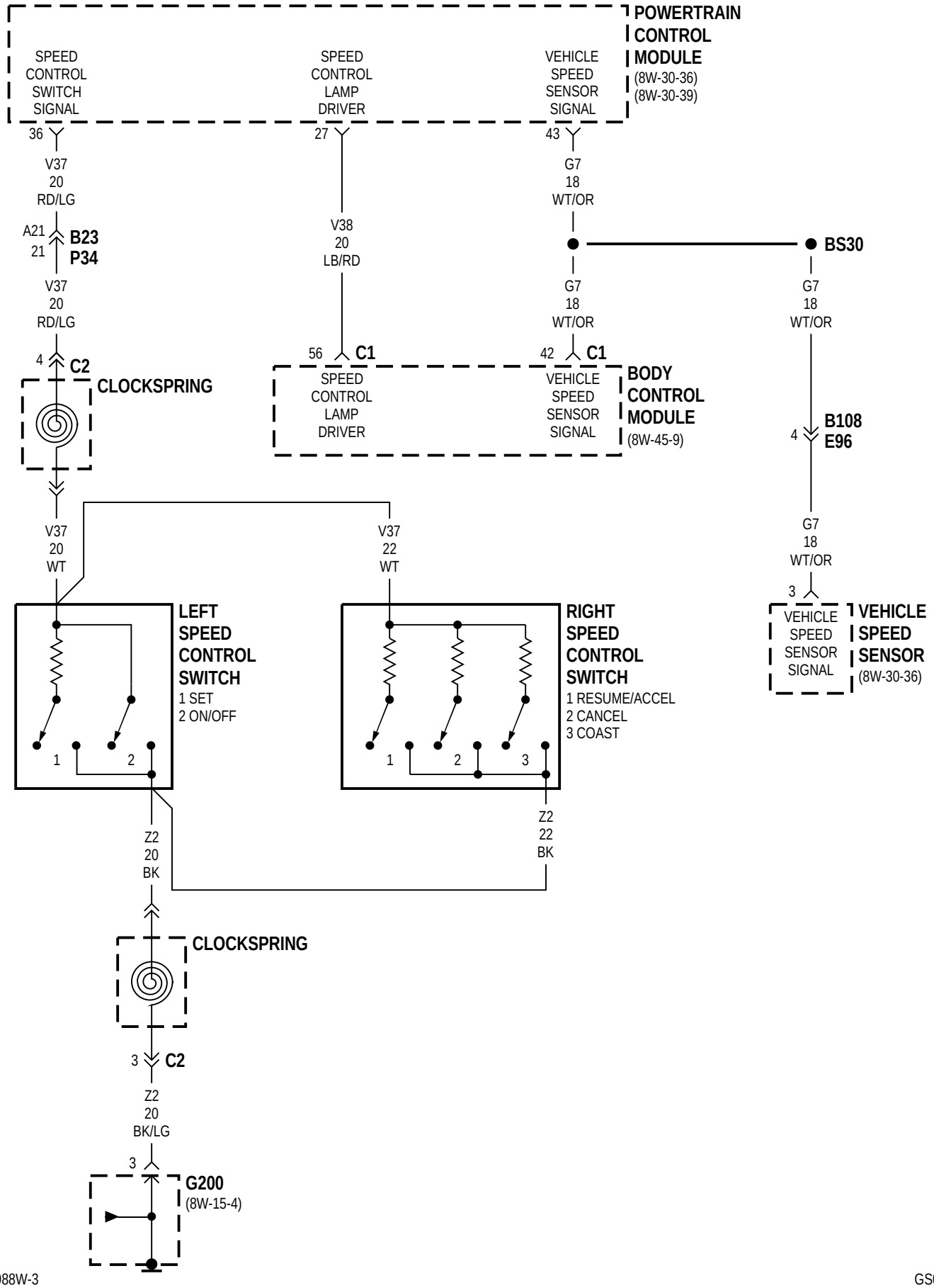
POWERTRAIN CONTROL MODULE
(8W-30-36)
(8W-30-39)
SPEED CONTROL SWITCH SIGNAL
SPEED CONTROL LAMP DRIVER
VEHICLE SPEED SENSOR SIGNAL
36
27
43
V37 20 RD/LG
V38 20 LB/RD
G7 18 WT/OR
A21
21
B23
P34
BS30
4
C2
CLOCKSPRING
56
C1
42
C1
BODY CONTROL MODULE
(8W-45-9)
B108
E96
V37 20 WT
V37 22 WT
LEFT SPEED CONTROL SWITCH
1 SET
2 ON/OFF
RIGHT SPEED CONTROL SWITCH
1 RESUME/ACCEL
2 CANCEL
3 COAST
VEHICLE SPEED SENSOR
(8W-30-36)
Z2 20 BK
Z2 22 BK
3
Z2 20 BK/LG
G200
(8W-15-4)

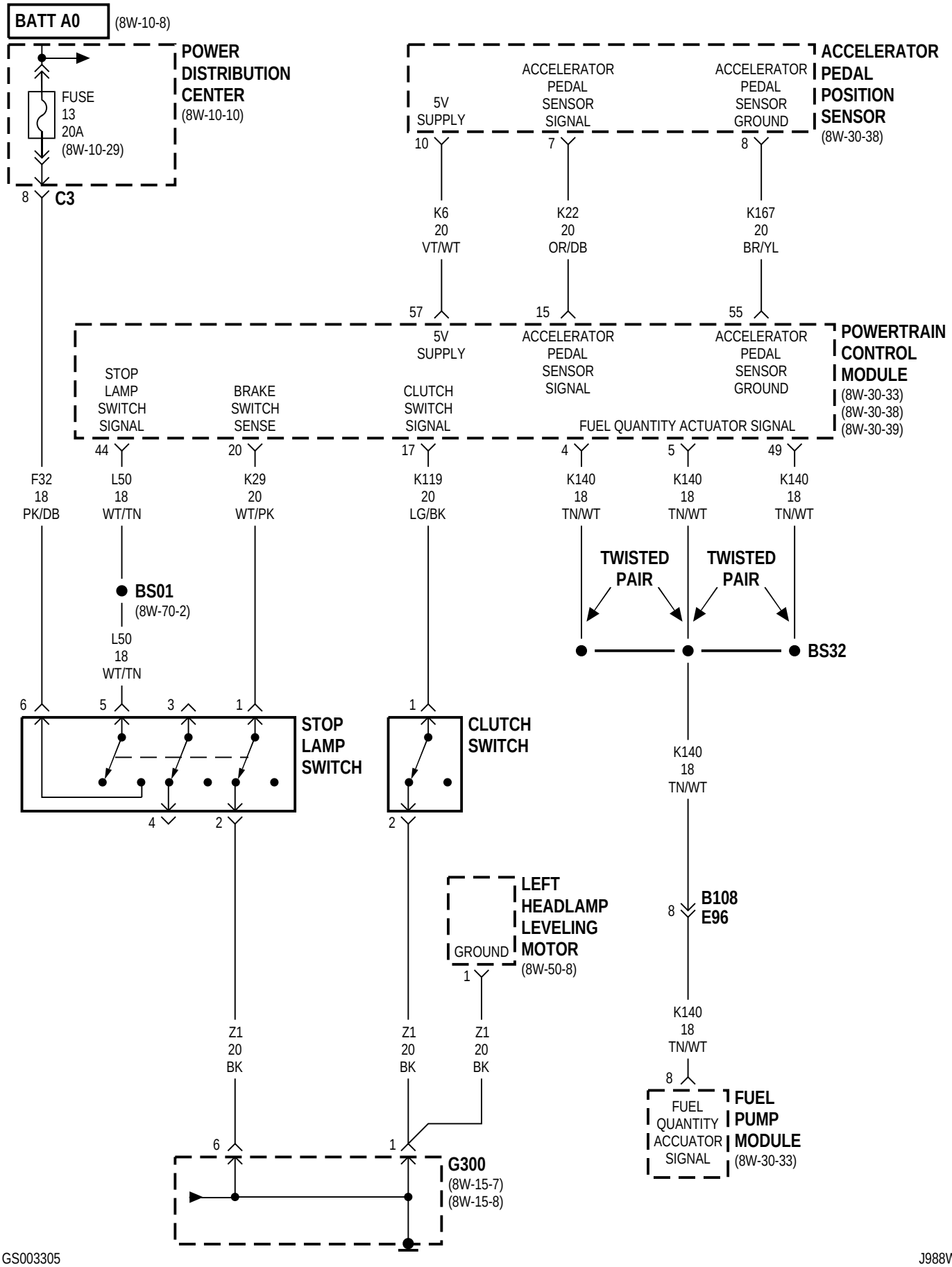
BATT A0
(8W-10-8)
POWER DISTRIBUTION CENTER
(8W-10-10)
FUSE 13 20A
(8W-10-29)
8
C3
ACCELERATOR PEDAL POSITION SENSOR
(8W-30-38)
5V SUPPLY
ACCELERATOR PEDAL SENSOR SIGNAL
ACCELERATOR PEDAL SENSOR GROUND
10
7
8
K6 20 VT/WT
K22 20 OR/DB
K167 20 BR/YL
57
15
55
POWERTRAIN CONTROL MODULE
(8W-30-33)
(8W-30-38)
(8W-30-39)
5V SUPPLY
ACCELERATOR PEDAL SENSOR SIGNAL
ACCELERATOR PEDAL SENSOR GROUND
STOP LAMP SWITCH SIGNAL
BRAKE SWITCH SENSE
CLUTCH SWITCH SIGNAL
FUEL QUANTITY ACTUATOR SIGNAL
44
20
17
4
5
49
F32 18 PK/DB
L50 18 WT/TN
K29 20 WT/PK
K119 20 LG/BK
K140 18 TN/WT
K140 18 TN/WT
K140 18 TN/WT
TWISTED PAIR
TWISTED PAIR
BS01
(8W-70-2)
BS32
L50 18 WT/TN
6
5
3
1
1
STOP LAMP SWITCH
CLUTCH SWITCH
4
2
2
K140 18 TN/WT
LEFT HEADLAMP LEVELING MOTOR
(8W-50-8)
GROUND
1
8
B108
E96
K140 18 TN/WT
Z1 20 BK
Z1 20 BK
Z1 20 BK
8
FUEL QUANTITY ACCUATOR SIGNAL
FUEL PUMP MODULE
(8W-30-33)
6
1
G300
(8W-15-7)
(8W-15-8)

8W-35 ANTI-LOCK BRAKES

Component	Page
ABS Warning Lamp	8W-35-3
Body Control Module	8W-35-2, 3
BS01	8W-35-3
BS05	8W-35-3
BS06	8W-35-3
Controller Anti-Lock Brake	8W-35-2, 3, 4
Data Link Connector	8W-35-3
Fuse 6 (JB)	8W-35-3
Fuse 12 (JB)	8W-35-2
Fuse 12 (PDC)	8W-35-2
Fuse 13 (PDC)	8W-35-3
Fuse 25 (PDC)	8W-35-2
G104	8W-35-2
G300	8W-35-2
Junction Block	8W-35-2, 3
Left Front Wheel Speed Sensor	8W-35-4
Left Rear Wheel Speed Sensor	8W-35-4
Message Center	8W-35-3
Power Distribution Center	8W-35-2, 3
Power Mirror Switch	8W-35-2
PS01	8W-35-3
PS02	8W-35-3
Right Front Wheel Speed Sensor	8W-35-4
Right Rear Wheel Speed Sensor	8W-35-4
Stop Lamp Switch	8W-35-3
Traction Control Switch	8W-35-2

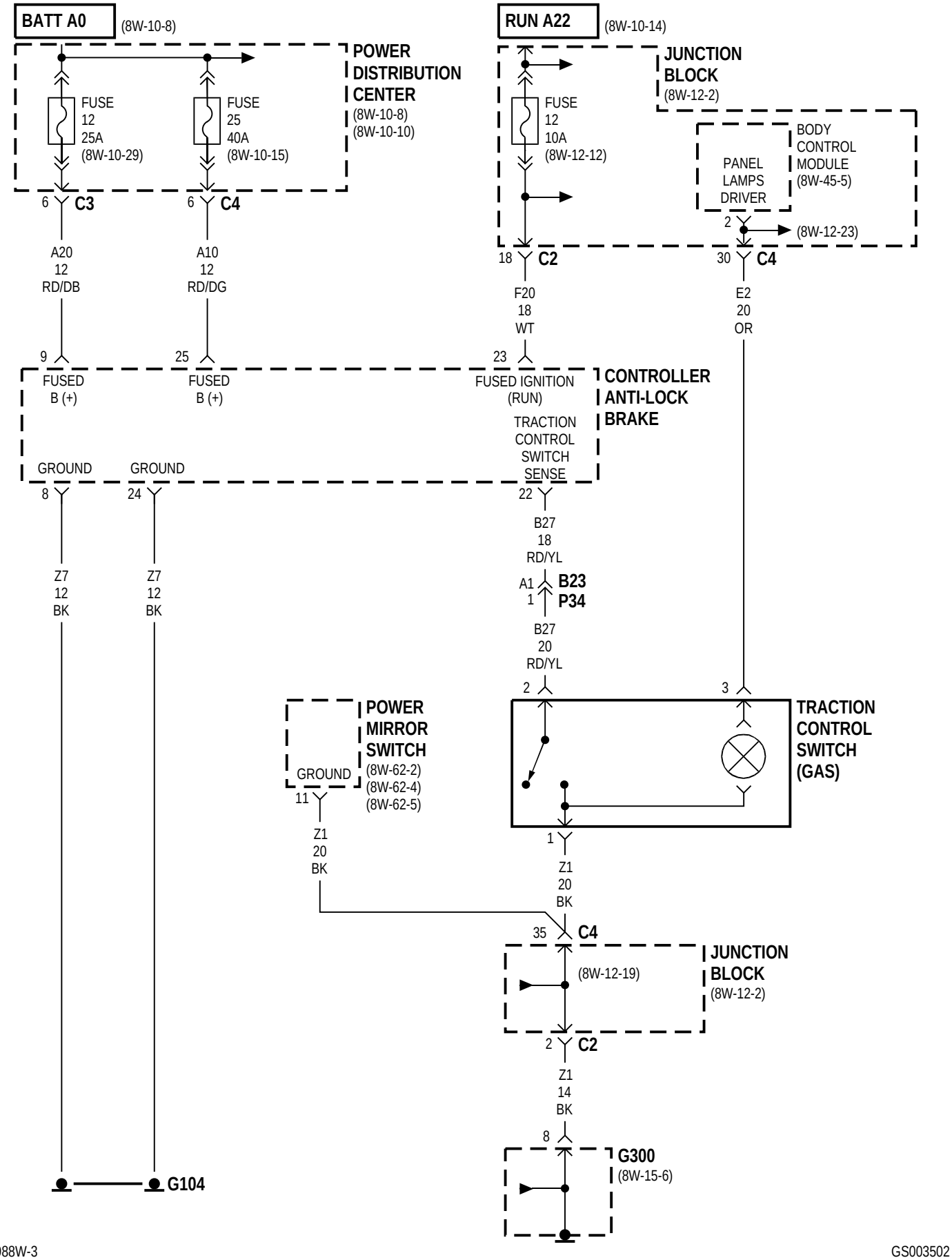
BATT A0
(8W-10-8)
POWER DISTRIBUTION CENTER
(8W-10-8)
(8W-10-10)
FUSE 12 25A (8W-10-29)
FUSE 25 40A (8W-10-15)
6 C3
6 C4
A20 12 RD/DB
A10 12 RD/DG
9
25
FUSED B (+)
FUSED B (+)
RUN A22
(8W-10-14)
JUNCTION BLOCK
(8W-12-2)
FUSE 12 10A (8W-12-12)
BODY CONTROL MODULE
(8W-45-5)
PANEL LAMPS DRIVER
2
(8W-12-23)
18 C2
30 C4
F20 18 WT
E2 20 OR
23
FUSED IGNITION (RUN)
CONTROLLER ANTI-LOCK BRAKE
TRACTION CONTROL SWITCH SENSE
GROUND
GROUND
8
24
22
Z7 12 BK
Z7 12 BK
B27 18 RD/YL
A1 B23
1 P34
B27 20 RD/YL
2
3
POWER MIRROR SWITCH
(8W-62-2)
(8W-62-4)
(8W-62-5)
GROUND
11
Z1 20 BK
TRACTION CONTROL SWITCH (GAS)
1
Z1 20 BK
35 C4
(8W-12-19)
JUNCTION BLOCK
(8W-12-2)
2 C2
Z1 14 BK
8
G300
(8W-15-6)
G104

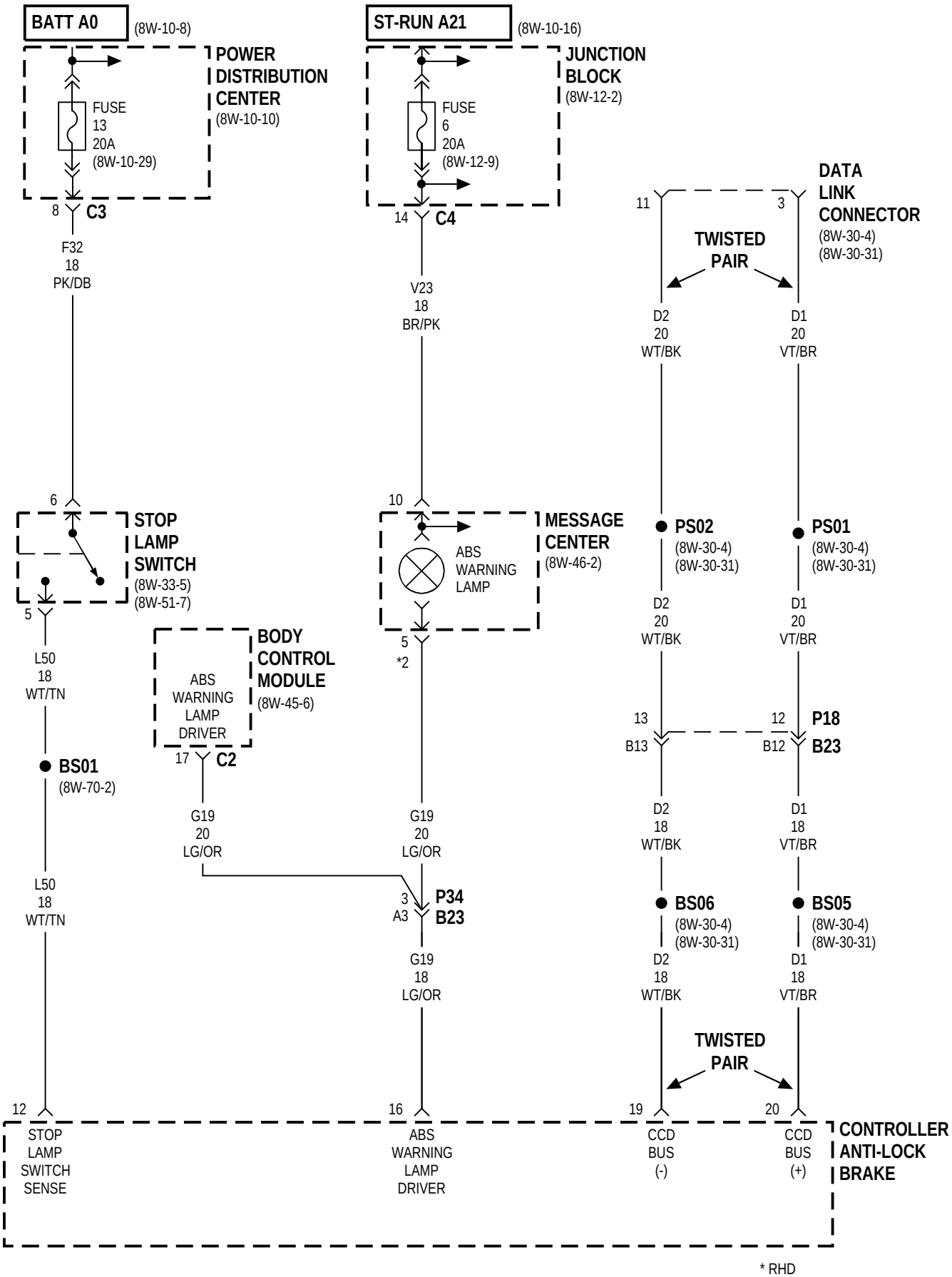
BATT A0
(8W-10-8)
POWER DISTRIBUTION CENTER
(8W-10-10)
FUSE 13 20A (8W-10-29)
8 C3
F32 18 PK/DB
ST-RUN A21
(8W-10-16)
JUNCTION BLOCK
(8W-12-2)
FUSE 6 20A (8W-12-9)
14 C4
V23 18 BR/PK
DATA LINK CONNECTOR
(8W-30-4)
(8W-30-31)
11
3
TWISTED PAIR
D2 20 WT/BK
D1 20 VT/BR
6
STOP LAMP SWITCH
(8W-33-5)
(8W-51-7)
5
L50 18 WT/TN
BS01
(8W-70-2)
L50 18 WT/TN
10
MESSAGE CENTER
(8W-46-2)
ABS WARNING LAMP
5
*2
PS02
(8W-30-4)
(8W-30-31)
PS01
(8W-30-4)
(8W-30-31)
D2 20 WT/BK
D1 20 VT/BR
BODY CONTROL MODULE
(8W-45-6)
ABS WARNING LAMP DRIVER
17 C2
G19 20 LG/OR
13 B13
12 B12
P18 B23
D2 18 WT/BK
D1 18 VT/BR
3 A3
P34 B23
G19 20 LG/OR
G19 18 LG/OR
BS06
(8W-30-4)
(8W-30-31)
BS05
(8W-30-4)
(8W-30-31)
TWISTED PAIR
12
16
19
20
STOP LAMP SWITCH SENSE
ABS WARNING LAMP DRIVER
CCD BUS (-)
CCD BUS (+)
CONTROLLER ANTI-LOCK BRAKE
* RHD

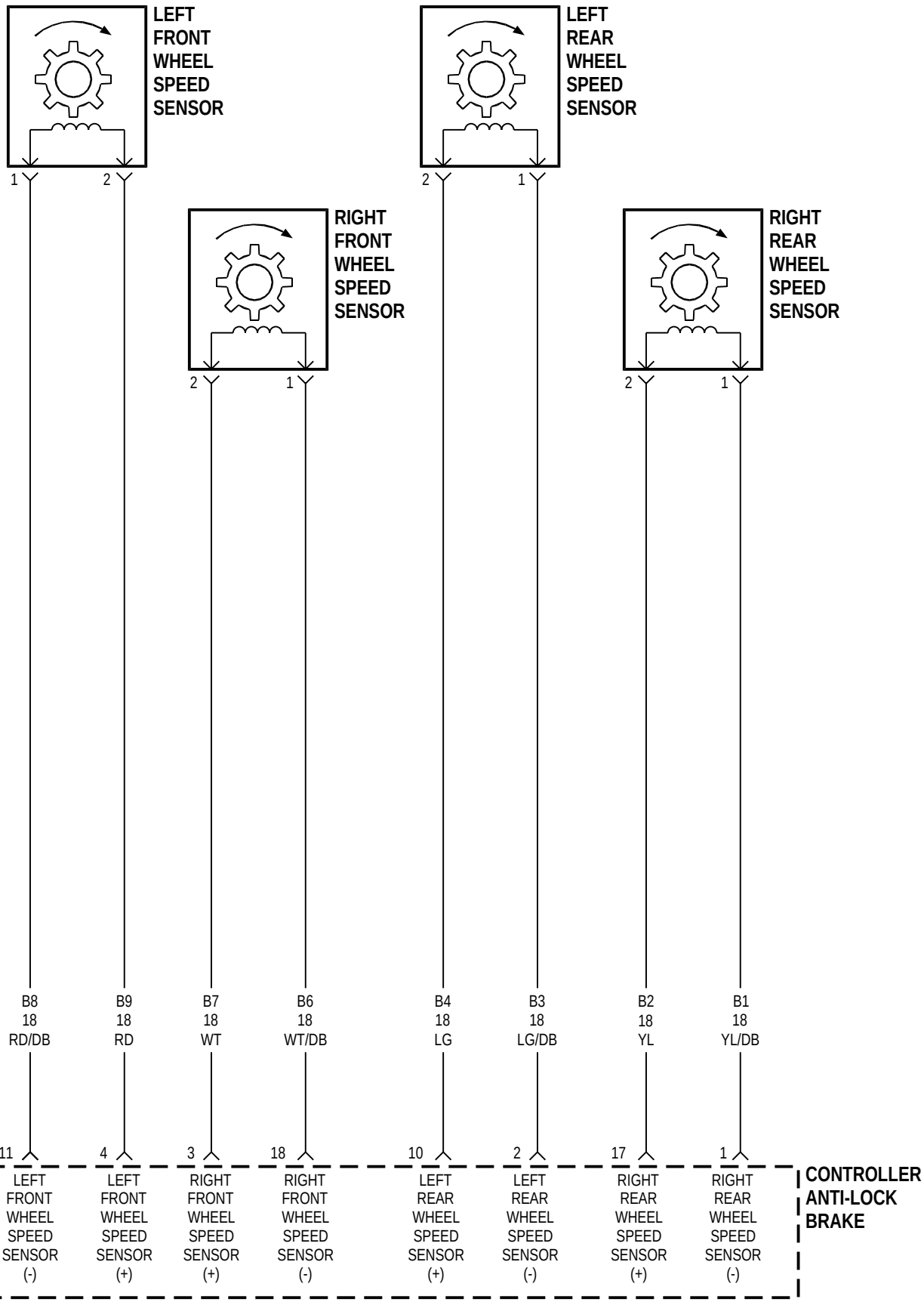
LEFT FRONT WHEEL SPEED SENSOR
1
2
LEFT REAR WHEEL SPEED SENSOR
2
1
RIGHT FRONT WHEEL SPEED SENSOR
2
1
RIGHT REAR WHEEL SPEED SENSOR
2
1
B8 18 RD/DB
B9 18 RD
B7 18 WT
B6 18 WT/DB
B4 18 LG
B3 18 LG/DB
B2 18 YL
B1 18 YL/DB
11
4
3
18
10
2
17
1
LEFT FRONT WHEEL SPEED SENSOR (-)
LEFT FRONT WHEEL SPEED SENSOR (+)
RIGHT FRONT WHEEL SPEED SENSOR (+)
RIGHT FRONT WHEEL SPEED SENSOR (-)
LEFT REAR WHEEL SPEED SENSOR (+)
LEFT REAR WHEEL SPEED SENSOR (-)
RIGHT REAR WHEEL SPEED SENSOR (+)
RIGHT REAR WHEEL SPEED SENSOR (-)
CONTROLLER ANTI-LOCK BRAKE

8W-39 VEHICLE THEFT SECURITY SYSTEM

Component	Page
Body Control Module	8W-39-2, 3, 4
BS19	8W-39-2
Clockspring	8W-39-2
Driver Door Ajar Switch	8W-39-2
Driver Door Arm/Disarm Switch	8W-39-3
Driver Door Lock Switch	8W-39-3
Fuse 9 (PDC)	8W-39-2
Fuse 18 (PDC)	8W-39-5
Fuse 28 (PDC)	8W-39-2
G200	8W-39-5
G301	8W-39-2, 3, 4
G302	8W-39-4
G400	8W-39-3, 4
High Note Horn	8W-39-2
Hood Ajar Switch	8W-39-4
Horn Relay	8W-39-2
Horn Switch	8W-39-2
Junction Block	8W-39-2, 5
Left Rear Door Ajar Switch	8W-39-4
Liftgate Ajar Switch	8W-39-4
Liftgate Arm/Disarm Switch	8W-39-3
Low Note Horn	8W-39-2
Memory Seat/Mirror Module	8W-39-2
Message Center	8W-39-2
Passenger Door Ajar Switch	8W-39-2
Passenger Door Arm/Disarm Switch	8W-39-3
Passenger Door Lock Switch	8W-39-3
Power Distribution Center	8W-39-2, 5
PS01	8W-39-5
PS02	8W-39-5
PTC 1 (JB)	8W-39-5
Remote Keyless Entry Module	8W-39-2
Right Rear Door Ajar Switch	8W-39-4
Sentry Key Immobilizer Module	8W-39-5
VTSS Lamp	8W-39-2

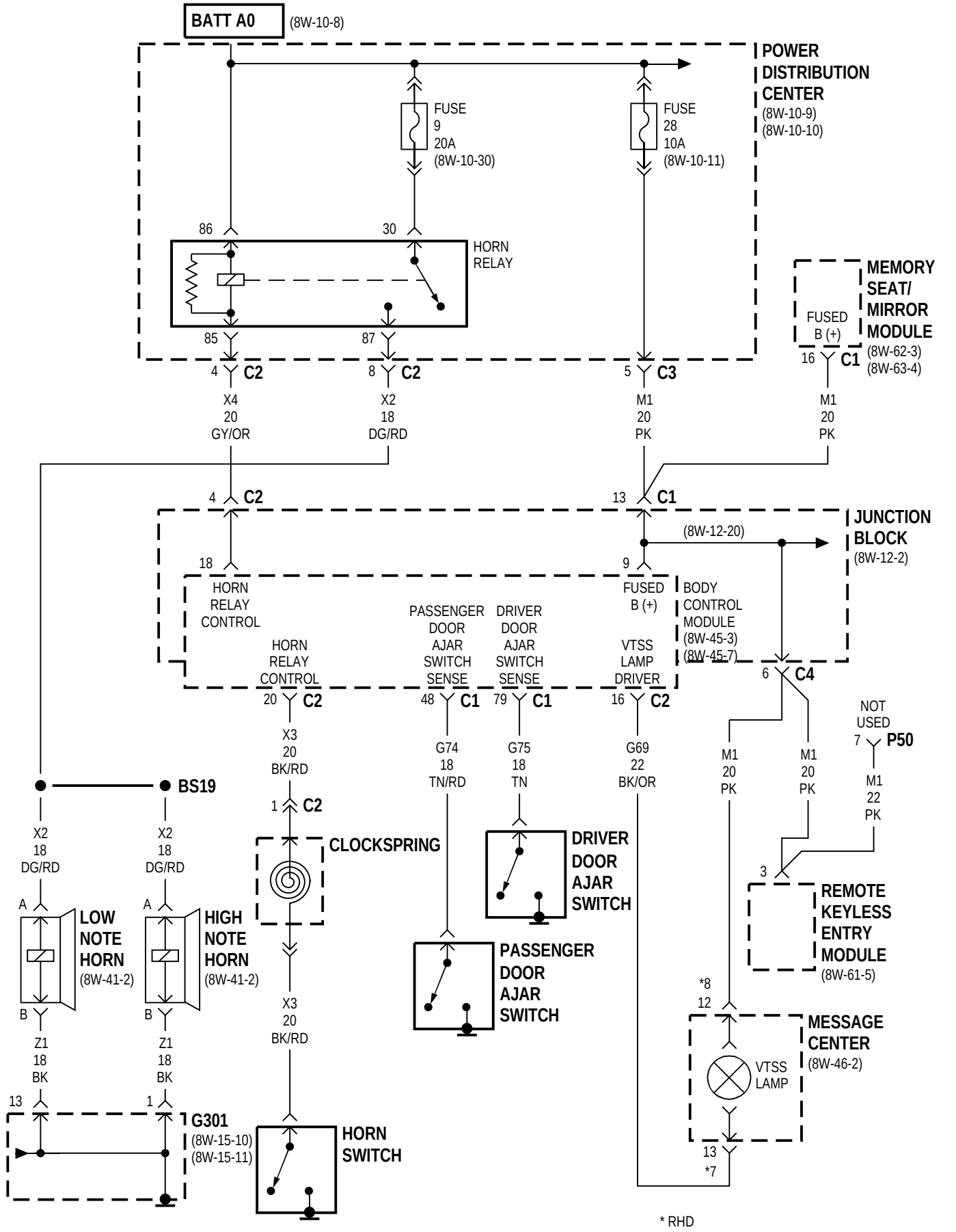
BATT A0
(8W-10-8)
POWER DISTRIBUTION CENTER
(8W-10-9)
(8W-10-10)
FUSE 9 20A (8W-10-30)
FUSE 28 10A (8W-10-11)
86
30
HORN RELAY
85
87
4 C2
8 C2
5 C3
X4 20 GY/OR
X2 18 DG/RD
M1 20 PK
MEMORY SEAT/ MIRROR MODULE
(8W-62-3)
(8W-63-4)
FUSED B (+)
16 C1
M1 20 PK
4 C2
13 C1
JUNCTION BLOCK
(8W-12-2)
(8W-12-20)
18
9
HORN RELAY CONTROL
FUSED B (+)
BODY CONTROL MODULE
(8W-45-3)
(8W-45-7)
PASSENGER DOOR AJAR SWITCH SENSE
DRIVER DOOR AJAR SWITCH SENSE
VTSS LAMP DRIVER
6 C4
HORN RELAY CONTROL
20 C2
48 C1
79 C1
16 C2
X3 20 BK/RD
G74 18 TN/RD
G75 18 TN
G69 22 BK/OR
M1 20 PK
M1 20 PK
NOT USED
7 P50
M1 22 PK
BS19
X2 18 DG/RD
X2 18 DG/RD
1 C2
CLOCKSPRING
DRIVER DOOR AJAR SWITCH
3
REMOTE KEYLESS ENTRY MODULE
(8W-61-5)
A
B
LOW NOTE HORN
(8W-41-2)
HIGH NOTE HORN
(8W-41-2)
PASSENGER DOOR AJAR SWITCH
*8
12
MESSAGE CENTER
(8W-46-2)
VTSS LAMP
Z1 18 BK
Z1 18 BK
X3 20 BK/RD
13
1
G301
(8W-15-10)
(8W-15-11)
HORN SWITCH
13
*7
* RHD

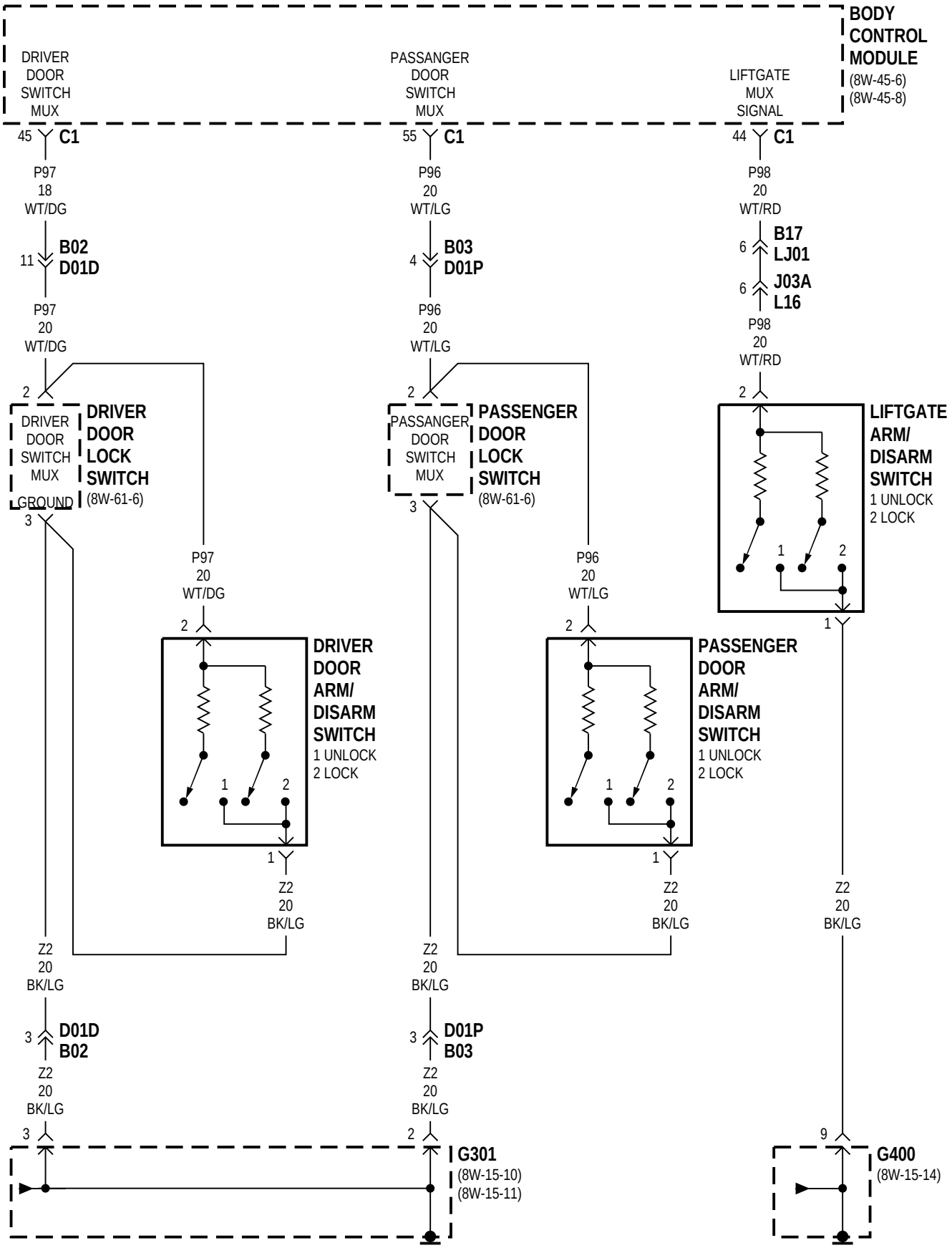
BODY CONTROL MODULE
(8W-45-6)
(8W-45-8)
DRIVER DOOR SWITCH MUX
PASSENGER DOOR SWITCH MUX
LIFTGATE MUX SIGNAL
45 C1
55 C1
44 C1
P97 18 WT/DG
P96 20 WT/LG
P98 20 WT/RD
11 B02 D01D
4 B03 D01P
6 B17 LJ01
6 J03A L16
P97 20 WT/DG
P96 20 WT/LG
P98 20 WT/RD
2
DRIVER DOOR SWITCH MUX
DRIVER DOOR LOCK SWITCH
(8W-61-6)
PASSENGER DOOR SWITCH MUX
PASSENGER DOOR LOCK SWITCH
(8W-61-6)
LIFTGATE ARM/ DISARM SWITCH
1 UNLOCK
2 LOCK
GROUND
3
P97 20 WT/DG
P96 20 WT/LG
DRIVER DOOR ARM/ DISARM SWITCH
1 UNLOCK
2 LOCK
PASSENGER DOOR ARM/ DISARM SWITCH
1 UNLOCK
2 LOCK
1
Z2 20 BK/LG
3 D01D B02
3 D01P B03
2
G301
(8W-15-10)
(8W-15-11)
9
G400
(8W-15-14)

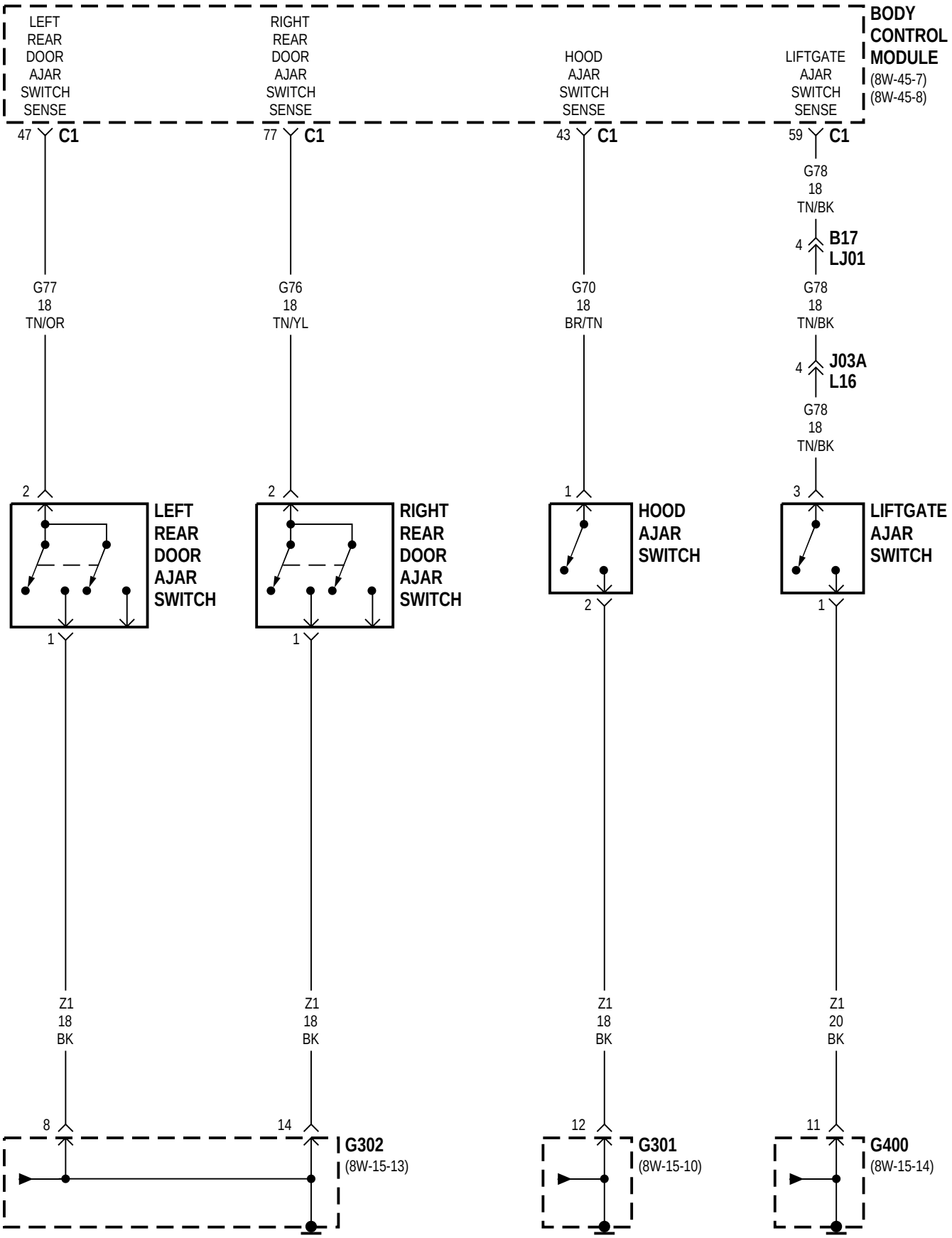
BODY CONTROL MODULE
(8W-45-7)
(8W-45-8)
LEFT REAR DOOR AJAR SWITCH SENSE
RIGHT REAR DOOR AJAR SWITCH SENSE
HOOD AJAR SWITCH SENSE
LIFTGATE AJAR SWITCH SENSE
47 C1
77 C1
43 C1
59 C1
G78 18 TN/BK
4 B17 LJ01
G78 18 TN/BK
4 J03A L16
G78 18 TN/BK
G77 18 TN/OR
G76 18 TN/YL
G70 18 BR/TN
2
2
1
3
LEFT REAR DOOR AJAR SWITCH
RIGHT REAR DOOR AJAR SWITCH
HOOD AJAR SWITCH
LIFTGATE AJAR SWITCH
1
1
2
1
Z1 18 BK
Z1 18 BK
Z1 18 BK
Z1 20 BK
8
14
12
11
G302
(8W-15-13)
G301
(8W-15-10)
G400
(8W-15-14)

BUILT-UP-EXPORT

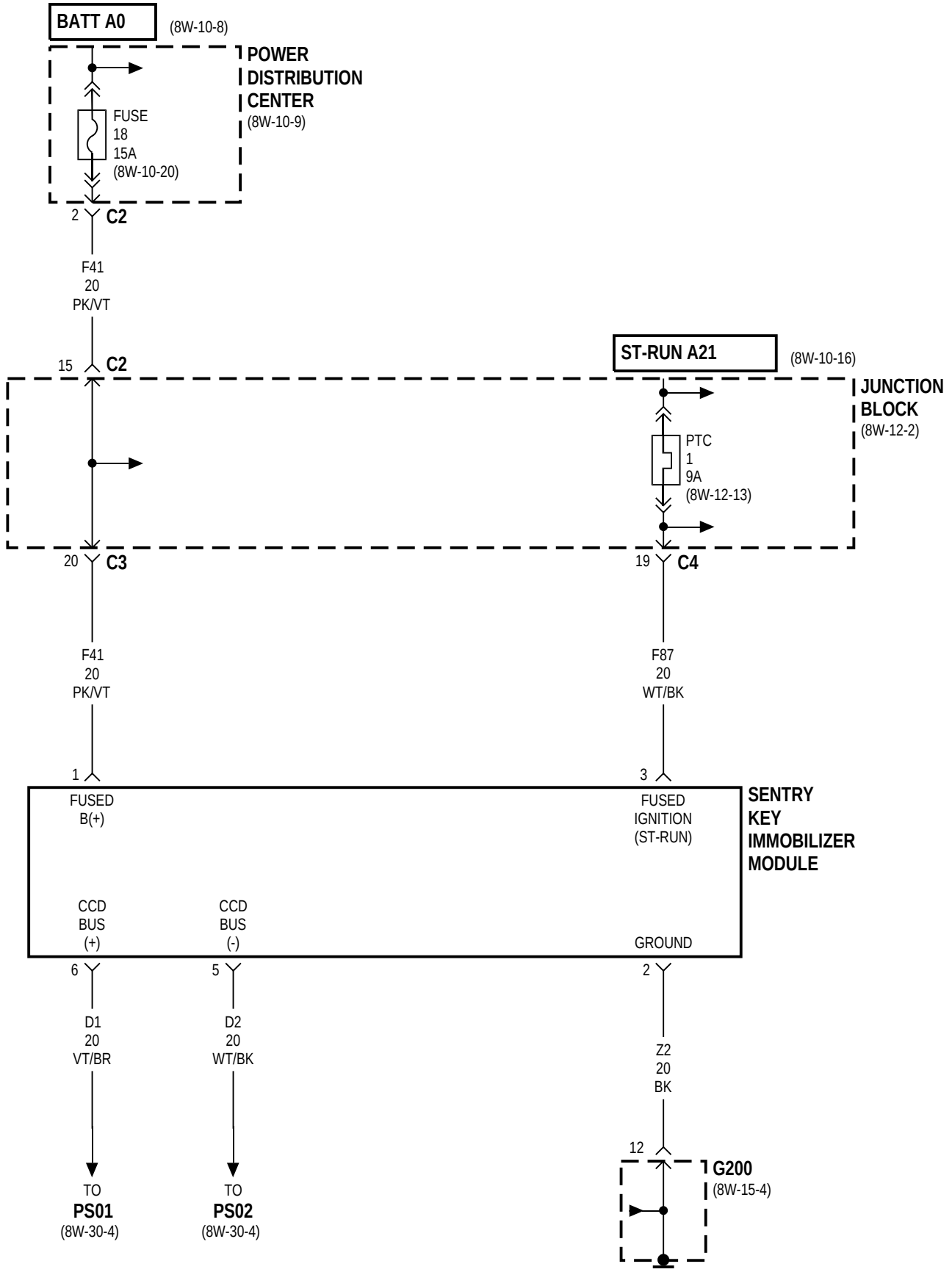

8W-40 INSTRUMENT CLUSTER

Component	Page
A/C Heater Control	8W-40-4
AW4 B13	8W-40-2
Body Control Module	8W-40-2, 3, 4, 5, 6, 7, 8, 9, 10, 11
BS05	8W-40-5, 6, 8, 10
BS06	8W-40-5, 6, 8, 10
BS30	8W-40-7
BS40	8W-40-7
Clockspring	8W-40-10, 11
Cluster Illumination Lamps	8W-40-4
Cruise Indicator Lamp	8W-40-10, 11
Data Link Connector	8W-40-9
Door Ajar Indicator Lamp	8W-40-3
Driver Door Ajar Switch	8W-40-3
Electronic PRNDL Indicator	8W-40-5
Engine Coolant Temperature Gauge	8W-40-8, 9
Engine Coolant Temperature Sensor	8W-40-8, 9
Engine Speed Sensor	8W-40-7
ES13	8W-40-5, 6, 8, 10
ES14	8W-40-5, 6, 8, 10
ES30	8W-40-7
Fuel Gauge	8W-40-2
Fuel Tank Module	8W-40-2
Fuse 2 (JB)	8W-40-2, 3, 4, 5, 6, 8, 10
Fuse 28 (PDC)	8W-40-2
G200	8W-40-2
G300	8W-40-4
G301	8W-40-7
G302	8W-40-3
G400	8W-40-3
Ignition Switch	8W-40-2, 4
Instrument Cluster	8W-40-2, 3, 4, 5, 6, 7, 8, 9, 10, 11
Junction Block	8W-40-2, 3, 4, 5, 6, 8, 10
Left Rear Door Ajar Switch	8W-40-3
Left Speed Control Switch	8W-40-10, 11
Liftgate Ajar Indicator Lamp	8W-40-3
Liftgate Ajar Switch	8W-40-3
Low Fuel Warning Indicator Lamp	8W-40-2
Low Washer Fluid Level Indicator Lamp	8W-40-10, 11
Low Washer Fluid Switch	8W-40-10, 11
Memory Seat/Mirror Module	8W-40-2
Odometer	8W-40-5
Passenger Door Ajar Switch	8W-40-3
Power Distribution Center	8W-40-2
Powertrain Control Module	8W-40-5, 6, 7, 8, 9, 10, 11
PS01	8W-40-2, 3, 4, 5, 6, 7, 8, 9, 10, 11
PS02	8W-40-2, 3, 4, 5, 6, 7, 8, 9, 10, 11
Right Rear Door Ajar Switch	8W-40-3
Right Speed Control Switch	8W-40-10, 11
Seat Belt Indicator Lamp	8W-40-4
Seat Belt Switch	8W-40-4
Speedometer	8W-40-6, 7
Tachometer	8W-40-6, 7
Transmission Control Module	8W-40-5, 6
Trip Odometer	8W-40-5
Vehicle Speed Sensor	8W-40-6, 7
Voltage Indicator Lamp	8W-40-8, 9

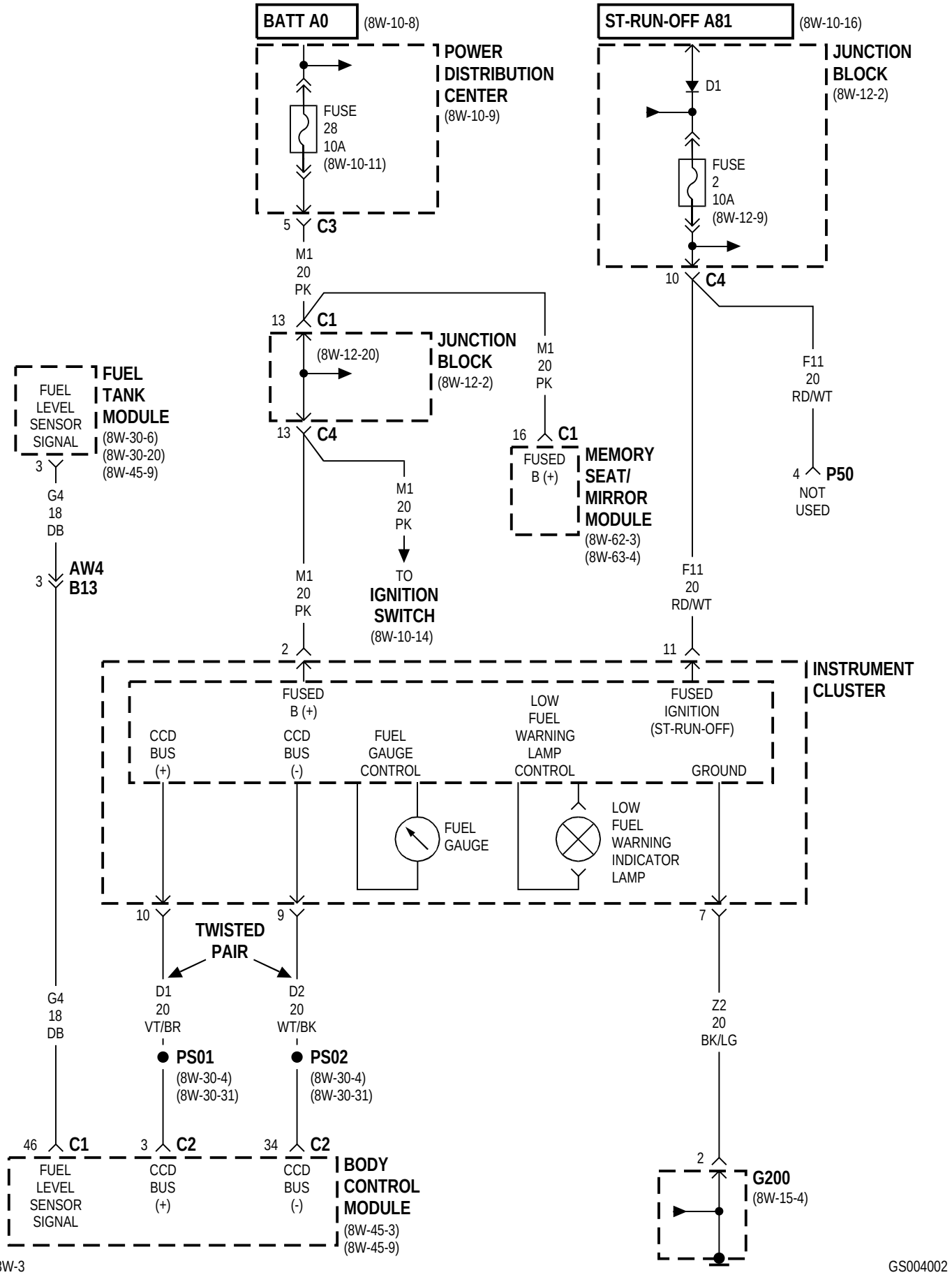
BATT A0
(8W-10-8)
POWER DISTRIBUTION CENTER
(8W-10-9)
FUSE 28 10A (8W-10-11)
5 C3
M1 20 PK
ST-RUN-OFF A81
(8W-10-16)
JUNCTION BLOCK
(8W-12-2)
D1
FUSE 2 10A (8W-12-9)
10 C4
13 C1
(8W-12-20)
JUNCTION BLOCK
(8W-12-2)
13 C4
M1 20 PK
16 C1
FUSED B (+)
MEMORY SEAT/ MIRROR MODULE
(8W-62-3)
(8W-63-4)
F11 20 RD/WT
4 P50
NOT USED
FUEL LEVEL SENSOR SIGNAL
FUEL TANK MODULE
(8W-30-6)
(8W-30-20)
(8W-45-9)
3
G4 18 DB
3 AW4 B13
M1 20 PK
TO IGNITION SWITCH
(8W-10-14)
F11 20 RD/WT
2
11
INSTRUMENT CLUSTER
FUSED B (+)
CCD BUS (+)
CCD BUS (-)
FUEL GAUGE CONTROL
LOW FUEL WARNING LAMP CONTROL
FUSED IGNITION (ST-RUN-OFF)
GROUND
FUEL GAUGE
LOW FUEL WARNING INDICATOR LAMP
10
9
7
TWISTED PAIR
D1 20 VT/BR
D2 20 WT/BK
Z2 20 BK/LG
PS01
(8W-30-4)
(8W-30-31)
PS02
(8W-30-4)
(8W-30-31)
G4 18 DB
46 C1
3 C2
34 C2
FUEL LEVEL SENSOR SIGNAL
CCD BUS (+)
CCD BUS (-)
BODY CONTROL MODULE
(8W-45-3)
(8W-45-9)
2
G200
(8W-15-4)

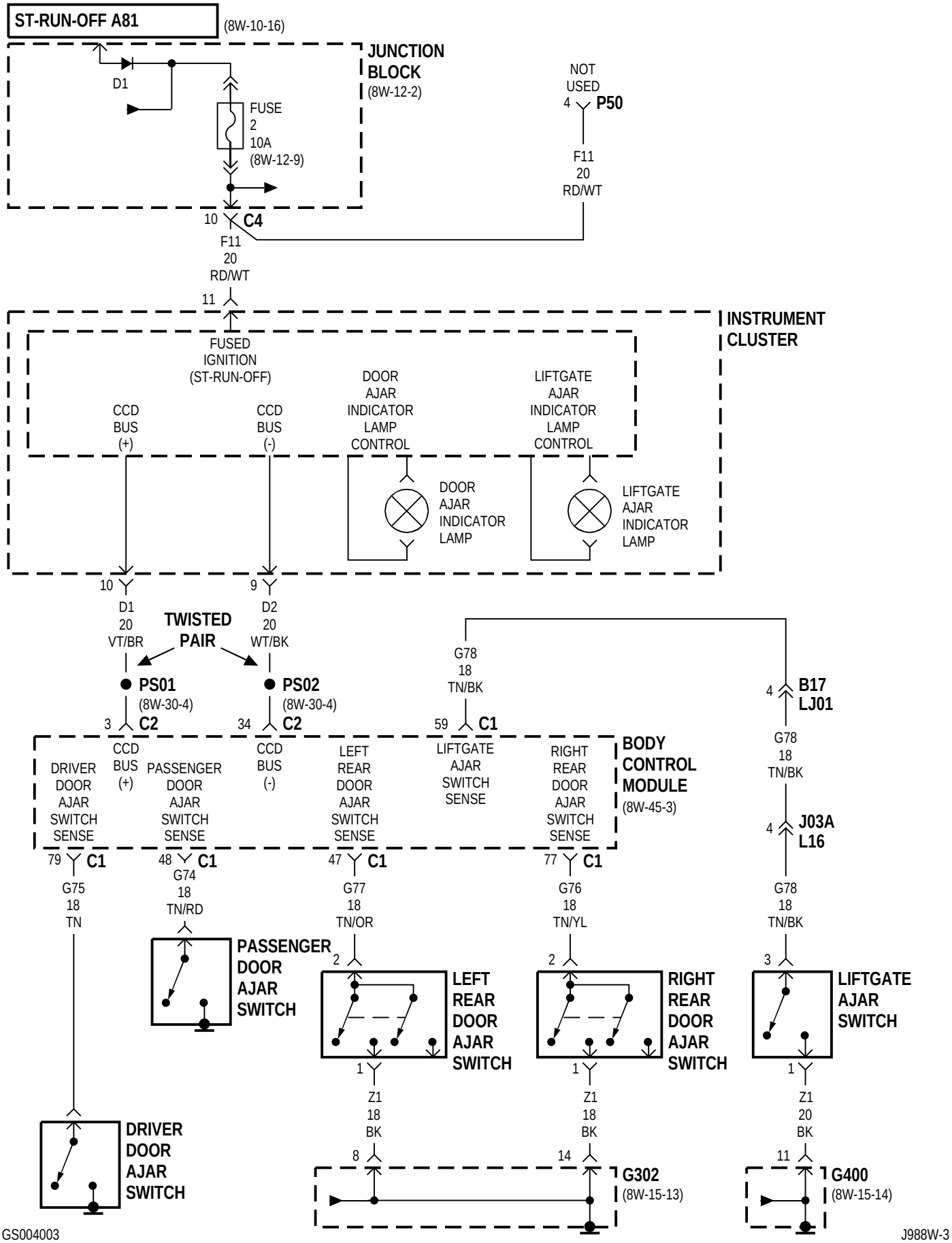

GS004003

J988W-3

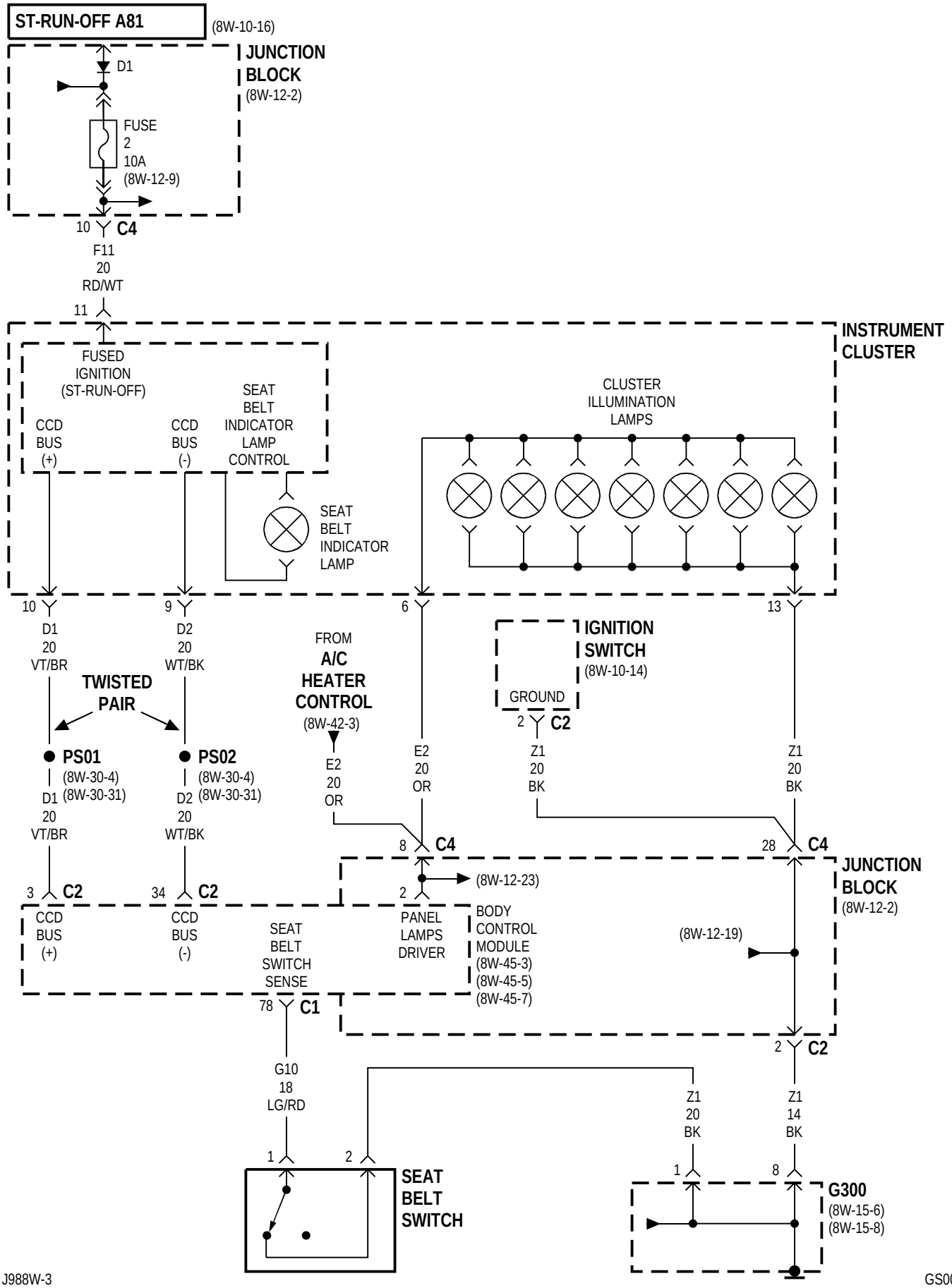
ST-RUN-OFF A81
(8W-10-16)
JUNCTION BLOCK
(8W-12-2)
D1
FUSE 2 10A
(8W-12-9)
10 C4
F11 20 RD/WT
11
INSTRUMENT CLUSTER
FUSED IGNITION (ST-RUN-OFF)
CCD BUS (+)
CCD BUS (-)
SEAT BELT INDICATOR LAMP CONTROL
SEAT BELT INDICATOR LAMP
CLUSTER ILLUMINATION LAMPS
10
D1 20 VT/BR
9
D2 20 WT/BK
6
13
TWISTED PAIR
FROM A/C HEATER CONTROL
(8W-42-3)
E2 20 OR
IGNITION SWITCH
(8W-10-14)
GROUND
2 C2
Z1 20 BK
PS01
(8W-30-4)
(8W-30-31)
PS02
(8W-30-4)
(8W-30-31)
D1 20 VT/BR
D2 20 WT/BK
8 C4
28 C4
3 C2
34 C2
2
(8W-12-23)
JUNCTION BLOCK
(8W-12-2)
CCD BUS (+)
CCD BUS (-)
SEAT BELT SWITCH SENSE
PANEL LAMPS DRIVER
BODY CONTROL MODULE
(8W-45-3)
(8W-45-5)
(8W-45-7)
(8W-12-19)
78 C1
2 C2
G10 18 LG/RD
Z1 20 BK
Z1 14 BK
1
2
1
8
SEAT BELT SWITCH
G300
(8W-15-6)
(8W-15-8)

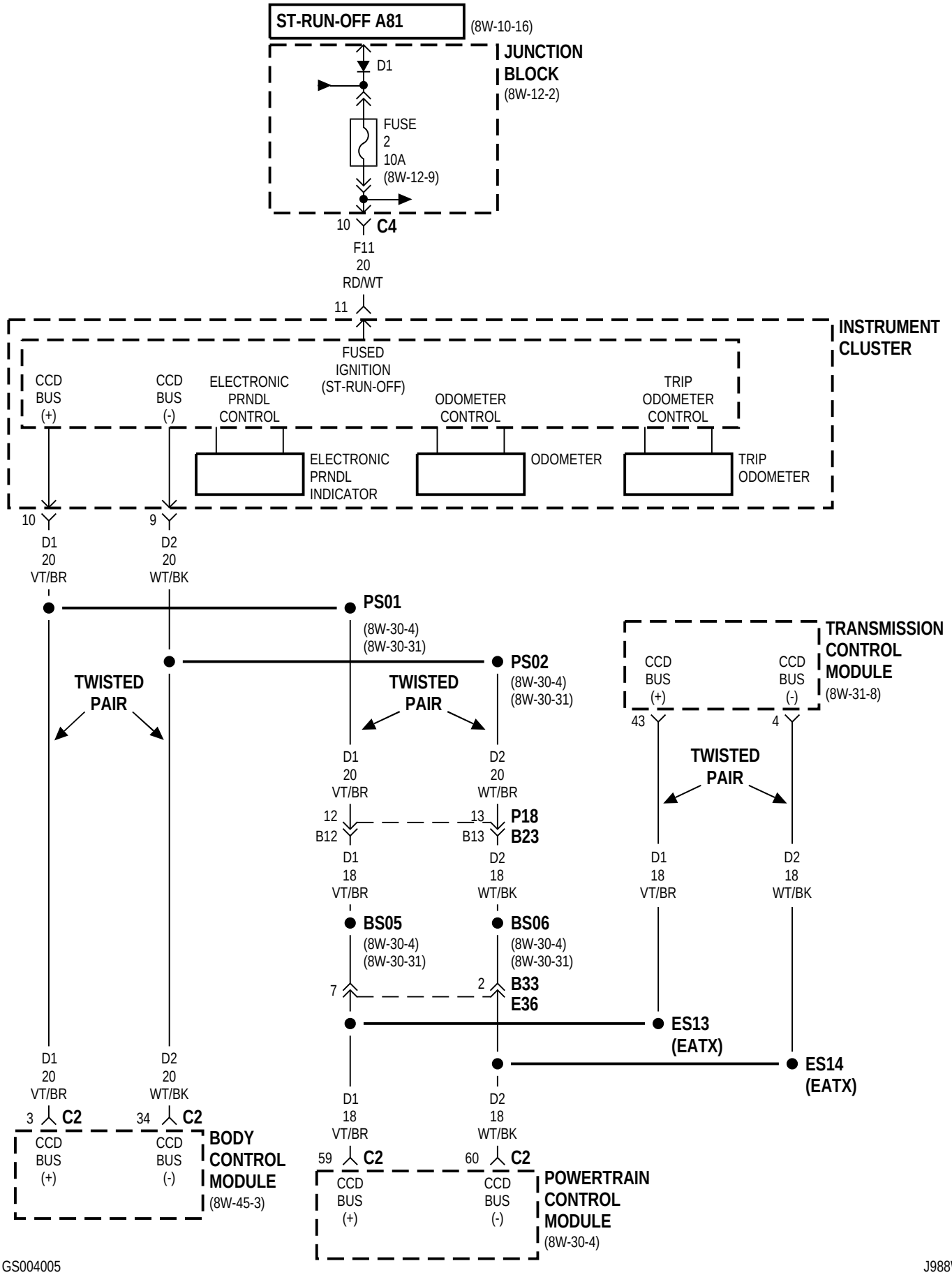
ST-RUN-OFF A81
(8W-10-16)
JUNCTION BLOCK
(8W-12-2)
D1
FUSE 2 10A
(8W-12-9)
10 C4
F11 20 RD/WT
11
INSTRUMENT CLUSTER
FUSED IGNITION (ST-RUN-OFF)
CCD BUS (+)
CCD BUS (-)
ELECTRONIC PRNDL CONTROL
ODOMETER CONTROL
TRIP ODOMETER CONTROL
ELECTRONIC PRNDL INDICATOR
ODOMETER
TRIP ODOMETER
10 D1 20 VT/BR
9 D2 20 WT/BK
PS01
(8W-30-4)
(8W-30-31)
PS02
(8W-30-4)
(8W-30-31)
TWISTED PAIR
TWISTED PAIR
TRANSMISSION CONTROL MODULE
(8W-31-8)
CCD BUS (+)
CCD BUS (-)
43
4
TWISTED PAIR
D1 20 VT/BR
D2 20 WT/BR
12 B12
13 B13
P18
B23
D1 18 VT/BR
D2 18 WT/BK
BS05
(8W-30-4)
(8W-30-31)
BS06
(8W-30-4)
(8W-30-31)
7
2
B33
E36
ES13 (EATX)
ES14 (EATX)
D1 20 VT/BR
D2 20 WT/BK
3 C2
34 C2
CCD BUS (+)
CCD BUS (-)
BODY CONTROL MODULE
(8W-45-3)
D1 18 VT/BR
D2 18 WT/BK
59 C2
60 C2
CCD BUS (+)
CCD BUS (-)
POWERTRAIN CONTROL MODULE
(8W-30-4)

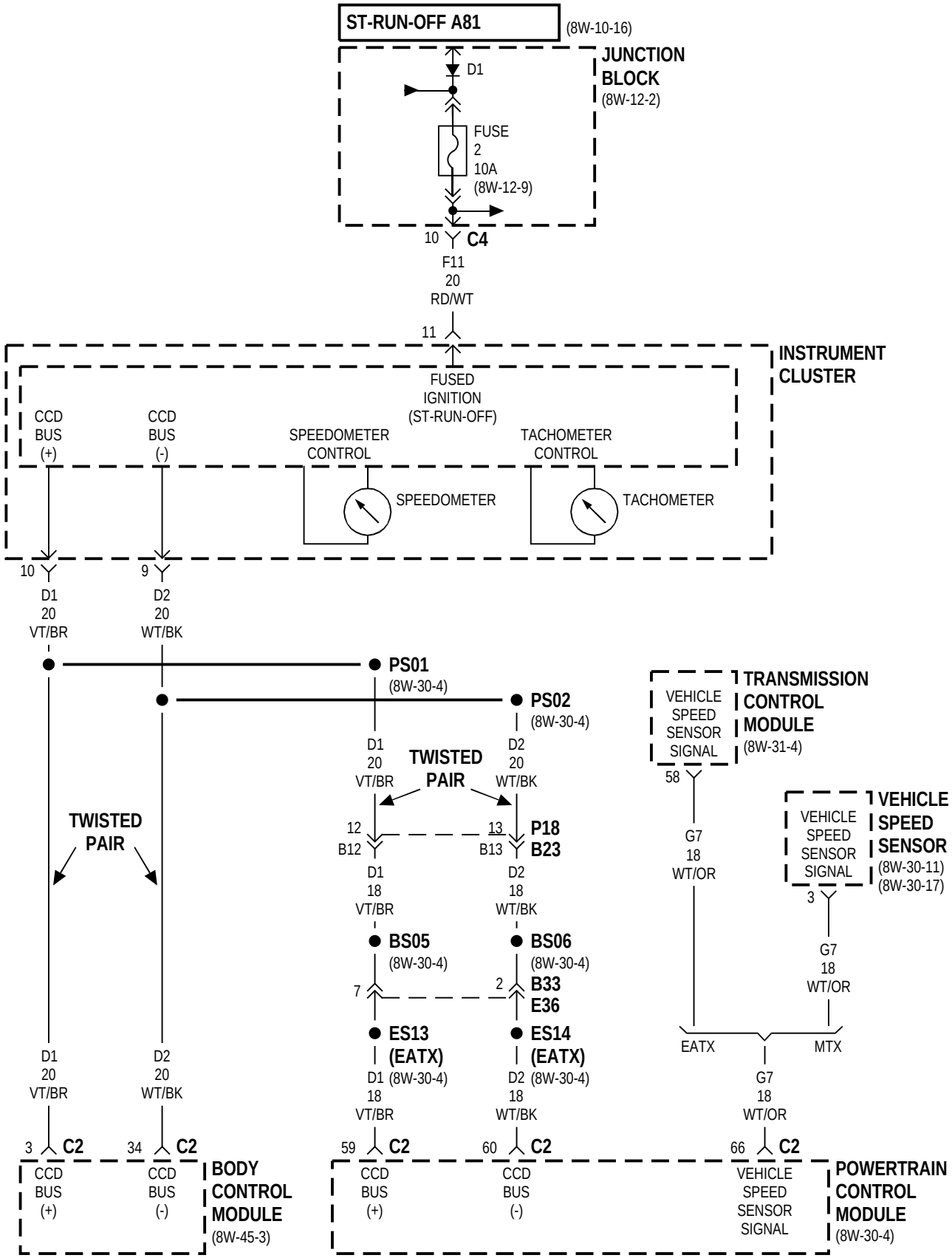
ST-RUN-OFF A81
(8W-10-16)
JUNCTION BLOCK
(8W-12-2)
D1
FUSE 2 10A
(8W-12-9)
10 C4
F11 20 RD/WT
11
INSTRUMENT CLUSTER
FUSED IGNITION (ST-RUN-OFF)
CCD BUS (+)
CCD BUS (-)
SPEEDOMETER CONTROL
TACHOMETER CONTROL
SPEEDOMETER
TACHOMETER
10
9
D1 20 VT/BR
D2 20 WT/BK
PS01
(8W-30-4)
PS02
(8W-30-4)
TWISTED PAIR
TWISTED PAIR
12 B12
13 B13
P18 B23
D1 18 VT/BR
D2 18 WT/BK
BS05
(8W-30-4)
BS06
(8W-30-4)
7
2
B33 E36
ES13 (EATX)
ES14 (EATX)
D1 (8W-30-4)
D2 (8W-30-4)
TRANSMISSION CONTROL MODULE
(8W-31-4)
VEHICLE SPEED SENSOR SIGNAL
58
G7 18 WT/OR
VEHICLE SPEED SENSOR
(8W-30-11)
(8W-30-17)
3
G7 18 WT/OR
EATX
MTX
G7 18 WT/OR
3 C2
34 C2
59 C2
60 C2
66 C2
CCD BUS (+)
CCD BUS (-)
BODY CONTROL MODULE
(8W-45-3)
VEHICLE SPEED SENSOR SIGNAL
POWERTRAIN CONTROL MODULE
(8W-30-4)

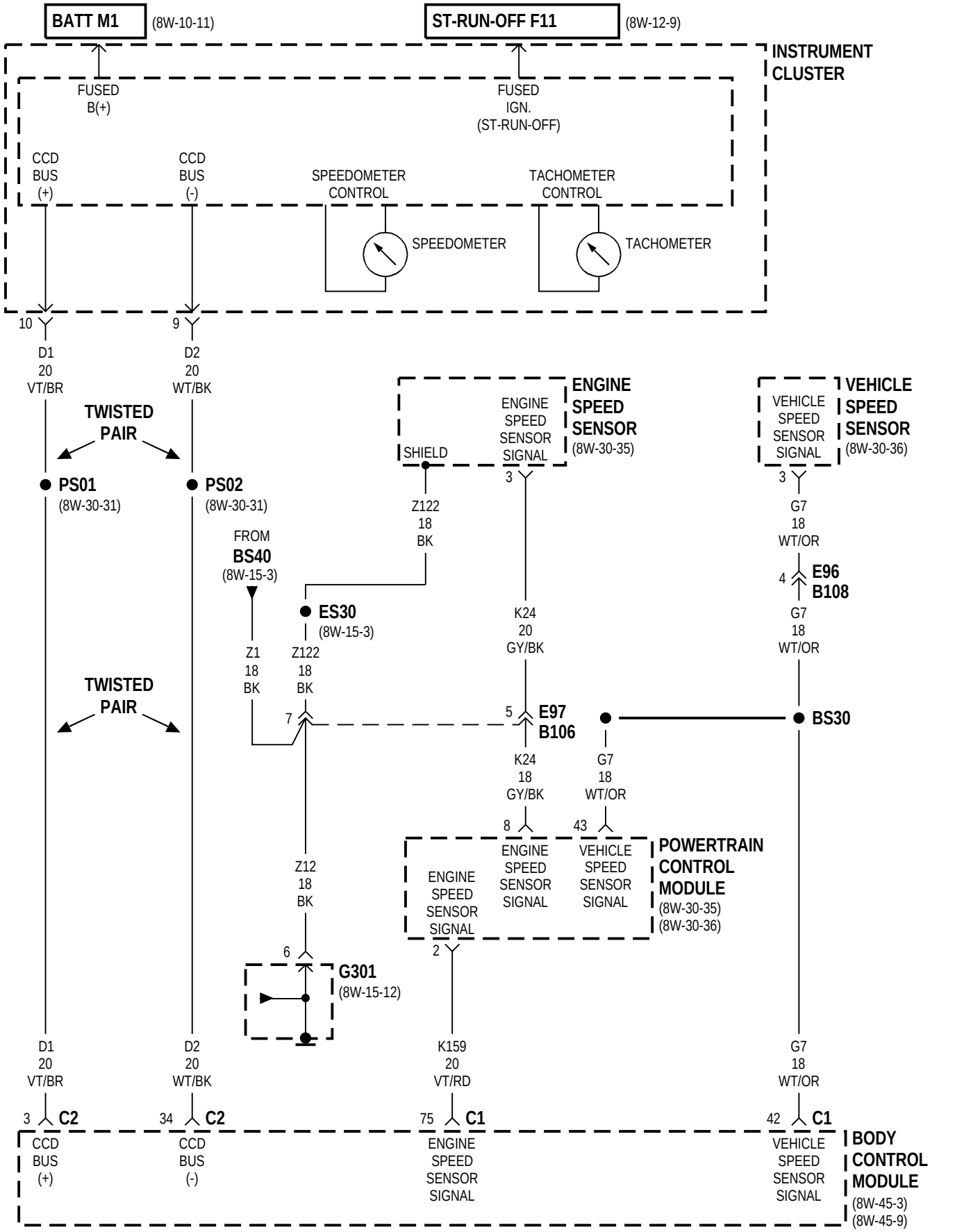
BATT M1
(8W-10-11)
ST-RUN-OFF F11
(8W-12-9)
INSTRUMENT CLUSTER
FUSED B(+)
FUSED IGN. (ST-RUN-OFF)
CCD BUS (+)
CCD BUS (-)
SPEEDOMETER CONTROL
TACHOMETER CONTROL
SPEEDOMETER
TACHOMETER
10
9
D1 20 VT/BR
D2 20 WT/BK
TWISTED PAIR
PS01
(8W-30-31)
PS02
(8W-30-31)
ENGINE SPEED SENSOR
(8W-30-35)
SHIELD
ENGINE SPEED SENSOR SIGNAL
3
Z122 18 BK
VEHICLE SPEED SENSOR
(8W-30-36)
VEHICLE SPEED SENSOR SIGNAL
3
G7 18 WT/OR
4
E96
B108
G7 18 WT/OR
FROM BS40
(8W-15-3)
ES30
(8W-15-3)
Z1 18 BK
Z122 18 BK
K24 20 GY/BK
7
5
E97
B106
BS30
K24 18 GY/BK
G7 18 WT/OR
8
43
POWERTRAIN CONTROL MODULE
(8W-30-35)
(8W-30-36)
ENGINE SPEED SENSOR SIGNAL
ENGINE SPEED SENSOR SIGNAL
VEHICLE SPEED SENSOR SIGNAL
Z12 18 BK
6
G301
(8W-15-12)
2
D1 20 VT/BR
D2 20 WT/BK
K159 20 VT/RD
G7 18 WT/OR
3
C2
34
C2
75
C1
42
C1
CCD BUS (+)
CCD BUS (-)
ENGINE SPEED SENSOR SIGNAL
VEHICLE SPEED SENSOR SIGNAL
BODY CONTROL MODULE
(8W-45-3)
(8W-45-9)

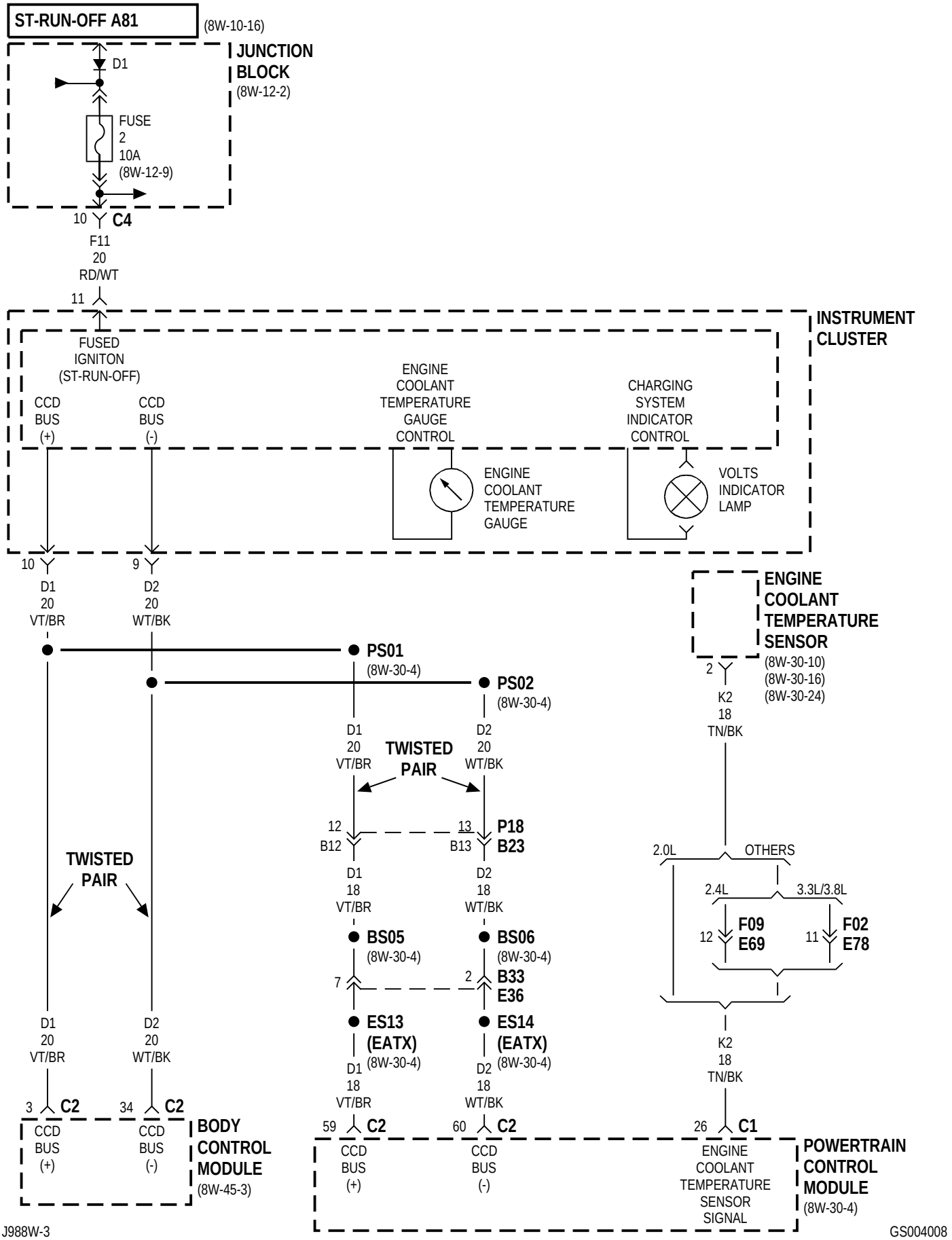

J988W-3

GS004008

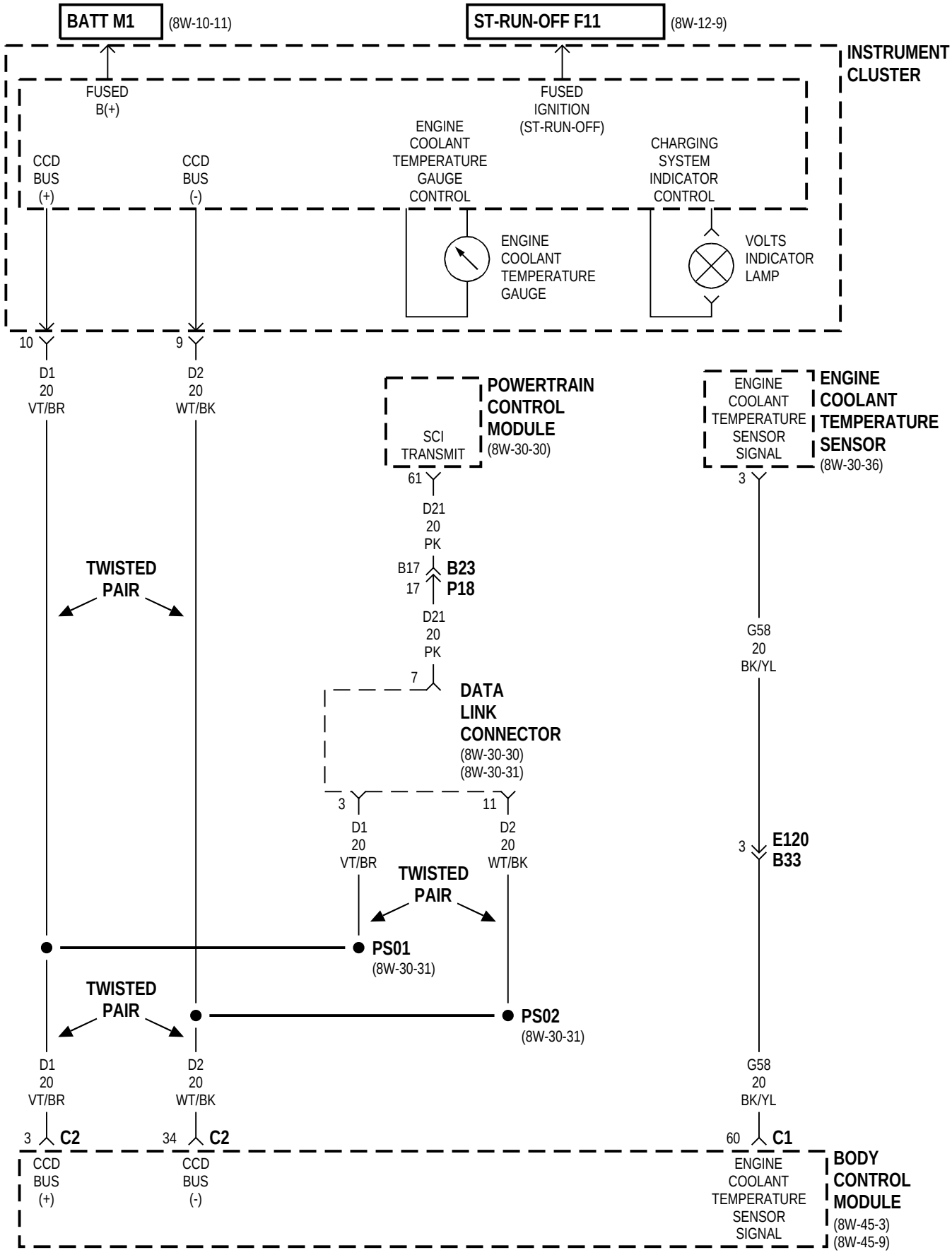
BATT M1
(8W-10-11)
ST-RUN-OFF F11
(8W-12-9)
INSTRUMENT CLUSTER
FUSED B(+)
FUSED IGNITION (ST-RUN-OFF)
CCD BUS (+)
CCD BUS (-)
ENGINE COOLANT TEMPERATURE GAUGE CONTROL
CHARGING SYSTEM INDICATOR CONTROL
ENGINE COOLANT TEMPERATURE GAUGE
VOLTS INDICATOR LAMP
10
9
D1 20 VT/BR
D2 20 WT/BK
POWERTRAIN CONTROL MODULE
(8W-30-30)
SCI TRANSMIT
61
D21 20 PK
B17
B23
17
P18
D21 20 PK
7
DATA LINK CONNECTOR
(8W-30-30)
(8W-30-31)
3
11
D1 20 VT/BR
D2 20 WT/BK
TWISTED PAIR
TWISTED PAIR
TWISTED PAIR
PS01
(8W-30-31)
PS02
(8W-30-31)
ENGINE COOLANT TEMPERATURE SENSOR SIGNAL
ENGINE COOLANT TEMPERATURE SENSOR
(8W-30-36)
3
G58 20 BK/YL
3
E120
B33
G58 20 BK/YL
D1 20 VT/BR
D2 20 WT/BK
3
C2
34
C2
60
C1
CCD BUS (+)
CCD BUS (-)
ENGINE COOLANT TEMPERATURE SENSOR SIGNAL
BODY CONTROL MODULE
(8W-45-3)
(8W-45-9)

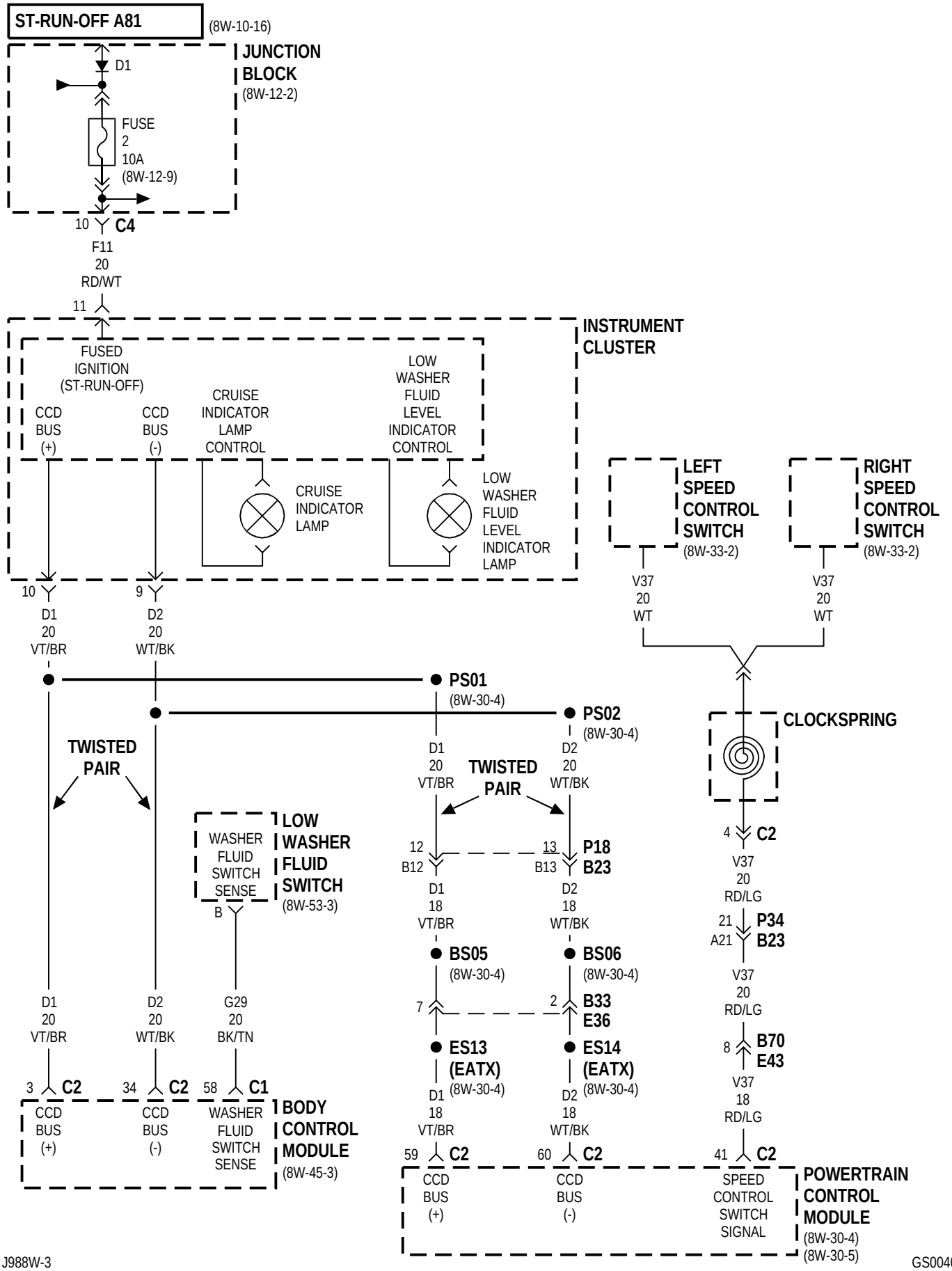
ST-RUN-OFF A81
(8W-10-16)
JUNCTION BLOCK
(8W-12-2)
D1
FUSE 2 10A
(8W-12-9)
10 C4
F11 20 RD/WT
11
INSTRUMENT CLUSTER
FUSED IGNITION (ST-RUN-OFF)
CCD BUS (+)
CCD BUS (-)
CRUISE INDICATOR LAMP CONTROL
LOW WASHER FLUID LEVEL INDICATOR CONTROL
CRUISE INDICATOR LAMP
LOW WASHER FLUID LEVEL INDICATOR LAMP
LEFT SPEED CONTROL SWITCH
(8W-33-2)
RIGHT SPEED CONTROL SWITCH
(8W-33-2)
V37 20 WT
V37 20 WT
10 D1 20 VT/BR
9 D2 20 WT/BK
PS01
(8W-30-4)
PS02
(8W-30-4)
CLOCKSPRING
TWISTED PAIR
TWISTED PAIR
D1 20 VT/BR
D2 20 WT/BK
4 C2
V37 20 RD/LG
21 P34
A21 B23
V37 20 RD/LG
8 B70
E43
V37 18 RD/LG
LOW WASHER FLUID SWITCH
(8W-53-3)
WASHER FLUID SWITCH SENSE
B
12 B12 P18 B23 13
D1 18 VT/BR
D2 18 WT/BK
BS05
(8W-30-4)
BS06
(8W-30-4)
7 B33 E36 2
ES13 (EATX)
(8W-30-4)
ES14 (EATX)
(8W-30-4)
D1 18 VT/BR
D2 18 WT/BK
59 C2
60 C2
41 C2
D1 20 VT/BR
D2 20 WT/BK
G29 20 BK/TN
3 C2
34 C2
58 C1
BODY CONTROL MODULE
(8W-45-3)
CCD BUS (+)
CCD BUS (-)
WASHER FLUID SWITCH SENSE
CCD BUS (+)
CCD BUS (-)
SPEED CONTROL SWITCH SIGNAL
POWERTRAIN CONTROL MODULE
(8W-30-4)
(8W-30-5)

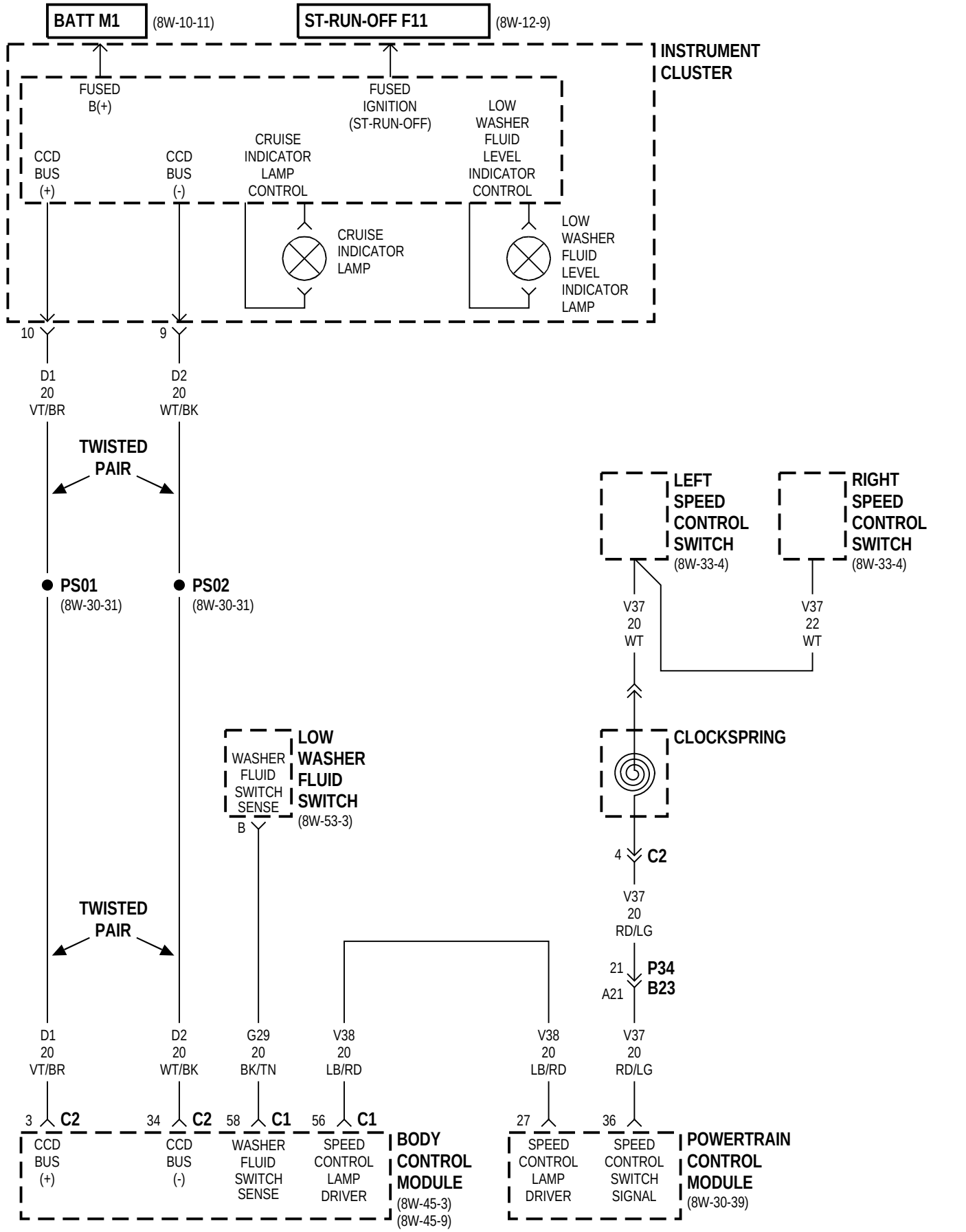
BATT M1
(8W-10-11)
ST-RUN-OFF F11
(8W-12-9)
INSTRUMENT CLUSTER
FUSED B(+)
FUSED IGNITION (ST-RUN-OFF)
CCD BUS (+)
CCD BUS (-)
CRUISE INDICATOR LAMP CONTROL
LOW WASHER FLUID LEVEL INDICATOR CONTROL
CRUISE INDICATOR LAMP
LOW WASHER FLUID LEVEL INDICATOR LAMP
10
9
D1 20 VT/BR
D2 20 WT/BK
TWISTED PAIR
PS01
(8W-30-31)
PS02
(8W-30-31)
LEFT SPEED CONTROL SWITCH
(8W-33-4)
RIGHT SPEED CONTROL SWITCH
(8W-33-4)
V37 20 WT
V37 22 WT
CLOCKSPRING
WASHER FLUID SWITCH SENSE
B
LOW WASHER FLUID SWITCH
(8W-53-3)
4
C2
V37 20 RD/LG
21
A21
P34
B23
TWISTED PAIR
D1 20 VT/BR
D2 20 WT/BK
G29 20 BK/TN
V38 20 LB/RD
V38 20 LB/RD
V37 20 RD/LG
3
C2
34
C2
58
C1
56
C1
27
36
CCD BUS (+)
CCD BUS (-)
WASHER FLUID SWITCH SENSE
SPEED CONTROL LAMP DRIVER
BODY CONTROL MODULE
(8W-45-3)
(8W-45-9)
SPEED CONTROL LAMP DRIVER
SPEED CONTROL SWITCH SIGNAL
POWERTRAIN CONTROL MODULE
(8W-30-39)

8W-41 HORN/CIGAR LIGHTER/POWER OUTLET

Component	Page
A/C Heater Control	8W-41-3
Body Control Module	8W-41-2
BS19	8W-41-2
Cigar/Accessory Relay	8W-41-3
Clockspring	8W-41-2
Front Cigar Lighter/Power Outlet	8W-41-3
Fuse 8 (PDC)	8W-41-3
Fuse 9 (PDC)	8W-41-2
G200	8W-41-3
G300	8W-41-3
G301	8W-41-2
G302	8W-41-3
High Note Horn	8W-41-2
Horn Relay	8W-41-2
Horn Switch	8W-41-2
Junction Block	8W-41-2, 3
Low Note Horn	8W-41-2
Power Distribution Center	8W-41-2, 3
PTC 7 (JB)	8W-41-3
Rear Cigar Lighter/Power Outlet	8W-41-3

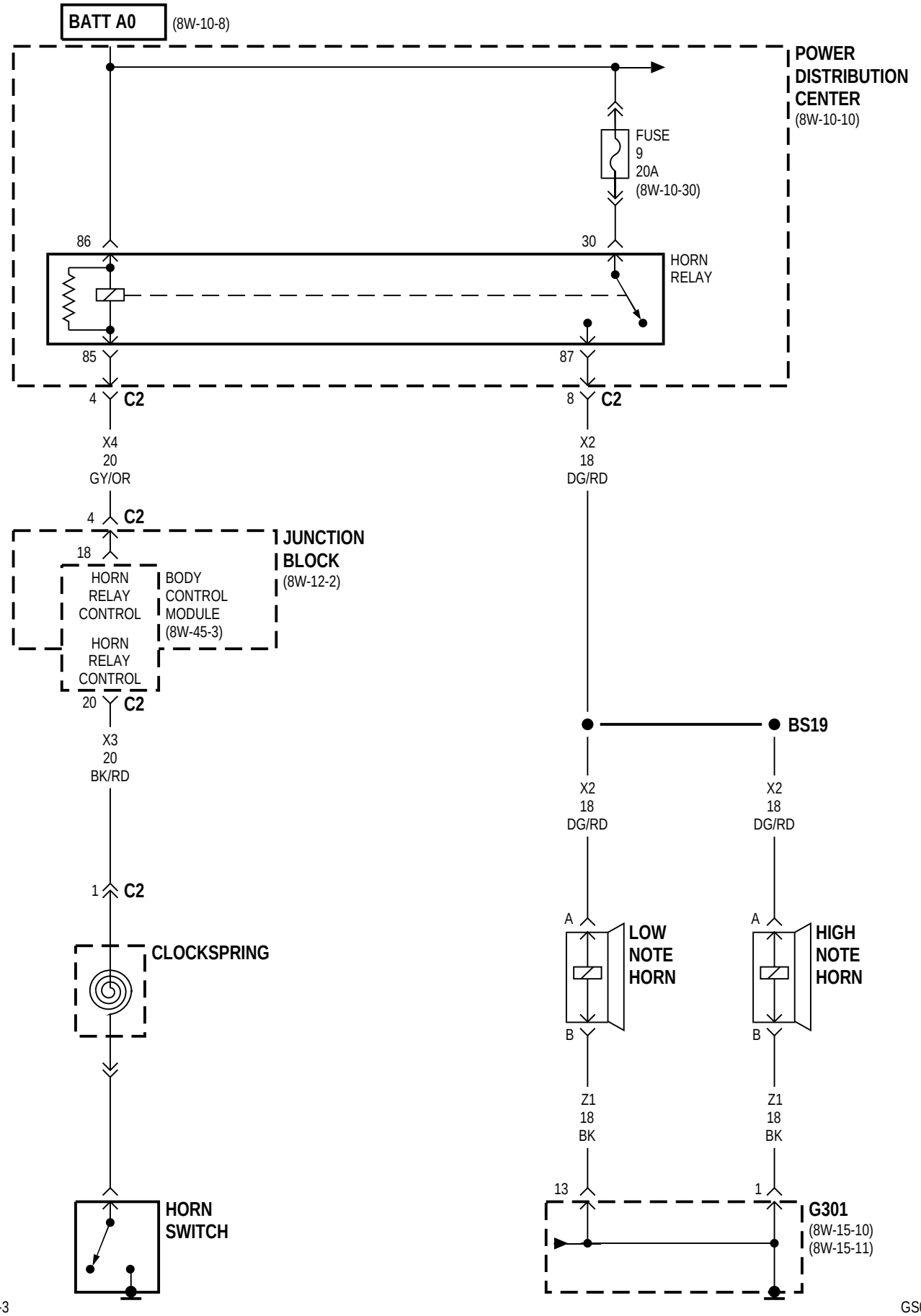
BATT A0
(8W-10-8)
POWER DISTRIBUTION CENTER
(8W-10-10)
FUSE 9 20A
(8W-10-30)
86
30
HORN RELAY
85
87
4
C2
8
C2
X4 20 GY/OR
X2 18 DG/RD
4
C2
JUNCTION BLOCK
(8W-12-2)
18
HORN RELAY CONTROL
BODY CONTROL MODULE
(8W-45-3)
HORN RELAY CONTROL
20
C2
X3 20 BK/RD
BS19
X2 18 DG/RD
X2 18 DG/RD
1
C2
A
LOW NOTE HORN
A
HIGH NOTE HORN
CLOCKSPRING
B
B
Z1 18 BK
Z1 18 BK
13
1
HORN SWITCH
G301
(8W-15-10)
(8W-15-11)

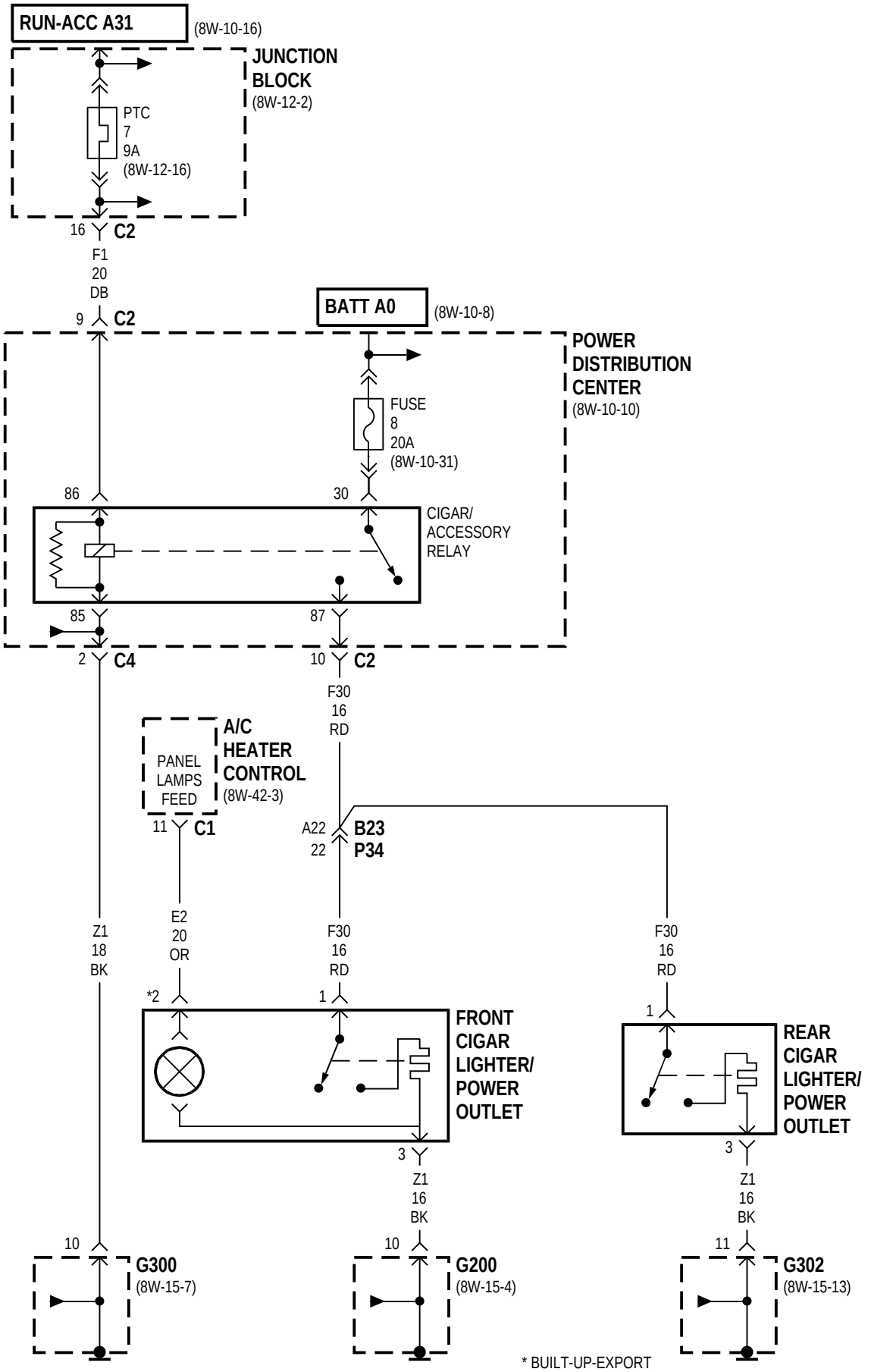

* BUILT-UP-EXPORT

8W-42 AIR CONDITIONING-HEATER

Component	Page
A/C Compressor Clutch	8W-42-7, 9
A/C Compressor Clutch Relay	8W-42-7, 9
A/C Heater Control	8W-42-2, 3, 4, 5, 6
A/C On Indicator	8W-42-4
A/C Pressure Transducer	8W-42-7, 9
A/C Switch	8W-42-4
A/C Zone Door Actuator	8W-42-5
Battery	8W-42-9
Blend Door Actuator	8W-42-5
Body Control Module	8W-42-3, 6
BS17	8W-42-6
BS34	8W-42-9
Diesel Power Relay	8W-42-9
Driver's Side Radiator Fan	8W-42-10
Electric Wiper De-Icer	8W-42-3
ES01	8W-42-9
ES02	8W-42-7, 9
ES03	8W-42-7
ES06	8W-42-9
ES07	8W-42-7, 10
ES09	8W-42-10
ES12	8W-42-10
ES21	8W-42-7
ES23	8W-42-7, 8
ES29	8W-42-9, 10
Evaporator Temperature Sensor	8W-42-5
Front Blower Motor	8W-42-2
Front Blower Motor Relay	8W-42-2
Front Blower Motor Resistor Block	8W-42-2
Front Cigar Lighter/Power Outlet	8W-42-3
FS01	8W-42-7
Fuse 6 (JB)	8W-42-4
Fuse 11 (JB)	8W-42-6
Fuse 11 (PDC)	8W-42-7, 9
Fuse 12 (JB)	8W-42-2
Fuse 17 (PDC)	8W-42-9
Fuse 21 (PDC)	8W-42-2
Fuse 24 (PDC)	8W-42-8, 10
G100	8W-42-9
G102	8W-42-7, 8, 10
G103	8W-42-9
G200	8W-42-3, 4
G201	8W-42-2, 3, 6
G300	8W-42-2
G302	8W-42-6
HVAC Control	8W-42-2, 3, 4, 5
Illumination Lamp	8W-42-3
Instrument Cluster	8W-42-3
JS01b	8W-42-5
JS02b	8W-42-5
JS03	8W-42-5
Junction Block	8W-42-2, 3, 4, 6, 7
Message Center	8W-42-4
Mode Door Actuator	8W-42-5
Passenger's Side Radiator Fan	8W-42-10
Power Distribution Center	8W-42-2, 7, 8, 9, 10
Powertrain Control Module	8W-42-3, 7, 8, 9, 10
PTC 1 (JB)	8W-42-7
Radiator Fan Disconnect	8W-42-10
Radiator Fan No. 1	8W-42-8
Radiator Fan No. 2	8W-42-8
Radiator Fan Relay	8W-42-8
Radiator Fan Relay No. 1	8W-42-10
Radiator Fan Relay No. 2	8W-42-10
Radiator Fan Relay No. 3	8W-42-10
Rear A/C Heater Unit	8W-42-6
Rear Blower Front Control Switch	8W-42-2, 3, 6
Rear Blower Rear Control Switch	8W-42-6
Rear Defogger On Indicator	8W-42-4
Rear Washer Switch	8W-42-3
Rear Window Defogger Relay	8W-42-4
Rear Window Defogger Switch	8W-42-4
Rear Wiper Delay On Indicator	8W-42-3
Rear Wiper Delay Switch	8W-42-3
Rear Wiper On Indicator	8W-42-3
Rear Wiper On Switch	8W-42-3
Recirculate Mode Indicator	8W-42-4
Recirculate Mode Switch	8W-42-4
Recirculation Door Actuator	8W-42-5
RF3 E40	8W-42-8
RFS1	8W-42-8
RFS2	8W-42-8

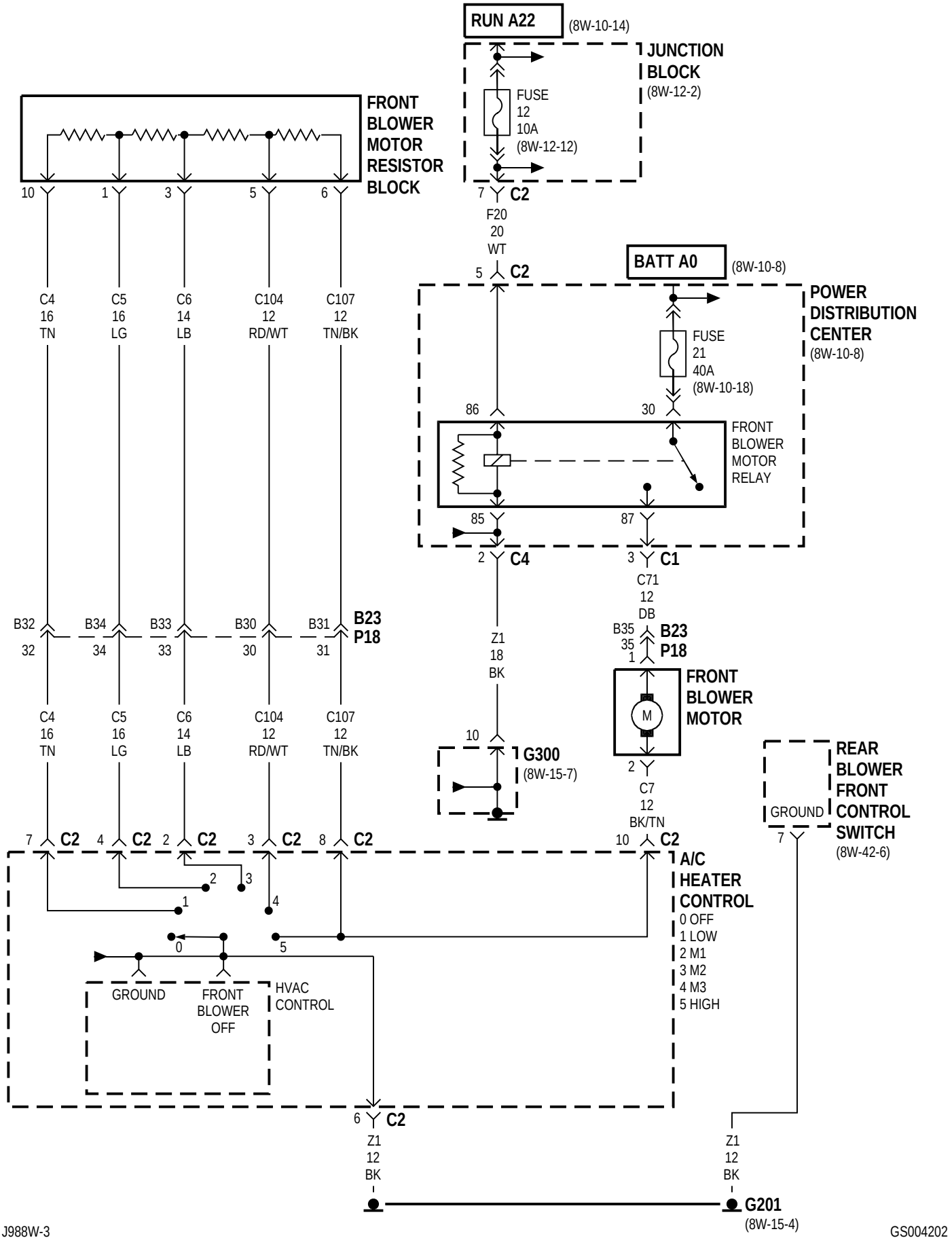
RUN A22
(8W-10-14)
JUNCTION BLOCK
(8W-12-2)
FUSE 12 10A
(8W-12-12)
7 C2
F20 20 WT
5 C2
BATT A0
(8W-10-8)
POWER DISTRIBUTION CENTER
(8W-10-8)
FUSE 21 40A
(8W-10-18)
86
30
FRONT BLOWER MOTOR RELAY
85
87
2 C4
3 C1
C71 12 DB
FRONT BLOWER MOTOR RESISTOR BLOCK
10
1
3
5
6
C4 16 TN
C5 16 LG
C6 14 LB
C104 12 RD/WT
C107 12 TN/BK
B32
B34
B33
B30
B31
B23 P18
32
34
33
30
31
Z1 18 BK
B35
35
1
B23 P18
FRONT BLOWER MOTOR
M
2
C7 12 BK/TN
10
G300
(8W-15-7)
REAR BLOWER FRONT CONTROL SWITCH
(8W-42-6)
GROUND
7
7 C2
4 C2
2 C2
3 C2
8 C2
10 C2
A/C HEATER CONTROL
0 OFF
1 LOW
2 M1
3 M2
4 M3
5 HIGH
GROUND
FRONT BLOWER OFF
HVAC CONTROL
6 C2
Z1 12 BK
Z1 12 BK
G201
(8W-15-4)

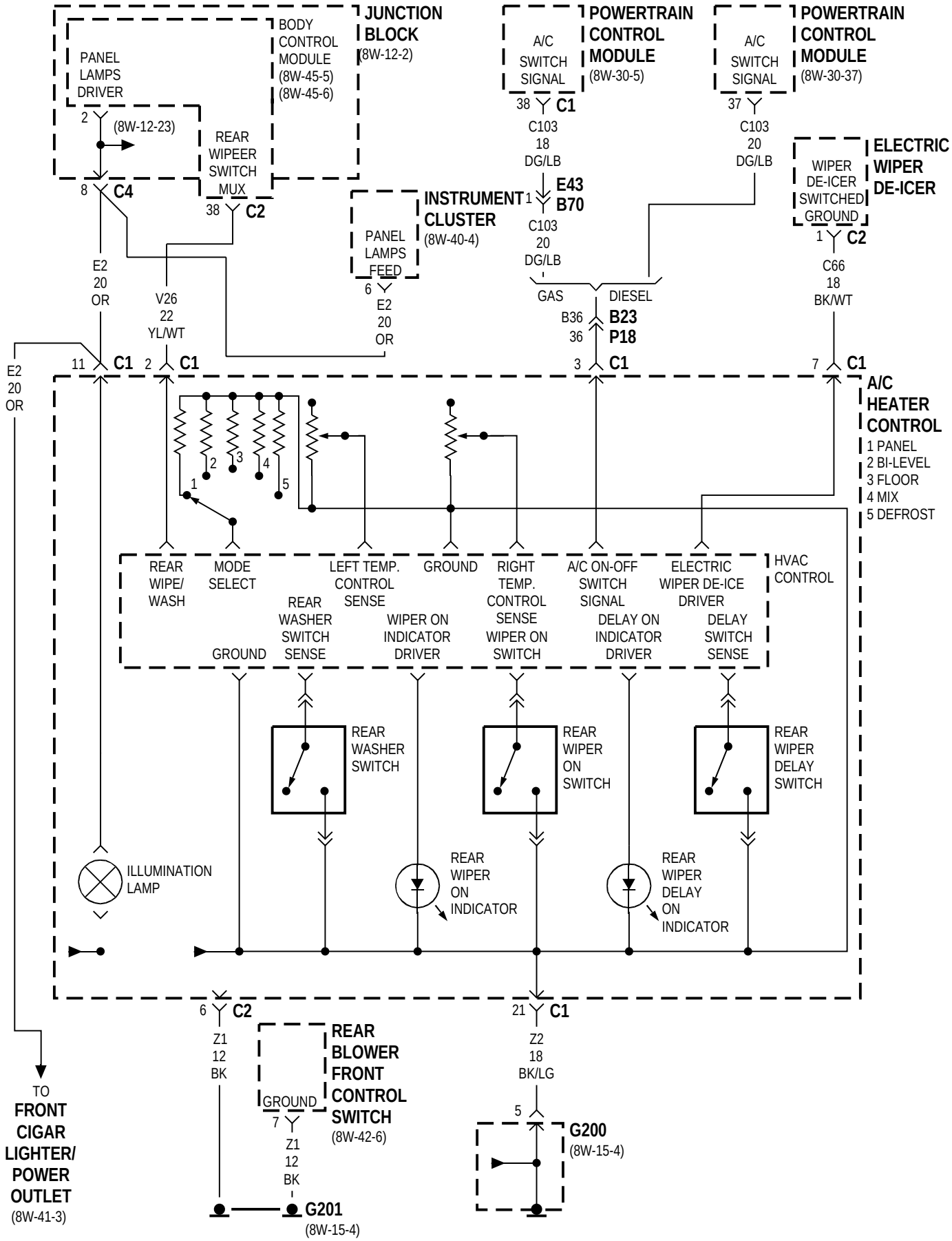
JUNCTION BLOCK (8W-12-2)
BODY CONTROL MODULE (8W-45-5) (8W-45-6)
PANEL LAMPS DRIVER
REAR WIPEER SWITCH MUX
(8W-12-23)
C4
C2
POWERTRAIN CONTROL MODULE (8W-30-5)
A/C SWITCH SIGNAL
C1
C103 18 DG/LB
POWERTRAIN CONTROL MODULE (8W-30-37)
C103 20 DG/LB
ELECTRIC WIPER DE-ICER
WIPER DE-ICER SWITCHED GROUND
INSTRUMENT CLUSTER (8W-40-4)
PANEL LAMPS FEED
E43
B70
GAS
DIESEL
B36
B23
P18
C66 18 BK/WT
E2 20 OR
V26 22 YL/WT
A/C HEATER CONTROL
1 PANEL
2 BI-LEVEL
3 FLOOR
4 MIX
5 DEFROST
REAR WIPE/ WASH
MODE SELECT
LEFT TEMP. CONTROL SENSE
GROUND
RIGHT TEMP. CONTROL SENSE
A/C ON-OFF SWITCH SIGNAL
ELECTRIC WIPER DE-ICE DRIVER
HVAC CONTROL
REAR WASHER SWITCH SENSE
WIPER ON INDICATOR DRIVER
WIPER ON SWITCH
DELAY ON INDICATOR DRIVER
DELAY SWITCH SENSE
REAR WASHER SWITCH
REAR WIPER ON SWITCH
REAR WIPER DELAY SWITCH
ILLUMINATION LAMP
REAR WIPER ON INDICATOR
REAR WIPER DELAY ON INDICATOR
Z1 12 BK
Z2 18 BK/LG
REAR BLOWER FRONT CONTROL SWITCH (8W-42-6)
G200 (8W-15-4)
G201 (8W-15-4)
TO FRONT CIGAR LIGHTER/ POWER OUTLET (8W-41-3)

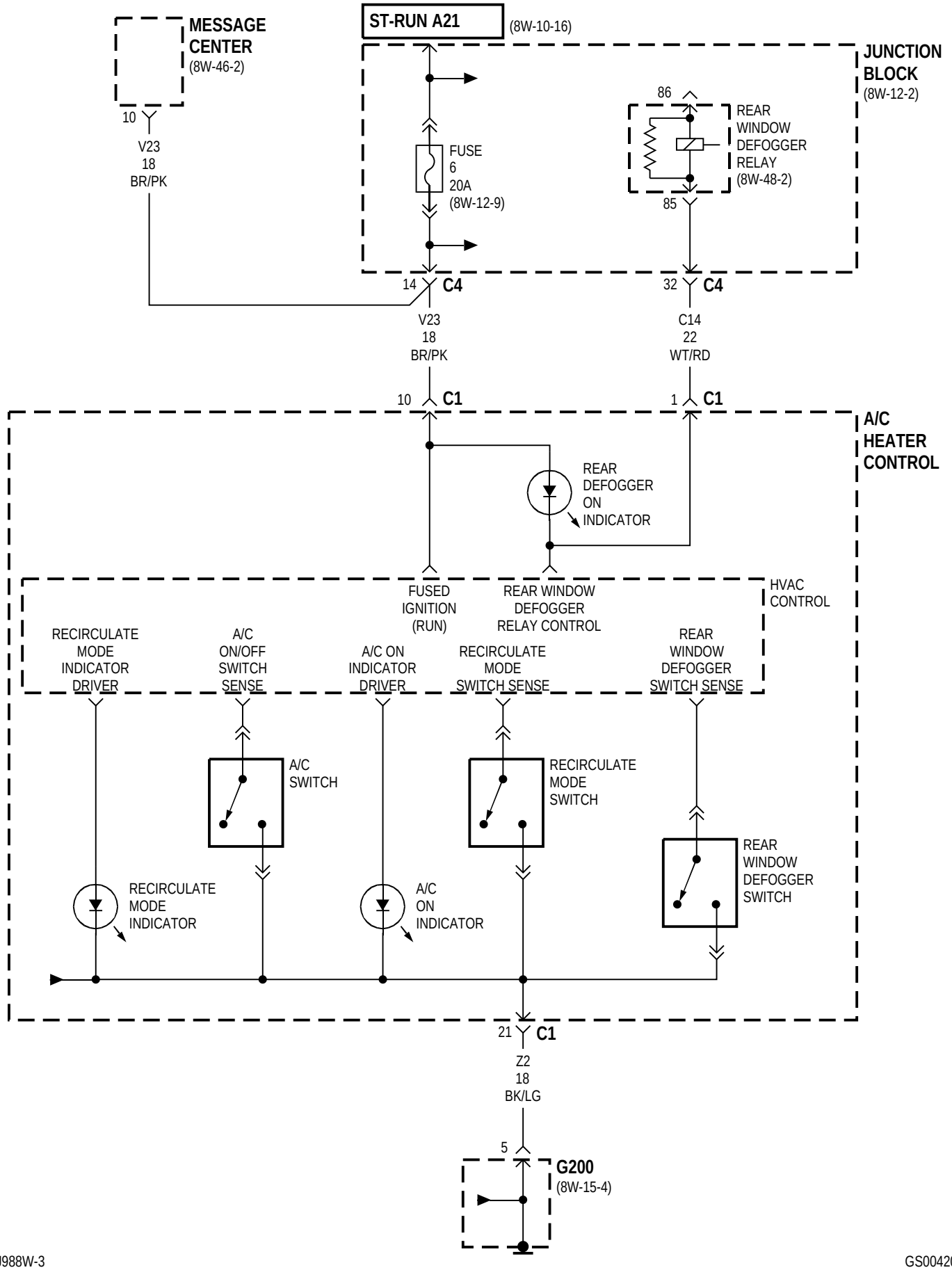
MESSAGE CENTER
(8W-46-2)
10
V23
18
BR/PK
ST-RUN A21
(8W-10-16)
JUNCTION BLOCK
(8W-12-2)
FUSE
6
20A
(8W-12-9)
86
REAR WINDOW DEFOGGER RELAY
(8W-48-2)
85
14 C4
32 C4
V23
18
BR/PK
C14
22
WT/RD
10 C1
1 C1
A/C HEATER CONTROL
REAR DEFOGGER ON INDICATOR
HVAC CONTROL
FUSED IGNITION (RUN)
REAR WINDOW DEFOGGER RELAY CONTROL
RECIRCULATE MODE INDICATOR DRIVER
A/C ON/OFF SWITCH SENSE
A/C ON INDICATOR DRIVER
RECIRCULATE MODE SWITCH SENSE
REAR WINDOW DEFOGGER SWITCH SENSE
A/C SWITCH
RECIRCULATE MODE SWITCH
REAR WINDOW DEFOGGER SWITCH
RECIRCULATE MODE INDICATOR
A/C ON INDICATOR
21 C1
Z2
18
BK/LG
5
G200
(8W-15-4)

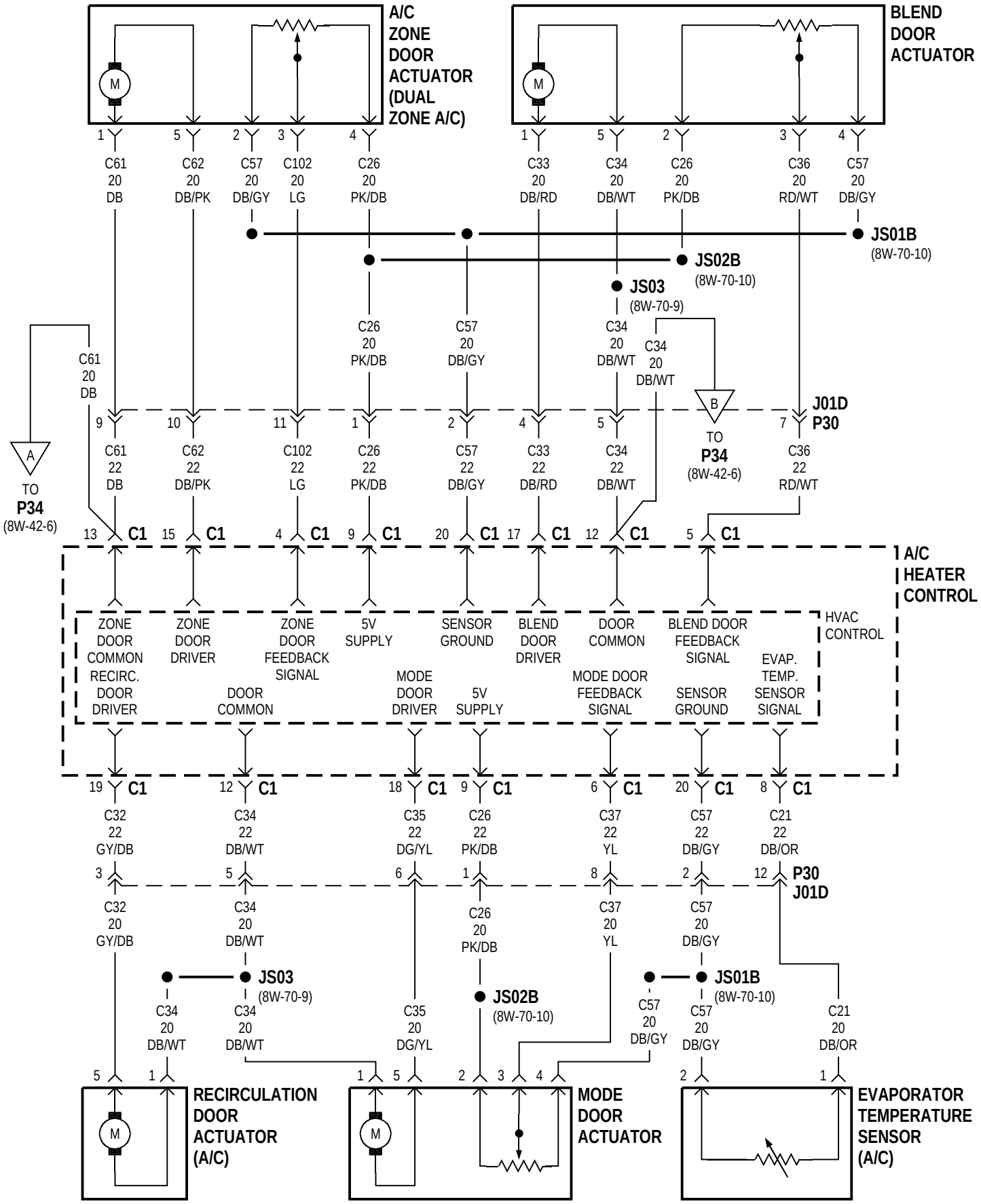
A/C ZONE DOOR ACTUATOR (DUAL ZONE A/C)
BLEND DOOR ACTUATOR
C61 20 DB
C62 20 DB/PK
C57 20 DB/GY
C102 20 LG
C26 20 PK/DB
C33 20 DB/RD
C34 20 DB/WT
C26 20 PK/DB
C36 20 RD/WT
C57 20 DB/GY
JS01B (8W-70-10)
JS02B (8W-70-10)
JS03 (8W-70-9)
C34 20 DB/WT
B
TO P34 (8W-42-6)
J01D P30
A
TO P34 (8W-42-6)
C61 22 DB
C62 22 DB/PK
C102 22 LG
C26 22 PK/DB
C57 22 DB/GY
C33 22 DB/RD
C34 22 DB/WT
C36 22 RD/WT
A/C HEATER CONTROL
HVAC CONTROL
ZONE DOOR COMMON
ZONE DOOR DRIVER
ZONE DOOR FEEDBACK SIGNAL
5V SUPPLY
SENSOR GROUND
BLEND DOOR DRIVER
DOOR COMMON
BLEND DOOR FEEDBACK SIGNAL
RECIRC. DOOR DRIVER
DOOR COMMON
MODE DOOR DRIVER
5V SUPPLY
MODE DOOR FEEDBACK SIGNAL
SENSOR GROUND
EVAP. TEMP. SENSOR SIGNAL
C32 22 GY/DB
C34 22 DB/WT
C35 22 DG/YL
C26 22 PK/DB
C37 22 YL
C57 22 DB/GY
C21 22 DB/OR
P30 J01D
C32 20 GY/DB
C34 20 DB/WT
C26 20 PK/DB
C37 20 YL
C57 20 DB/GY
JS03 (8W-70-9)
JS02B (8W-70-10)
JS01B (8W-70-10)
C34 20 DB/WT
C34 20 DB/WT
C35 20 DG/YL
C57 20 DB/GY
C57 20 DB/GY
C21 20 DB/OR
RECIRCULATION DOOR ACTUATOR (A/C)
MODE DOOR ACTUATOR
EVAPORATOR TEMPERATURE SENSOR (A/C)

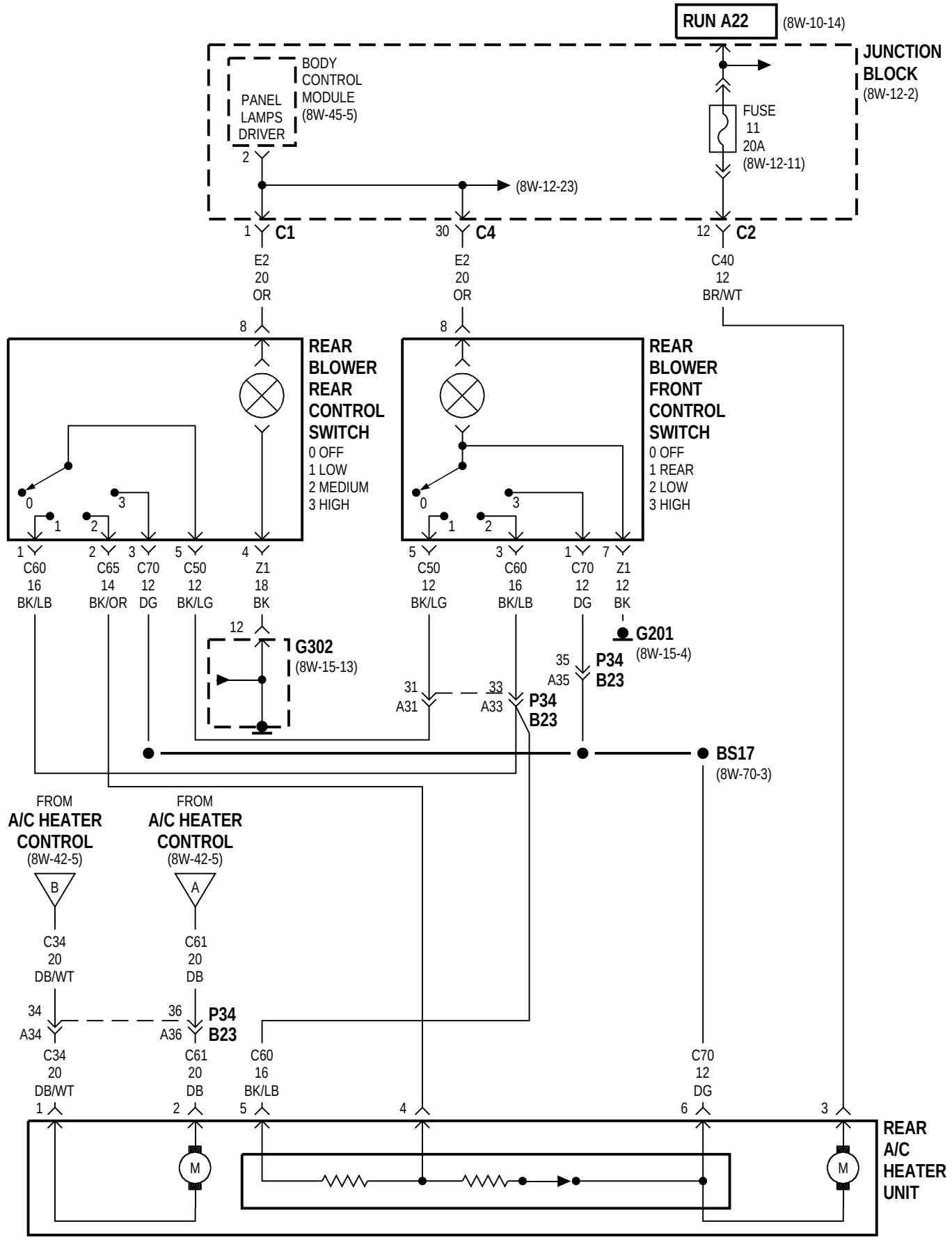
RUN A22
(8W-10-14)
JUNCTION BLOCK
(8W-12-2)
BODY CONTROL MODULE
(8W-45-5)
PANEL LAMPS DRIVER
FUSE 11 20A
(8W-12-11)
(8W-12-23)
C1
C4
C2
E2 20 OR
C40 12 BR/WT
REAR BLOWER REAR CONTROL SWITCH
0 OFF
1 LOW
2 MEDIUM
3 HIGH
REAR BLOWER FRONT CONTROL SWITCH
0 OFF
1 REAR
2 LOW
3 HIGH
C60 16 BK/LB
C65 14 BK/OR
C70 12 DG
C50 12 BK/LG
Z1 18 BK
Z1 12 BK
G302
(8W-15-13)
G201
(8W-15-4)
P34
B23
BS17
(8W-70-3)
FROM A/C HEATER CONTROL
(8W-42-5)
C34 20 DB/WT
C61 20 DB
REAR A/C HEATER UNIT
M

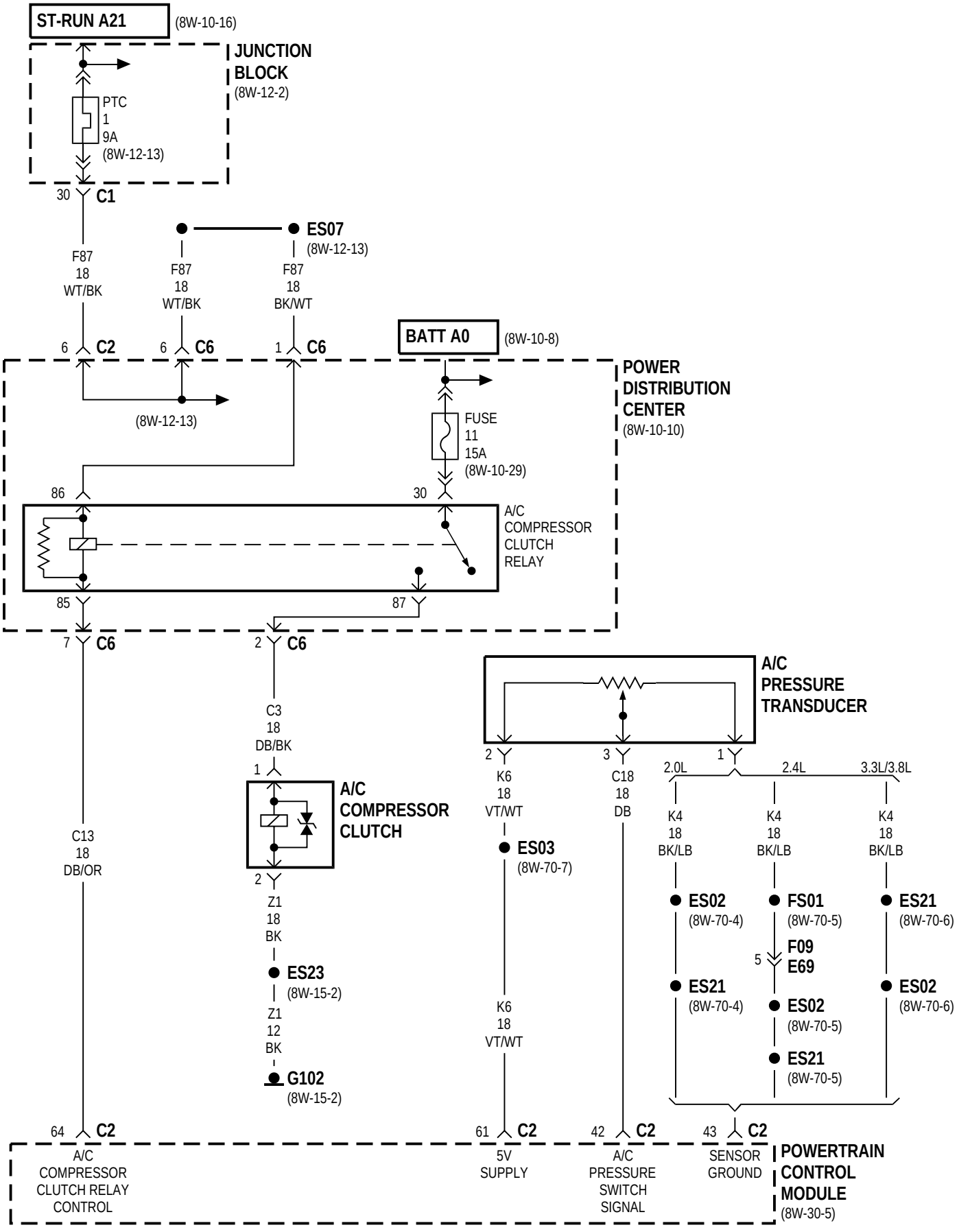
ST-RUN A21
(8W-10-16)
JUNCTION BLOCK
(8W-12-2)
PTC
1
9A
(8W-12-13)
30
C1
F87
18
WT/BK
F87
18
WT/BK
ES07
(8W-12-13)
F87
18
BK/WT
6
C2
6
C6
1
C6
BATT A0
(8W-10-8)
POWER DISTRIBUTION CENTER
(8W-10-10)
(8W-12-13)
FUSE
11
15A
(8W-10-29)
86
30
A/C COMPRESSOR CLUTCH RELAY
85
87
7
C6
2
C6
A/C PRESSURE TRANSDUCER
2
3
1
2.0L
2.4L
3.3L/3.8L
C3
18
DB/BK
1
A/C COMPRESSOR CLUTCH
2
K6
18
VT/WT
C18
18
DB
K4
18
BK/LB
K4
18
BK/LB
K4
18
BK/LB
C13
18
DB/OR
ES03
(8W-70-7)
ES02
(8W-70-4)
FS01
(8W-70-5)
ES21
(8W-70-6)
5
F09
E69
Z1
18
BK
ES23
(8W-15-2)
ES21
(8W-70-4)
ES02
(8W-70-5)
ES02
(8W-70-6)
Z1
12
BK
G102
(8W-15-2)
K6
18
VT/WT
ES21
(8W-70-5)
64
C2
61
C2
42
C2
43
C2
A/C COMPRESSOR CLUTCH RELAY CONTROL
5V SUPPLY
A/C PRESSURE SWITCH SIGNAL
SENSOR GROUND
POWERTRAIN CONTROL MODULE
(8W-30-5)

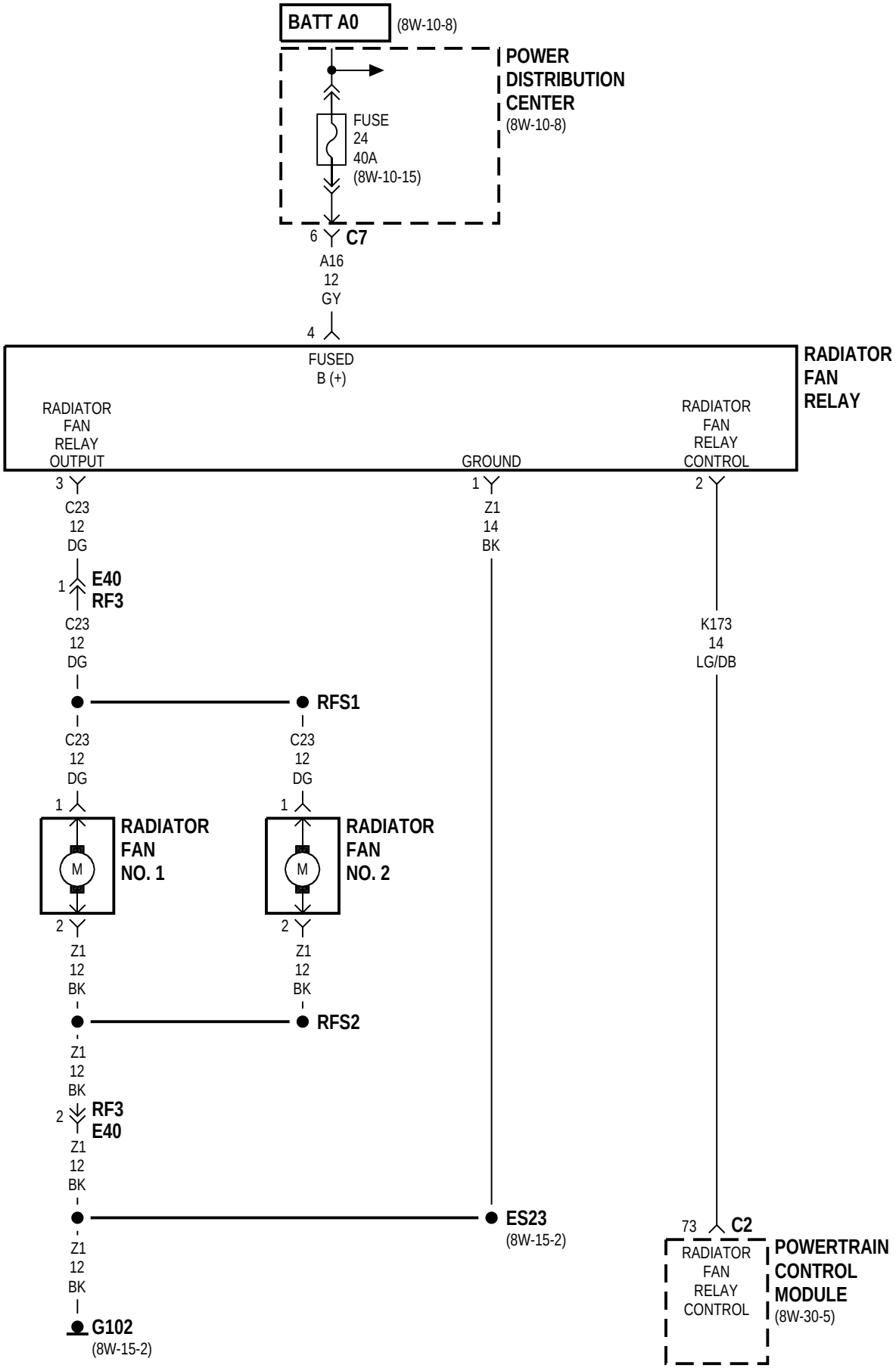
BATT A0
(8W-10-8)
POWER DISTRIBUTION CENTER
(8W-10-8)
FUSE
24
40A
(8W-10-15)
6
C7
A16
12
GY
4
FUSED
B (+)
RADIATOR FAN RELAY
RADIATOR FAN RELAY OUTPUT
GROUND
RADIATOR FAN RELAY CONTROL
3
1
2
C23
12
DG
Z1
14
BK
K173
14
LG/DB
1
E40
RF3
RFS1
RFS2
RADIATOR FAN NO. 1
RADIATOR FAN NO. 2
M
Z1
12
BK
RF3
E40
ES23
(8W-15-2)
73
C2
POWERTRAIN CONTROL MODULE
(8W-30-5)
G102
(8W-15-2)

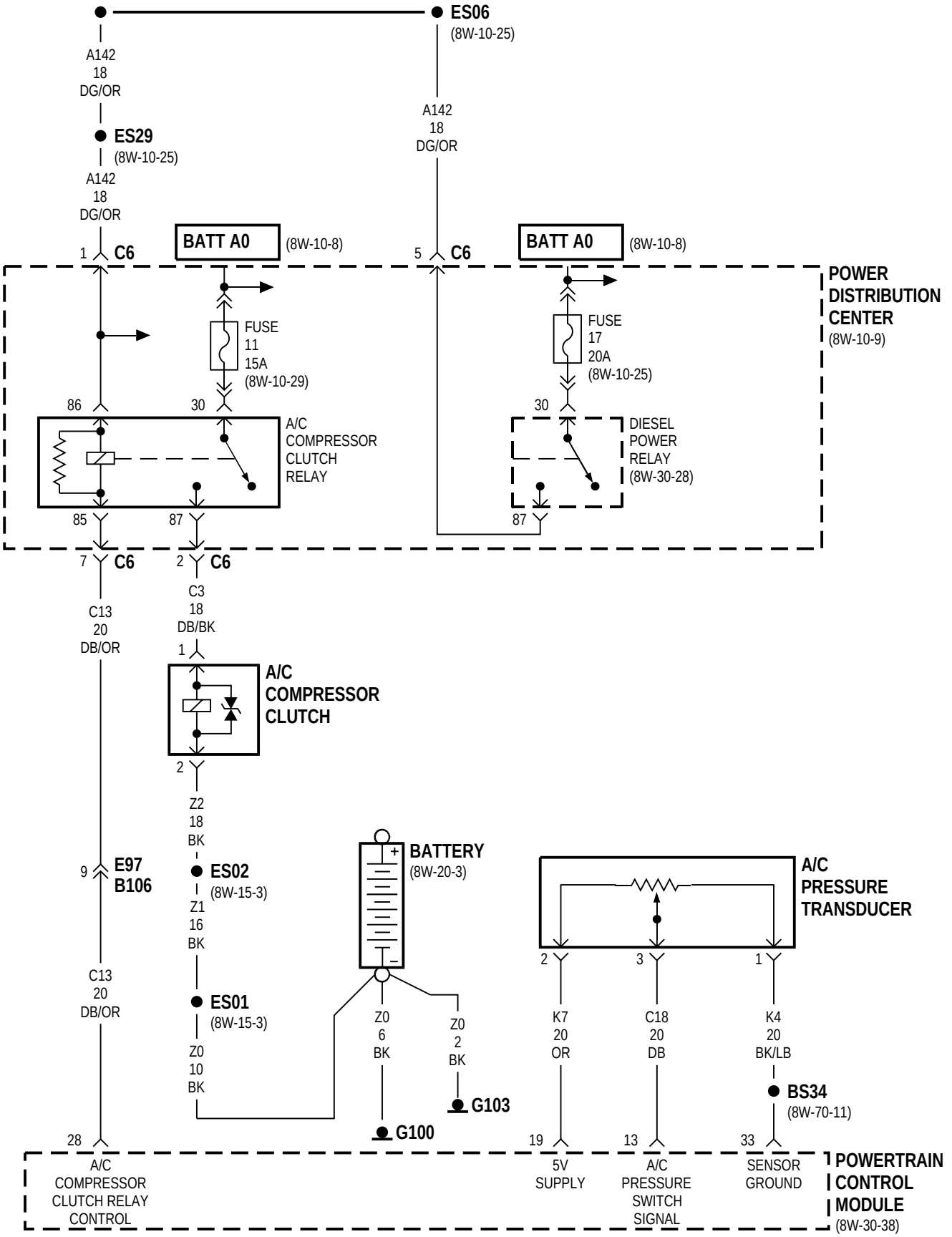
ES06
(8W-10-25)
A142
18
DG/OR
ES29
(8W-10-25)
A142
18
DG/OR
A142
18
DG/OR
1
C6
BATT A0
(8W-10-8)
5
C6
BATT A0
(8W-10-8)
POWER
DISTRIBUTION
CENTER
(8W-10-9)
FUSE
11
15A
(8W-10-29)
FUSE
17
20A
(8W-10-25)
86
30
30
A/C
COMPRESSOR
CLUTCH
RELAY
DIESEL
POWER
RELAY
(8W-30-28)
85
87
87
7
C6
2
C6
C13
20
DB/OR
C3
18
DB/BK
1
A/C
COMPRESSOR
CLUTCH
2
Z2
18
BK
9
E97
B106
ES02
(8W-15-3)
BATTERY
(8W-20-3)
A/C
PRESSURE
TRANSDUCER
Z1
16
BK
C13
20
DB/OR
ES01
(8W-15-3)
Z0
10
BK
Z0
6
BK
Z0
2
BK
G103
G100
2
3
1
K7
20
OR
C18
20
DB
K4
20
BK/LB
BS34
(8W-70-11)
28
19
13
33
A/C
COMPRESSOR
CLUTCH RELAY
CONTROL
5V
SUPPLY
A/C
PRESSURE
SWITCH
SIGNAL
SENSOR
GROUND
POWERTRAIN
CONTROL
MODULE
(8W-30-38)

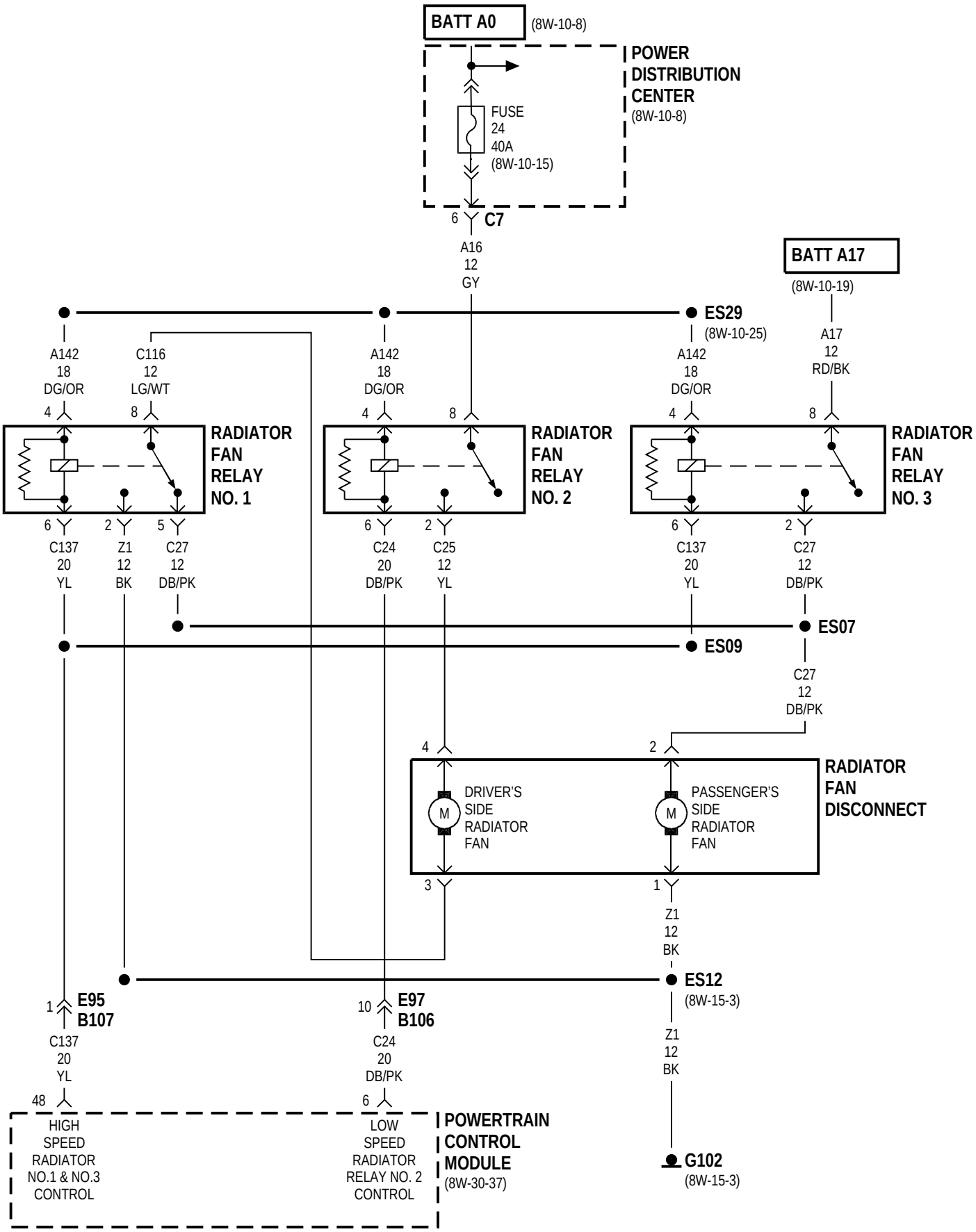
BATT A0
(8W-10-8)
POWER DISTRIBUTION CENTER
(8W-10-8)
FUSE 24 40A
(8W-10-15)
6 C7
A16 12 GY
BATT A17
(8W-10-19)
ES29
(8W-10-25)
A17 12 RD/BK
A142 18 DG/OR
C116 12 LG/WT
RADIATOR FAN RELAY NO. 1
RADIATOR FAN RELAY NO. 2
RADIATOR FAN RELAY NO. 3
C137 20 YL
Z1 12 BK
C27 12 DB/PK
C24 20 DB/PK
C25 12 YL
ES07
ES09
RADIATOR FAN DISCONNECT
DRIVER'S SIDE RADIATOR FAN
PASSENGER'S SIDE RADIATOR FAN
ES12
(8W-15-3)
E95 B107
E97 B106
HIGH SPEED RADIATOR NO.1 & NO.3 CONTROL
LOW SPEED RADIATOR RELAY NO. 2 CONTROL
POWERTRAIN CONTROL MODULE
(8W-30-37)
G102
(8W-15-3)

8W-43 AIRBAG SYSTEM

Component	Page
Airbag Control Module	8W-43-2, 3
Airbag Indicator Lamp	8W-43-3
Clockspring	8W-43-2
Data Link Connector	8W-43-3
Driver Airbag Squib	8W-43-2
Fuse 1 (PDC)	8W-43-2
Fuse 2 (PDC)	8W-43-2
Fuse 6 (JB)	8W-43-3
G204	8W-43-2
Junction Block	8W-43-3
Message Center	8W-43-3
Passenger Airbag Squib	8W-43-3
Power Distribution Center	8W-43-2
PS01	8W-43-3
PS02	8W-43-3

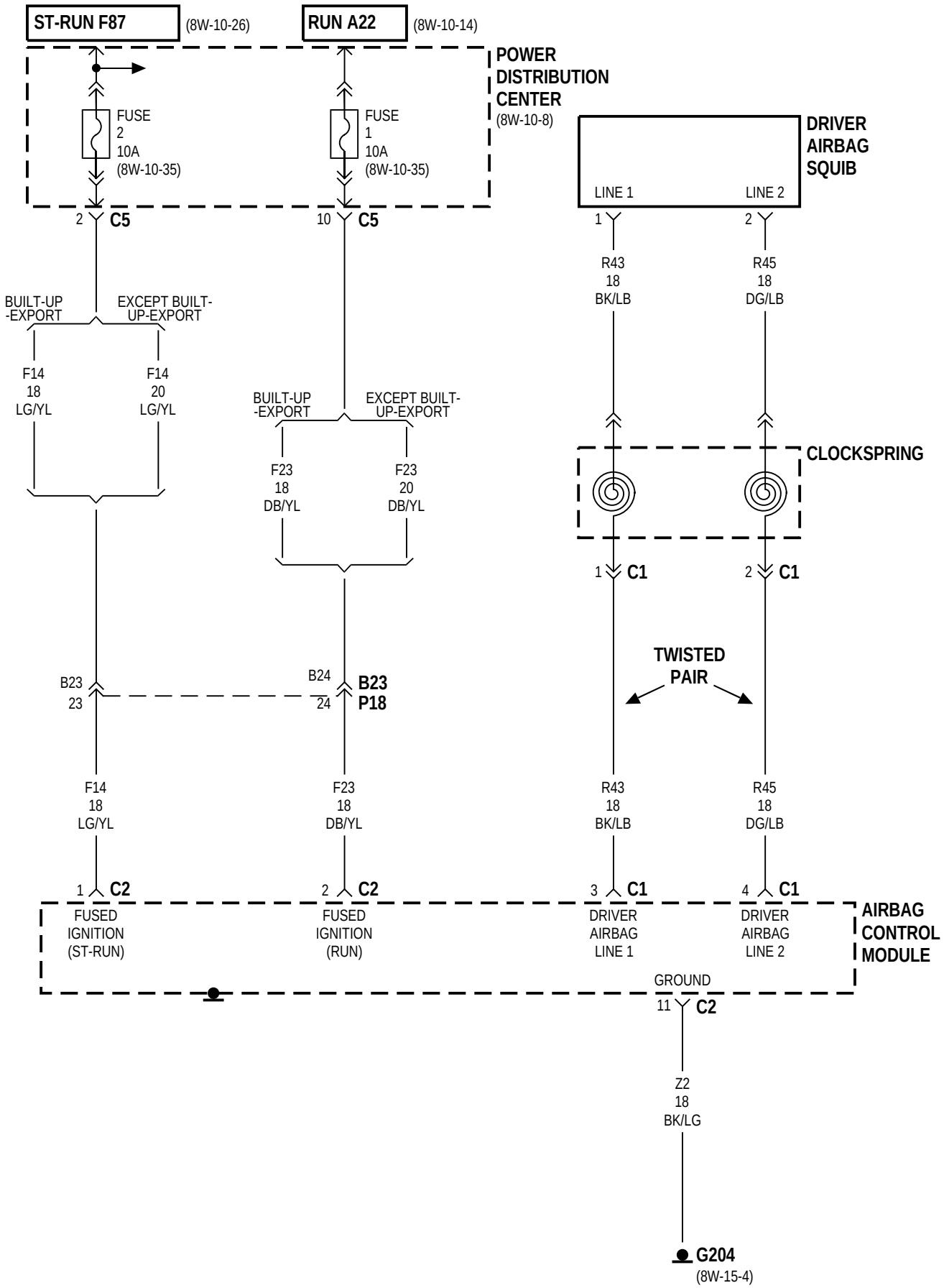
ST-RUN F87
(8W-10-26)
RUN A22
(8W-10-14)
POWER DISTRIBUTION CENTER
(8W-10-8)
FUSE 2 10A (8W-10-35)
FUSE 1 10A (8W-10-35)
DRIVER AIRBAG SQUIB
LINE 1
LINE 2
2 C5
10 C5
1
2
R43 18 BK/LB
R45 18 DG/LB
BUILT-UP -EXPORT
EXCEPT BUILT-UP-EXPORT
F14 18 LG/YL
F14 20 LG/YL
BUILT-UP -EXPORT
EXCEPT BUILT-UP-EXPORT
F23 18 DB/YL
F23 20 DB/YL
CLOCKSPRING
1 C1
2 C1
TWISTED PAIR
B23 23
B24 24
B23 P18
F14 18 LG/YL
F23 18 DB/YL
R43 18 BK/LB
R45 18 DG/LB
1 C2
2 C2
3 C1
4 C1
FUSED IGNITION (ST-RUN)
FUSED IGNITION (RUN)
DRIVER AIRBAG LINE 1
DRIVER AIRBAG LINE 2
AIRBAG CONTROL MODULE
GROUND
11 C2
Z2 18 BK/LG
G204
(8W-15-4)

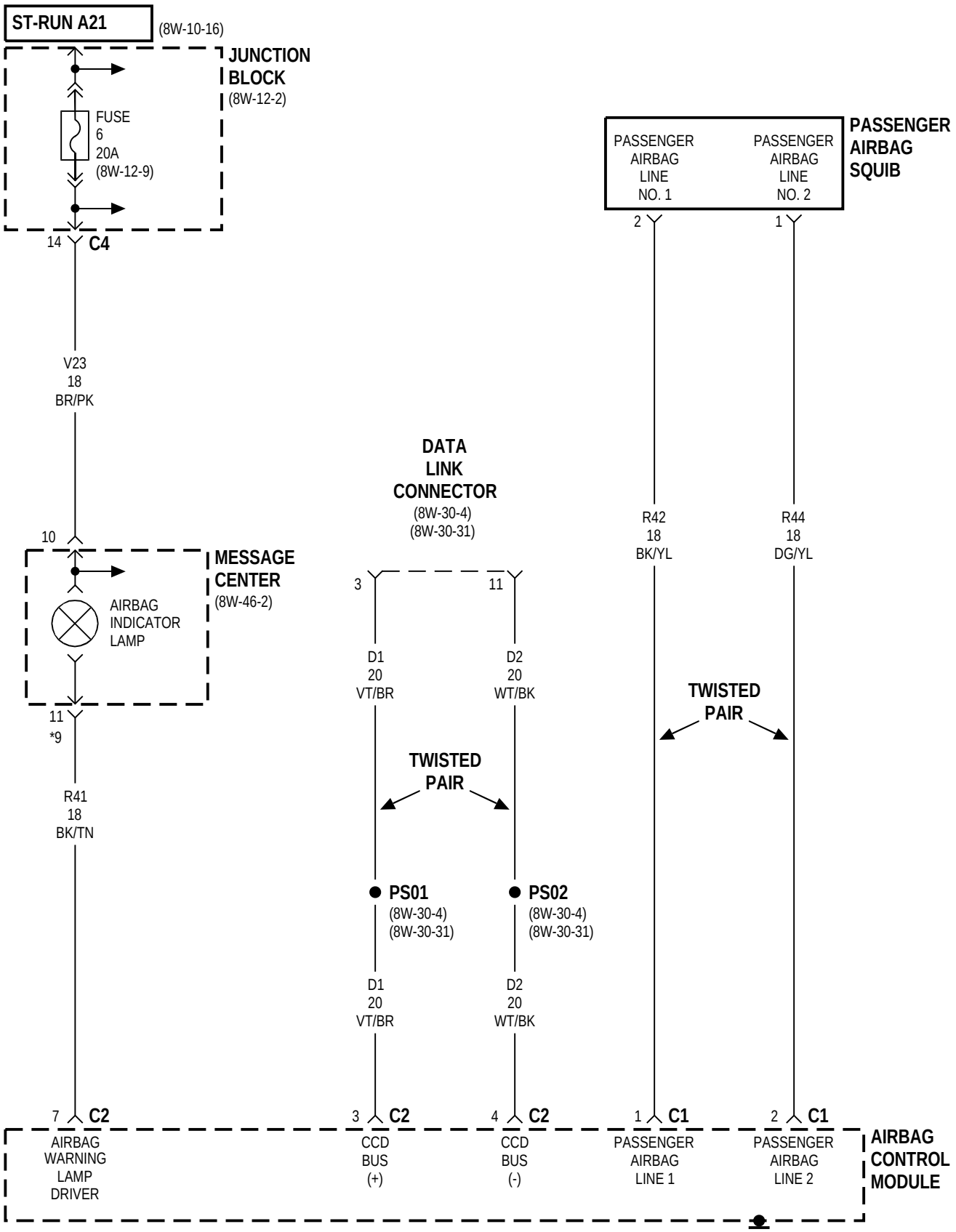
ST-RUN A21
(8W-10-16)
JUNCTION BLOCK
(8W-12-2)
FUSE
6
20A
(8W-12-9)
14
C4
V23
18
BR/PK
10
MESSAGE CENTER
(8W-46-2)
AIRBAG INDICATOR LAMP
11
*9
R41
18
BK/TN
DATA LINK CONNECTOR
(8W-30-4)
(8W-30-31)
3
11
D1
20
VT/BR
D2
20
WT/BK
TWISTED PAIR
PS01
(8W-30-4)
(8W-30-31)
PS02
(8W-30-4)
(8W-30-31)
D1
20
VT/BR
D2
20
WT/BK
PASSENGER AIRBAG LINE NO. 1
PASSENGER AIRBAG LINE NO. 2
PASSENGER AIRBAG SQUIB
2
1
R42
18
BK/YL
R44
18
DG/YL
TWISTED PAIR
7
C2
AIRBAG WARNING LAMP DRIVER
3
C2
CCD BUS (+)
4
C2
CCD BUS (-)
1
C1
PASSENGER AIRBAG LINE 1
2
C1
PASSENGER AIRBAG LINE 2
AIRBAG CONTROL MODULE

* RHD

8W-44 INTERIOR LIGHTING

Component	Page
A/C Heater Control	8W-44-8
Ash Receiver Lamp	8W-44-7
Automatic Day/Night Mirror	8W-44-6
Back-Up Switch	8W-44-6
Body Control Module	8W-44-2, 3, 4, 5, 6, 7, 8, 9
BS02	8W-44-6
Center Dome Lamp	8W-44-4
Courtesy Lamp Relay	8W-44-2, 3, 4
CS01	8W-44-4
CS02	8W-44-2, 3, 4
CS03	8W-44-2, 3, 4
CS04	8W-44-6
CS06	8W-44-8
CS1	8W-44-4
Driver Door Ajar Switch	8W-44-5
Driver Door Courtesy Lamp	8W-44-3
Driver Door Lock Switch	8W-44-9
Driver Power Mirror	8W-44-6
Driver Power Window Switch	8W-44-9
DS01	8W-44-3, 9
EC1 C19	8W-44-6
Front Cigar Lighter/Power Outlet	8W-44-8
Front Reading Lamp Defeat Switch	8W-44-2
Front Reading Lamps/Switch	8W-44-2
Fuse 1 (JB)	8W-44-7
Fuse 3 (JB)	8W-44-7
Fuse 6 (JB)	8W-44-6
Fuse 12 (JB)	8W-44-6
Fuse 18 (PDC)	8W-44-2, 3, 4
Fuse 22 (PDC)	8W-44-7
G200	8W-44-8
G201	8W-44-8
G300	8W-44-3, 6, 7, 8, 9
G301	8W-44-5, 8, 9
G302	8W-44-5, 8
G400	8W-44-4, 5
Glove Box Lamp	8W-44-2, 3, 4
Headlamp Switch	8W-44-2, 7
Hood Ajar Switch	8W-44-5
Ignition Switch	8W-44-8
Instrument Cluster	8W-44-8
Interior Lamps On Switch	8W-44-2
Junction Block	8W-44-2, 3, 4, 6, 7, 8, 9
Key-In Halo Lamp	8W-44-3
Left Liftgate Flood Lamp	8W-44-4
Left Mid Reading Lamp	8W-44-4
Left Rear Door Ajar Switch	8W-44-5
Left Rear Reading Lamp	8W-44-4
Left Visor/Vanity Mirror Lamps	8W-44-3
Liftgate Ajar Switch	8W-44-5
Message Center	8W-44-7
Park Lamp Relay	8W-44-7
Passenger Door Ajar Switch	8W-44-5
Passenger Door Courtesy Lamp	8W-44-3, 9
Passenger Door Lock Switch	8W-44-9
Passenger Power Window Switch	8W-44-3, 9
Power Distribution Center	8W-44-2, 3, 4, 7
Power Mirror Switch	8W-44-8
Radio	8W-44-7, 8
Rear Blower Front Control Switch	8W-44-8
Rear Blower Rear Control Switch	8W-44-8
Rear Dome Lamp	8W-44-4
Right Liftgate Flood Lamp	8W-44-4
Right Mid Reading Lamp	8W-44-4
Right Rear Door Ajar Switch	8W-44-5
Right Rear Reading Lamp	8W-44-4
Right Visor/Vanity Mirror Lamps	8W-44-3
Traction Control Switch	8W-44-8
Transmission Range Sensor	8W-44-6
Universal Garage Door Opener	8W-44-8

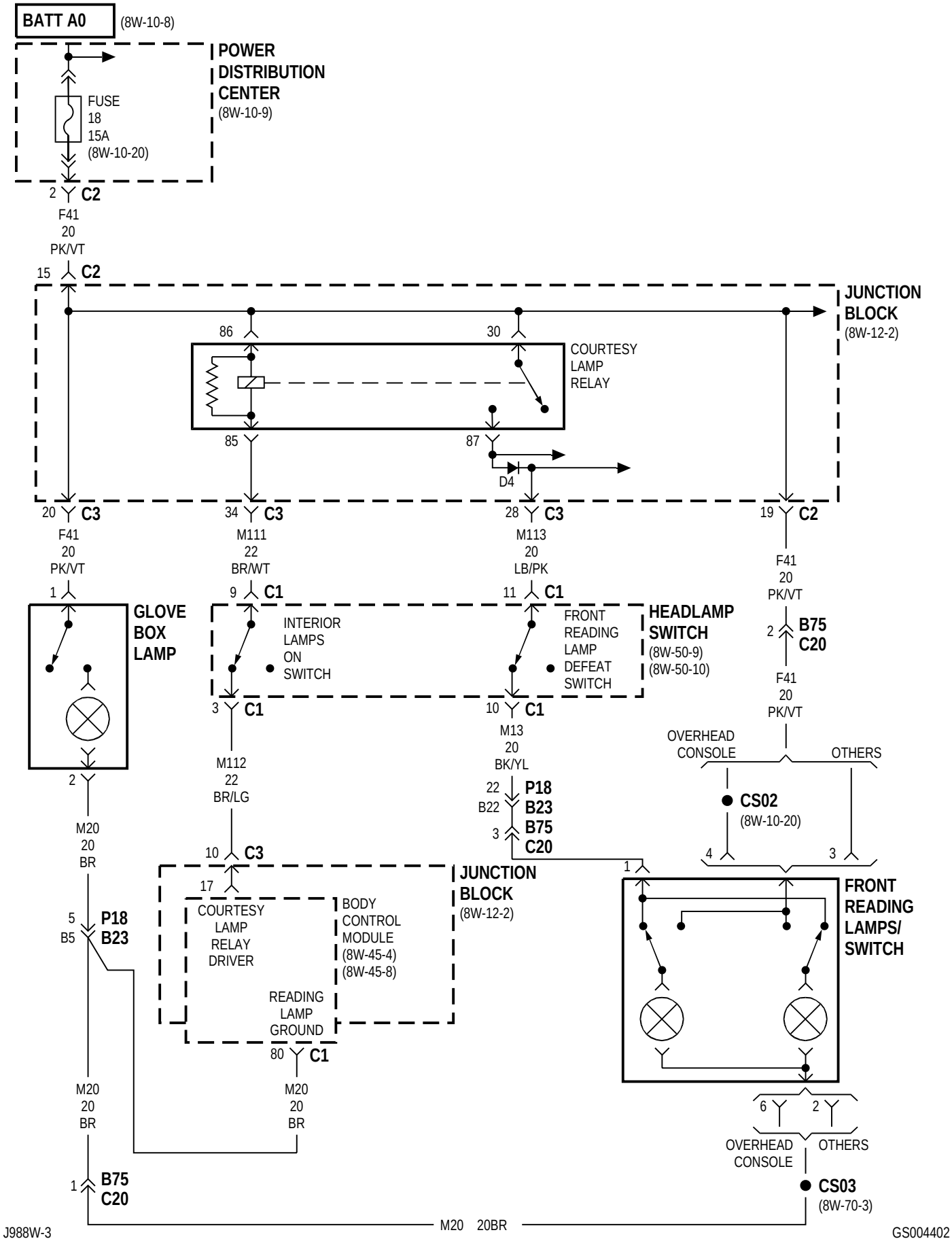
BATT A0
(8W-10-8)
POWER DISTRIBUTION CENTER
(8W-10-9)
FUSE 18 15A
(8W-10-20)
2 C2
F41 20 PK/VT
15 C2
JUNCTION BLOCK
(8W-12-2)
86
30
COURTESY LAMP RELAY
85
87
D4
20 C3
F41 20 PK/VT
34 C3
M111 22 BR/WT
28 C3
M113 20 LB/PK
19 C2
F41 20 PK/VT
1
GLOVE BOX LAMP
9 C1
11 C1
INTERIOR LAMPS ON SWITCH
FRONT READING LAMP DEFEAT SWITCH
HEADLAMP SWITCH
(8W-50-9)
(8W-50-10)
2 B75 C20
F41 20 PK/VT
3 C1
10 C1
M13 20 BK/YL
OVERHEAD CONSOLE
OTHERS
CS02
(8W-10-20)
4
3
2
M20 20 BR
M112 22 BR/LG
22 P18
B22 B23
3 B75 C20
10 C3
1
17
JUNCTION BLOCK
(8W-12-2)
COURTESY LAMP RELAY DRIVER
BODY CONTROL MODULE
(8W-45-4)
(8W-45-8)
FRONT READING LAMPS/ SWITCH
READING LAMP GROUND
80 C1
5 P18
B5 B23
M20 20 BR
M20 20 BR
6
2
OVERHEAD CONSOLE
OTHERS
CS03
(8W-70-3)
1 B75 C20
M20 20BR

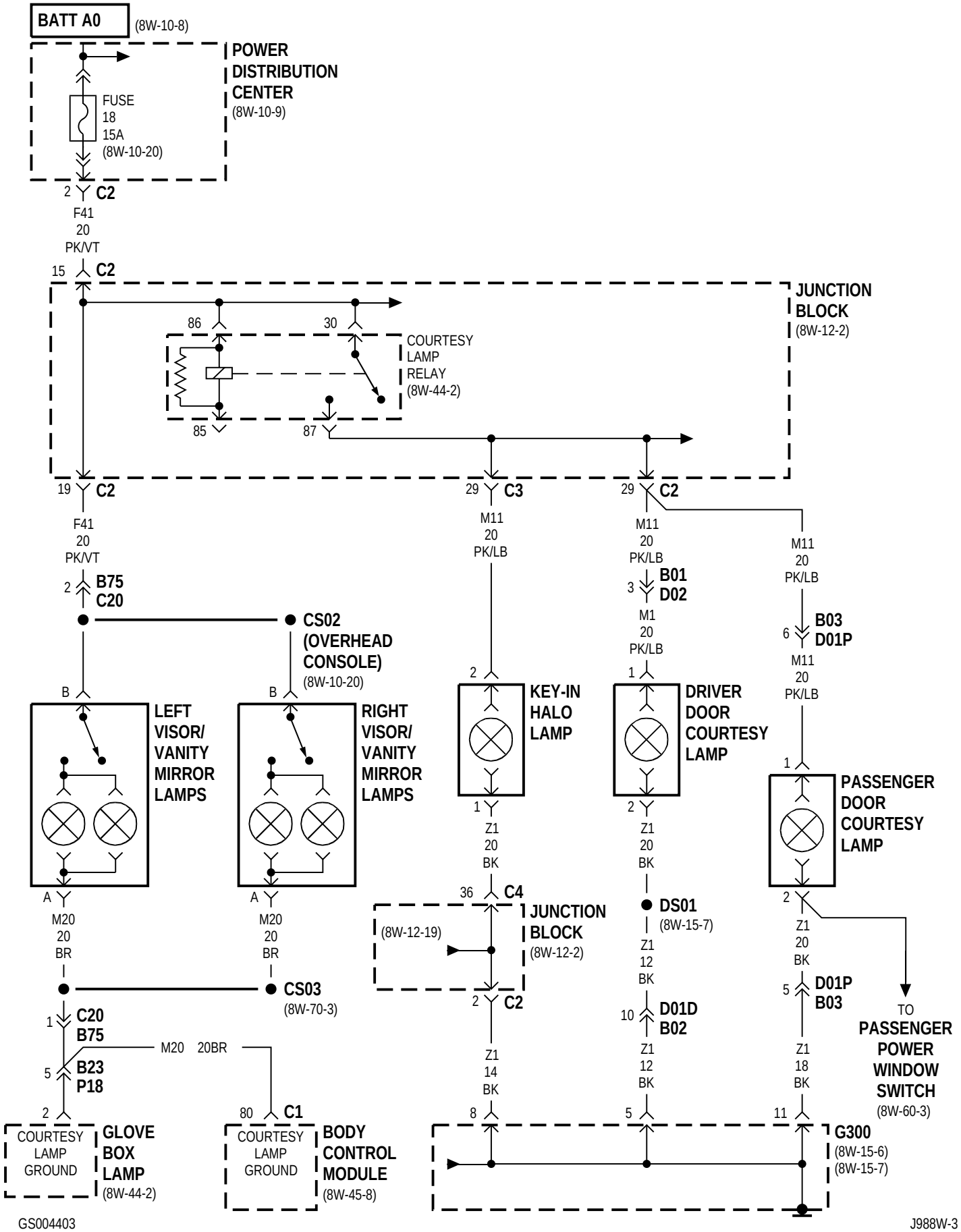

GS004403 J988W-3

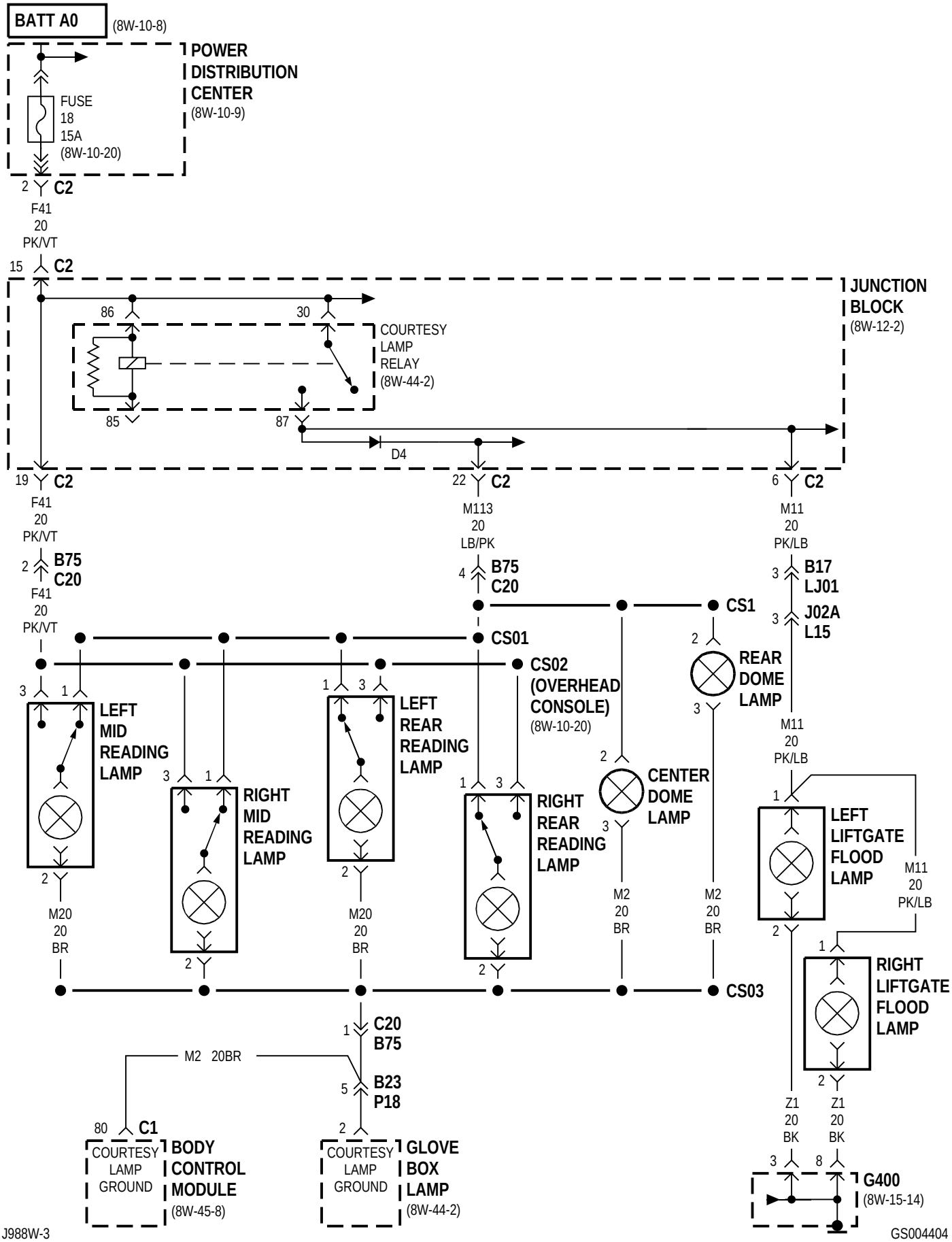
BATT A0
(8W-10-8)
POWER DISTRIBUTION CENTER
(8W-10-9)
FUSE 18 15A
(8W-10-20)
2 C2
F41 20 PK/VT
15 C2
JUNCTION BLOCK
(8W-12-2)
86
30
COURTESY LAMP RELAY
(8W-44-2)
85
87
D4
19 C2
F41 20 PK/VT
22 C2
M113 20 LB/PK
6 C2
M11 20 PK/LB
2 B75 C20
F41 20 PK/VT
4 B75 C20
3 B17 LJ01
3 J02A L15
CS1
CS01
CS02 (OVERHEAD CONSOLE)
(8W-10-20)
2 REAR DOME LAMP
3
M11 20 PK/LB
3 1 LEFT MID READING LAMP
2
M20 20 BR
3 1 RIGHT MID READING LAMP
2
1 3 LEFT REAR READING LAMP
2
M20 20 BR
1 3 RIGHT REAR READING LAMP
2
2 CENTER DOME LAMP
3
M2 20 BR
M2 20 BR
1 LEFT LIFTGATE FLOOD LAMP
2
M11 20 PK/LB
1 RIGHT LIFTGATE FLOOD LAMP
2
CS03
1 C20 B75
M2 20BR
5 B23 P18
80 C1
COURTESY LAMP GROUND
BODY CONTROL MODULE
(8W-45-8)
2
COURTESY LAMP GROUND
GLOVE BOX LAMP
(8W-44-2)
Z1 20 BK
Z1 20 BK
3 8
G400
(8W-15-14)
J988W-3
GS004404

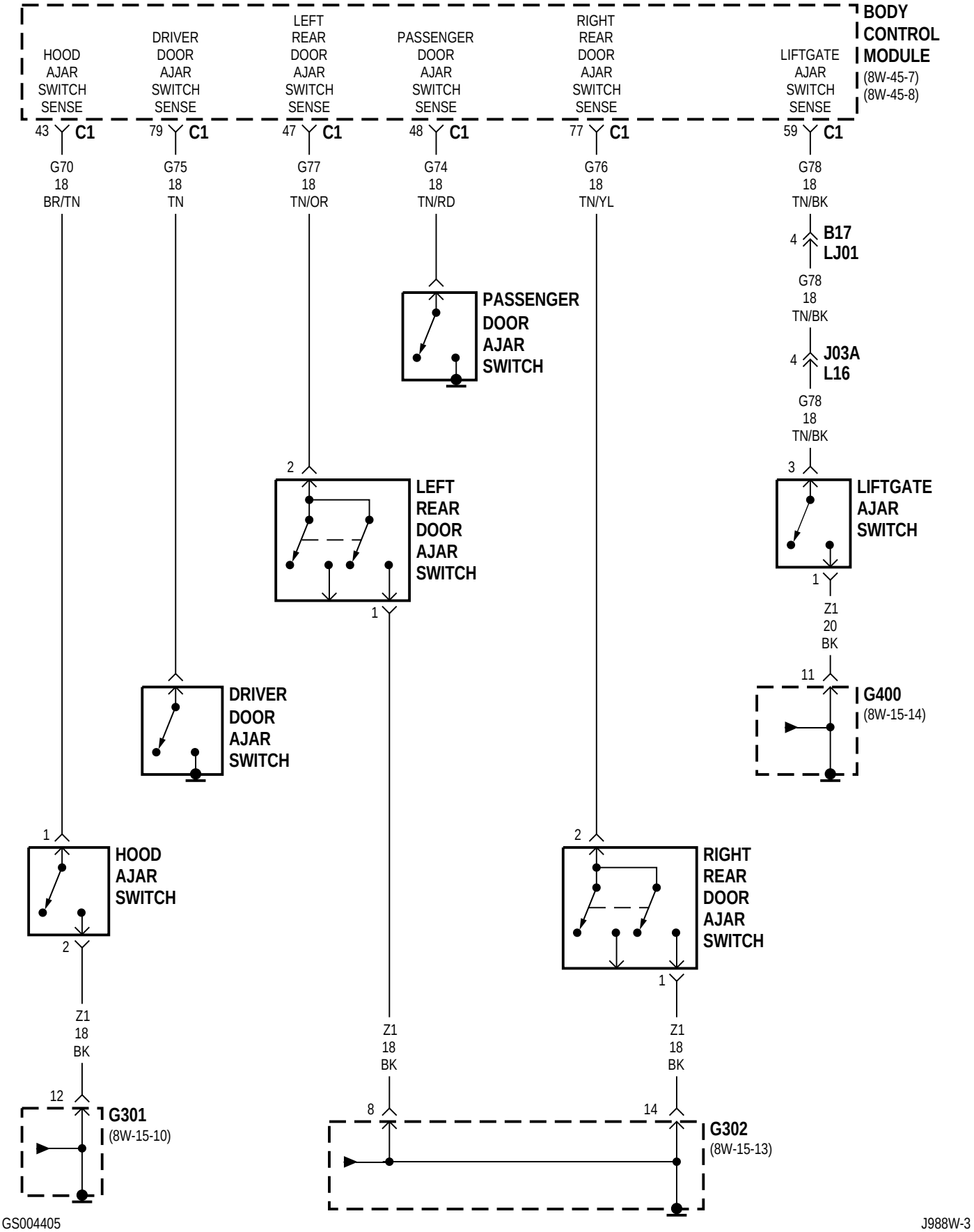
BODY CONTROL MODULE
(8W-45-7)
(8W-45-8)
HOOD AJAR SWITCH SENSE
DRIVER DOOR AJAR SWITCH SENSE
LEFT REAR DOOR AJAR SWITCH SENSE
PASSENGER DOOR AJAR SWITCH SENSE
RIGHT REAR DOOR AJAR SWITCH SENSE
LIFTGATE AJAR SWITCH SENSE
43 C1
79 C1
47 C1
48 C1
77 C1
59 C1
G70 18 BR/TN
G75 18 TN
G77 18 TN/OR
G74 18 TN/RD
G76 18 TN/YL
G78 18 TN/BK
4 B17 LJ01
G78 18 TN/BK
4 J03A L16
G78 18 TN/BK
PASSENGER DOOR AJAR SWITCH
2
LEFT REAR DOOR AJAR SWITCH
1
3
LIFTGATE AJAR SWITCH
1
Z1 20 BK
11
G400
(8W-15-14)
DRIVER DOOR AJAR SWITCH
1
HOOD AJAR SWITCH
2
Z1 18 BK
12
G301
(8W-15-10)
2
RIGHT REAR DOOR AJAR SWITCH
1
Z1 18 BK
Z1 18 BK
8
14
G302
(8W-15-13)

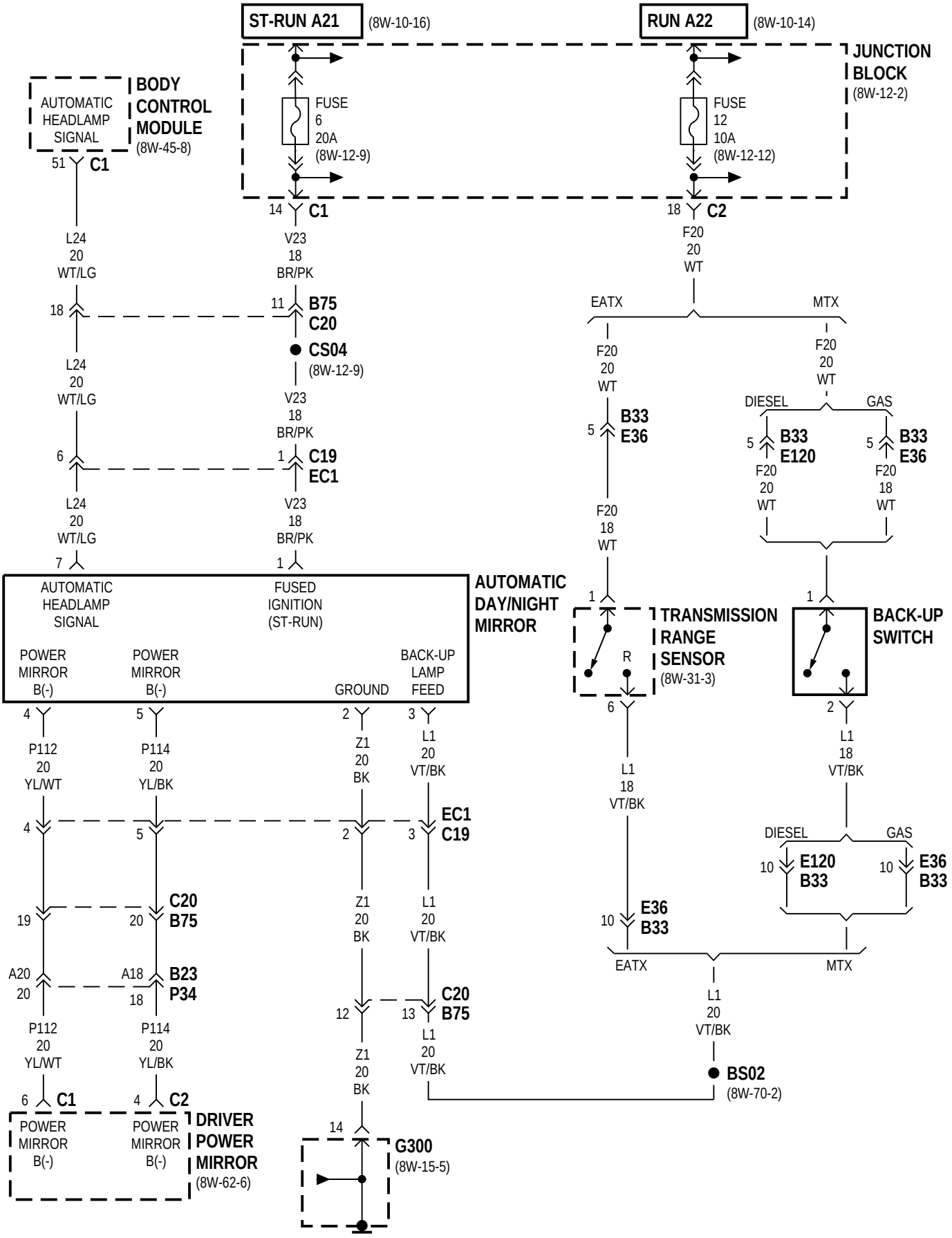
ST-RUN A21
(8W-10-16)
RUN A22
(8W-10-14)
JUNCTION BLOCK
(8W-12-2)
FUSE 6 20A (8W-12-9)
FUSE 12 10A (8W-12-12)
BODY CONTROL MODULE
(8W-45-8)
AUTOMATIC HEADLAMP SIGNAL
51 C1
14 C1
18 C2
L24 20 WT/LG
V23 18 BR/PK
F20 20 WT
18
11 B75 C20
CS04 (8W-12-9)
EATX
MTX
F20 20 WT
F20 18 WT
DIESEL
GAS
5 B33 E36
5 B33 E120
5 B33 E36
6
1 C19 EC1
7
1
AUTOMATIC HEADLAMP SIGNAL
FUSED IGNITION (ST-RUN)
AUTOMATIC DAY/NIGHT MIRROR
POWER MIRROR B(-)
POWER MIRROR B(-)
GROUND
BACK-UP LAMP FEED
TRANSMISSION RANGE SENSOR
(8W-31-3)
R
BACK-UP SWITCH
4
5
2
3
P112 20 YL/WT
P114 20 YL/BK
Z1 20 BK
L1 20 VT/BK
L1 18 VT/BK
EC1 C19
C20 B75
E36 B33
E120 B33
E36 B33
A20 20
A18 18
B23 P34
12
13
BS02
(8W-70-2)
DRIVER POWER MIRROR
(8W-62-6)
G300
(8W-15-5)

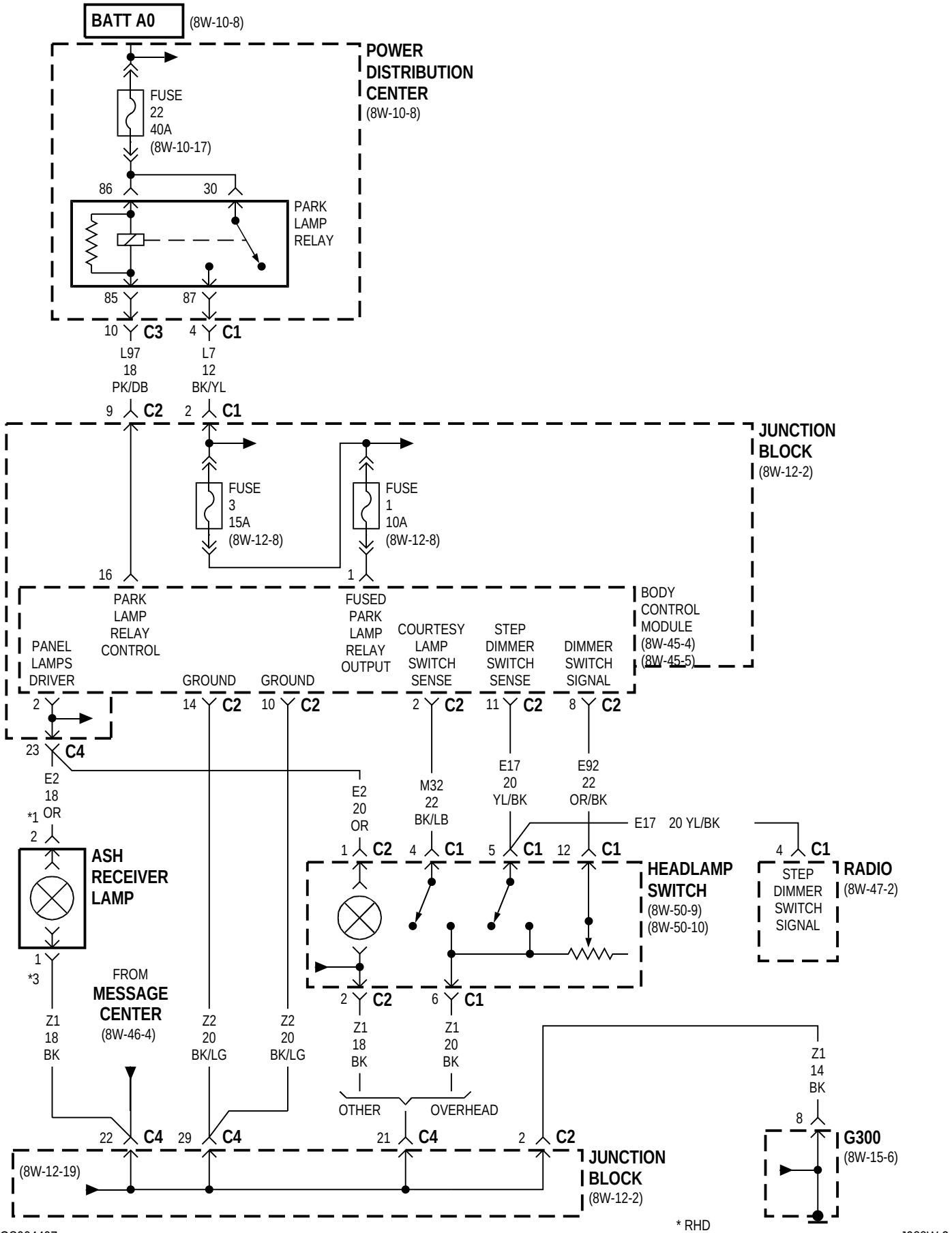

GS004407

J988W-3

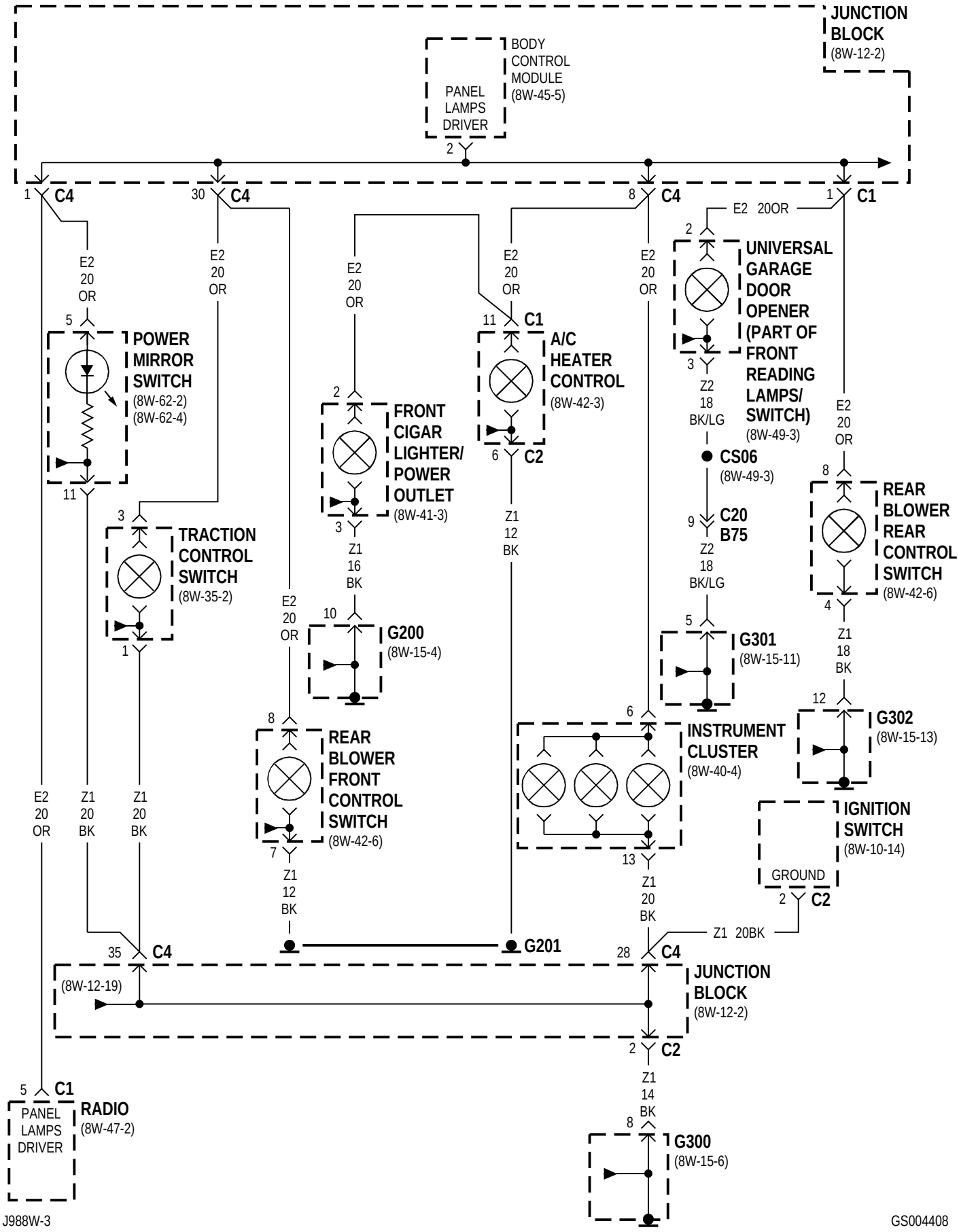
JUNCTION BLOCK (8W-12-2)
BODY CONTROL MODULE (8W-45-5)
PANEL LAMPS DRIVER
2
1 C4
30 C4
8 C4
1 C1
E2 20OR
E2 20 OR
5
POWER MIRROR SWITCH (8W-62-2) (8W-62-4)
11
3
TRACTION CONTROL SWITCH (8W-35-2)
1
2
FRONT CIGAR LIGHTER/ POWER OUTLET (8W-41-3)
3
Z1 16 BK
10
G200 (8W-15-4)
11 C1
A/C HEATER CONTROL (8W-42-3)
6 C2
Z1 12 BK
2
UNIVERSAL GARAGE DOOR OPENER (PART OF FRONT READING LAMPS/ SWITCH) (8W-49-3)
3
Z2 18 BK/LG
CS06 (8W-49-3)
9 C20 B75
Z2 18 BK/LG
5
G301 (8W-15-11)
8
REAR BLOWER REAR CONTROL SWITCH (8W-42-6)
4
Z1 18 BK
12
G302 (8W-15-13)
8
REAR BLOWER FRONT CONTROL SWITCH (8W-42-6)
7
Z1 12 BK
6
INSTRUMENT CLUSTER (8W-40-4)
13
Z1 20 BK
IGNITION SWITCH (8W-10-14)
GROUND
2 C2
Z1 20BK
G201
35 C4
28 C4
(8W-12-19)
JUNCTION BLOCK (8W-12-2)
2 C2
Z1 14 BK
8
G300 (8W-15-6)
5 C1
PANEL LAMPS DRIVER
RADIO (8W-47-2)
E2 20 OR
Z1 20 BK
Z1 20 BK
J988W-3
GS004408

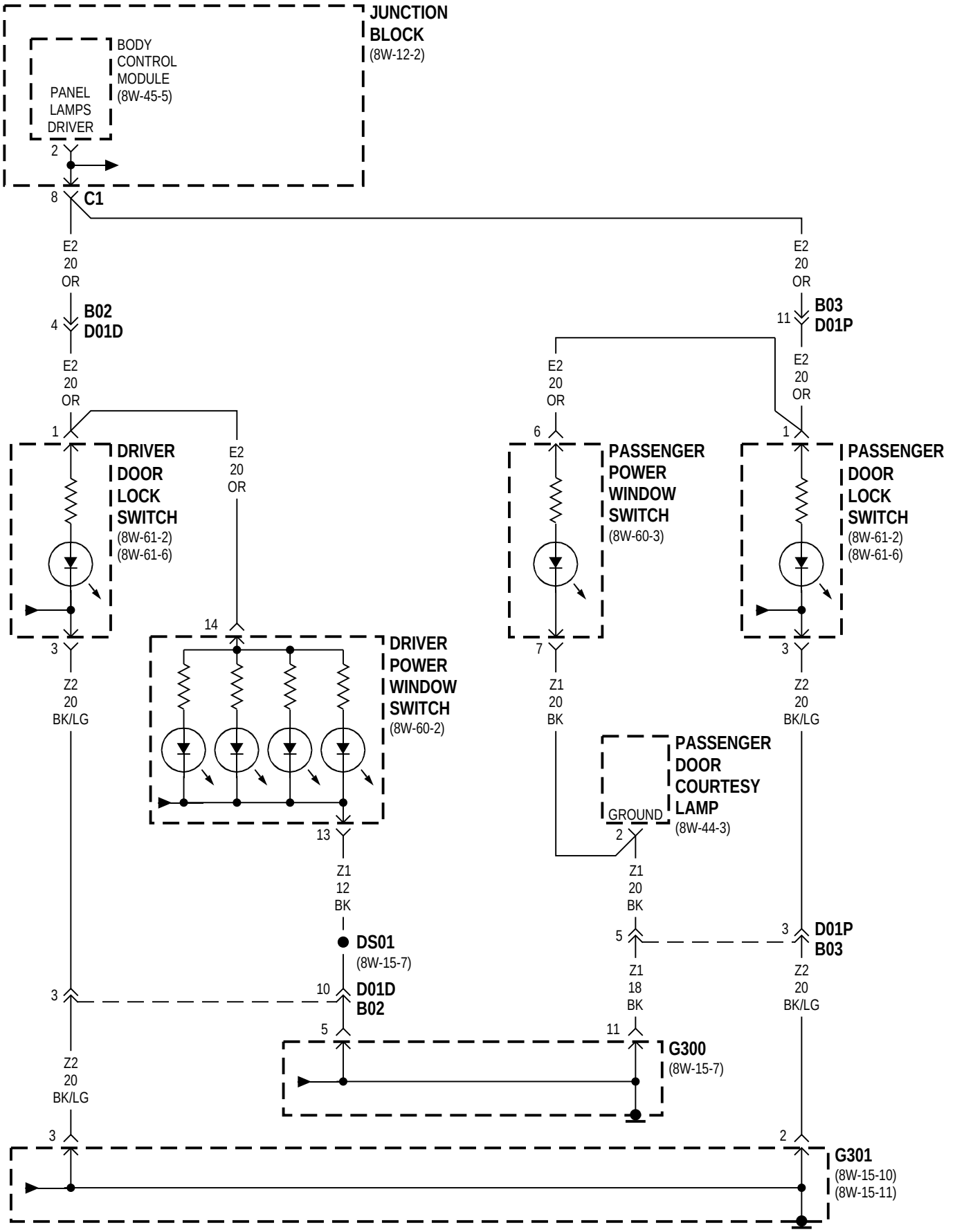
JUNCTION BLOCK
(8W-12-2)
BODY CONTROL MODULE
(8W-45-5)
PANEL LAMPS DRIVER
2
8
C1
E2 20 OR
4
B02 D01D
E2 20 OR
1
DRIVER DOOR LOCK SWITCH
(8W-61-2)
(8W-61-6)
E2 20 OR
3
Z2 20 BK/LG
14
DRIVER POWER WINDOW SWITCH
(8W-60-2)
13
Z1 12 BK
DS01
(8W-15-7)
10
D01D B02
3
Z2 20 BK/LG
5
E2 20 OR
11
B03 D01P
E2 20 OR
6
PASSENGER POWER WINDOW SWITCH
(8W-60-3)
7
Z1 20 BK
E2 20 OR
1
PASSENGER DOOR LOCK SWITCH
(8W-61-2)
(8W-61-6)
3
Z2 20 BK/LG
PASSENGER DOOR COURTESY LAMP
(8W-44-3)
GROUND
2
Z1 20 BK
5
Z1 18 BK
3
D01P B03
Z2 20 BK/LG
11
G300
(8W-15-7)
3
2
G301
(8W-15-10)
(8W-15-11)

8W-45 BODY CONTROL MODULE

Component	Page
A/C Heater Control	8W-45-5, 6
Ash Receiver Lamp	8W-45-5
Automatic Day/Night Mirror	8W-45-8
Back-Up Switch	8W-45-9
Battery	8W-45-9
Body Control Module	8W-45-2, 3, 4, 5, 6, 7, 8, 9, 10
BS02	8W-45-9
BS10	8W-45-8
BS30	8W-45-9
Clockspring	8W-45-3
Combination Flasher/DRL Module	8W-45-5
Controller Anti-Lock Brake	8W-45-6
CS03	8W-45-8
Data Link Connector	8W-45-3
Door Lock Relay	8W-45-7
Door Unlock Relay	8W-45-7
Driver Door Ajar Switch	8W-45-7
Driver Door Arm/Disarm Switch	8W-45-8
Driver Door Lock Switch	8W-45-6, 8
Driver Door Unlock Relay	8W-45-7
Driver Power Mirror	8W-45-10
Driver Power Window Switch	8W-45-6
Engine Coolant Temperature Sensor	8W-45-9
Engine Oil Pressure Switch	8W-45-7
ES01	8W-45-9
ES02	8W-45-9
Front Cigar Lighter/Power Outlet	8W-45-5
Front Reading Lamps/Switch	8W-45-8
Front Wiper Switch	8W-45-4
Fuel Tank Module	8W-45-7, 9
Fuse 1 (JB)	8W-45-3
Fuse 2 (JB)	8W-45-2
Fuse 3 (JB)	8W-45-3
Fuse 6 (JB)	8W-45-2
Fuse 19 (PDC)	8W-45-4
Fuse 22 (PDC)	8W-45-3
Fuse 28 (PDC)	8W-45-2
G100	8W-45-9
G103	8W-45-9
G300	8W-45-2, 10
G302	8W-45-9
Glove Box Lamp	8W-45-8
Headlamp Dimmer Switch	8W-45-5
Headlamp Switch	8W-45-2, 3, 4, 5
Hood Ajar Switch	8W-45-7
Horn Relay	8W-45-3
HVAC Control	8W-45-6
Ignition Switch	8W-45-2, 5
Instrument Cluster	8W-45-5
Junction Block	8W-45-2, 3, 4, 5, 6, 7, 10
Key-In Halo Lamp	8W-45-10
Left Mid Reading Lamp	8W-45-8
Left Rear Door Ajar Switch	8W-45-8
Left Rear Reading Lamp	8W-45-8
Left Visor/Vanity Mirror Lamps	8W-45-8
Liftgate Ajar Switch	8W-45-7
Liftgate Arm/Disarm Switch	8W-45-6
LJ01 B17	8W-45-4, 6
Low Beam Relay	8W-45-5
Low Coolant Level Switch	8W-45-9
Low Washer Fluid Switch	8W-45-3
Memory Seat/Mirror Module	8W-45-2, 6
Message Center	8W-45-5, 6
Park Lamp Relay	8W-45-3
Passenger Door Ajar Switch	8W-45-7
Passenger Door Arm/Disarm Switch	8W-45-8
Passenger Door Lock Switch	8W-45-6, 8
Passenger Power Mirror	8W-45-10
Passenger Power Window Switch	8W-45-6
Power Distribution Center	8W-45-2, 3, 4
Power Folding Mirror Switch	8W-45-10
Power Mirror Fold Relay	8W-45-10
Power Mirror Switch	8W-45-5
Power Mirror Unfold Relay	8W-45-10
Powertrain Control Module	8W-45-9
PS01	8W-45-3
PS02	8W-45-3
PTC 3 (JB)	8W-45-7
Radio	8W-45-4, 5
Rear Blower Front Control Switch	8W-45-5
Rear Blower Rear Control Switch	8W-45-6
Rear Washer Motor	8W-45-4
Rear Wiper Motor	8W-45-4
Remote Keyless Entry Module	8W-45-6
Right Mid Reading Lamp	8W-45-8
Right Rear Door Ajar Switch	8W-45-8
Right Rear Reading Lamp	8W-45-8
Right Visor/Vanity Mirror Lamps	8W-45-8
Seat Belt Switch	8W-45-7
Traction Control Switch	8W-45-5
Universal Garage Door Opener	8W-45-6
Wiper Module	8W-45-3
Wiper On Relay	8W-45-4

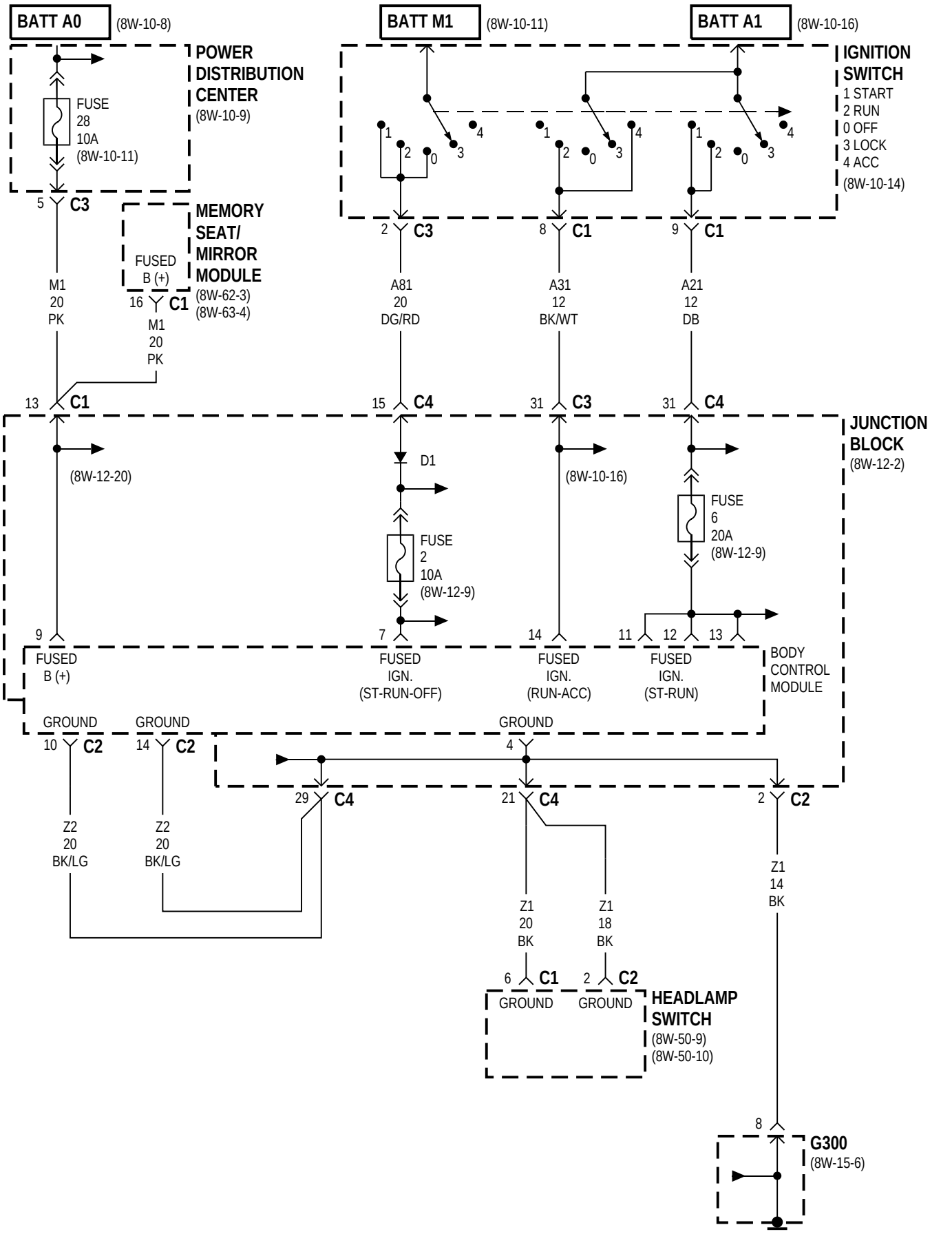
BATT A0
(8W-10-8)
POWER DISTRIBUTION CENTER
(8W-10-9)
FUSE 28 10A (8W-10-11)
5 C3
MEMORY SEAT/ MIRROR MODULE
(8W-62-3)
(8W-63-4)
FUSED B (+)
16 C1
M1 20 PK
M1 20 PK
BATT M1
(8W-10-11)
BATT A1
(8W-10-16)
IGNITION SWITCH
1 START
2 RUN
0 OFF
3 LOCK
4 ACC
(8W-10-14)
2 C3
8 C1
9 C1
A81 20 DG/RD
A31 12 BK/WT
A21 12 DB
13 C1
15 C4
31 C3
31 C4
JUNCTION BLOCK
(8W-12-2)
(8W-12-20)
D1
(8W-10-16)
FUSE 2 10A (8W-12-9)
FUSE 6 20A (8W-12-9)
9
7
14
11 12 13
FUSED B (+)
FUSED IGN. (ST-RUN-OFF)
FUSED IGN. (RUN-ACC)
FUSED IGN. (ST-RUN)
BODY CONTROL MODULE
GROUND
GROUND
GROUND
10 C2
14 C2
4
29 C4
21 C4
2 C2
Z2 20 BK/LG
Z2 20 BK/LG
Z1 20 BK
Z1 18 BK
Z1 14 BK
6 C1
2 C2
GROUND
GROUND
HEADLAMP SWITCH
(8W-50-9)
(8W-50-10)
8
G300
(8W-15-6)

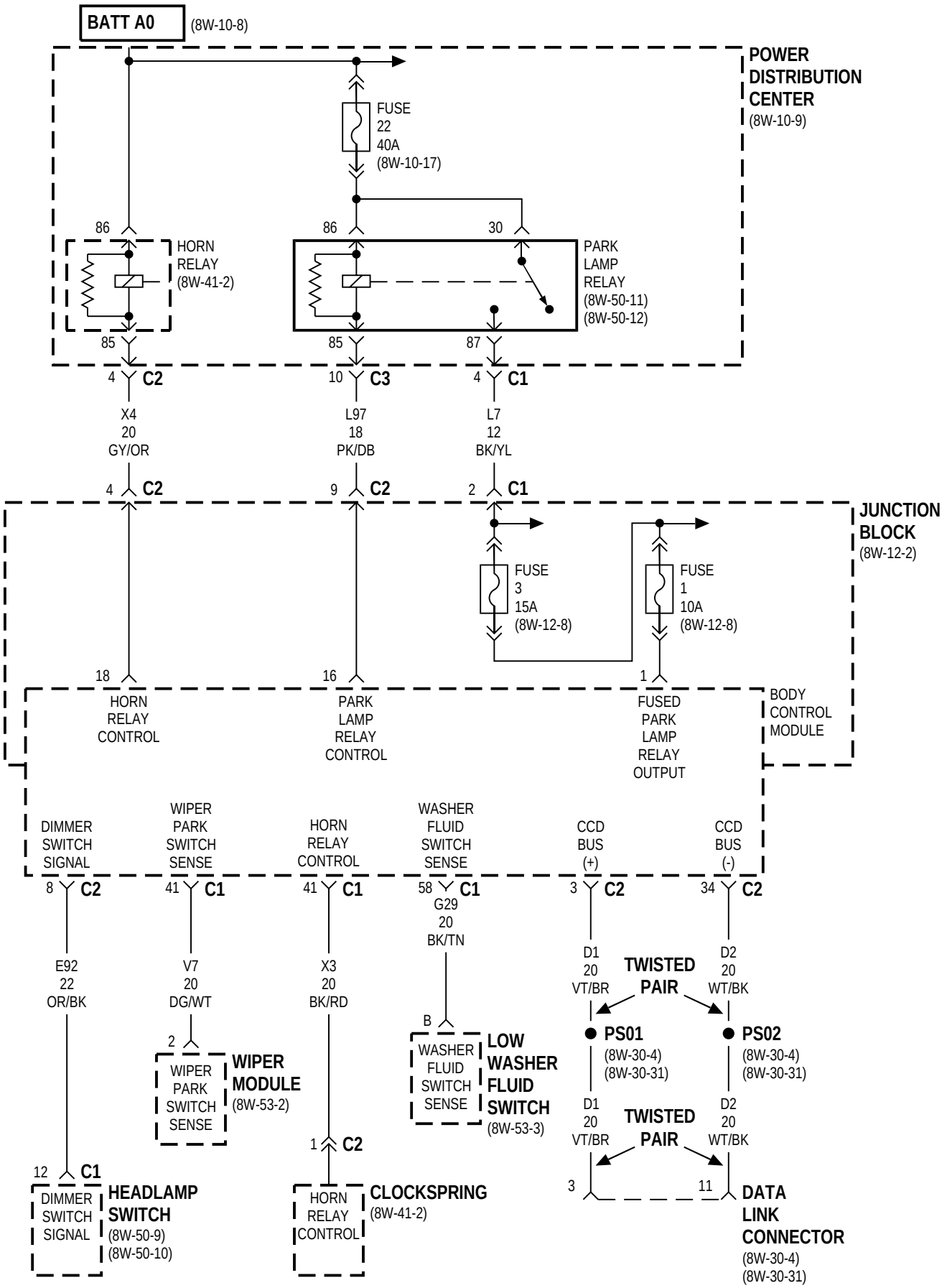
BATT A0
(8W-10-8)
POWER DISTRIBUTION CENTER
(8W-10-9)
FUSE 22 40A
(8W-10-17)
86
HORN RELAY
(8W-41-2)
85
86
30
PARK LAMP RELAY
(8W-50-11)
(8W-50-12)
85
87
4 C2
X4 20 GY/OR
10 C3
L97 18 PK/DB
4 C1
L7 12 BK/YL
4 C2
9 C2
2 C1
JUNCTION BLOCK
(8W-12-2)
FUSE 3 15A
(8W-12-8)
FUSE 1 10A
(8W-12-8)
18
16
1
HORN RELAY CONTROL
PARK LAMP RELAY CONTROL
FUSED PARK LAMP RELAY OUTPUT
BODY CONTROL MODULE
DIMMER SWITCH SIGNAL
WIPER PARK SWITCH SENSE
HORN RELAY CONTROL
WASHER FLUID SWITCH SENSE
CCD BUS (+)
CCD BUS (-)
8 C2
41 C1
41 C1
58 C1
3 C2
34 C2
E92 22 OR/BK
V7 20 DG/WT
X3 20 BK/RD
G29 20 BK/TN
D1 20 VT/BR
D2 20 WT/BK
TWISTED PAIR
2
WIPER PARK SWITCH SENSE
WIPER MODULE
(8W-53-2)
B
WASHER FLUID SWITCH SENSE
LOW WASHER FLUID SWITCH
(8W-53-3)
PS01
(8W-30-4)
(8W-30-31)
PS02
(8W-30-4)
(8W-30-31)
D1 20 VT/BR
D2 20 WT/BK
TWISTED PAIR
12 C1
DIMMER SWITCH SIGNAL
HEADLAMP SWITCH
(8W-50-9)
(8W-50-10)
1 C2
HORN RELAY CONTROL
CLOCKSPRING
(8W-41-2)
3
11
DATA LINK CONNECTOR
(8W-30-4)
(8W-30-31)

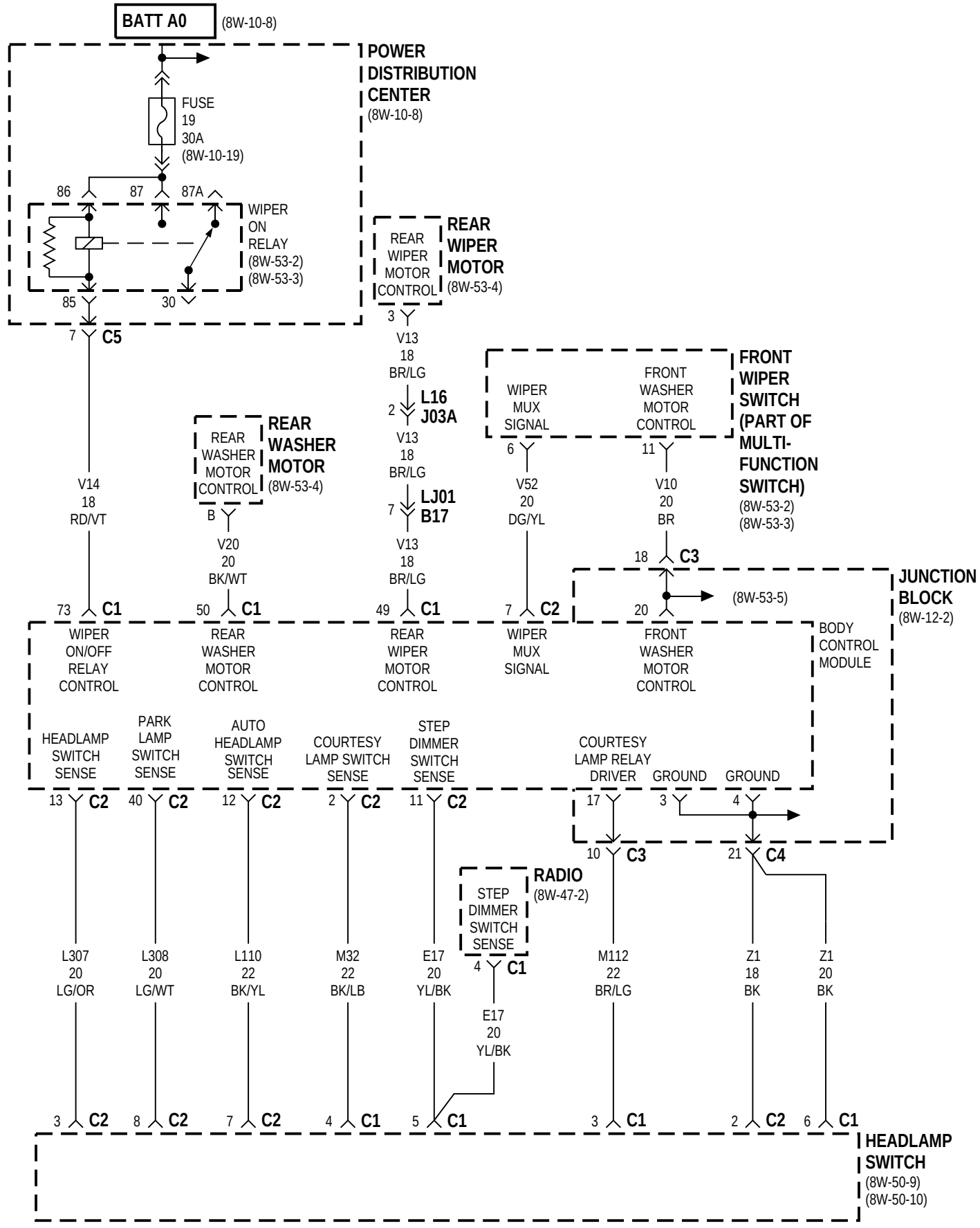
BATT A0
(8W-10-8)
POWER DISTRIBUTION CENTER
(8W-10-8)
FUSE 19 30A
(8W-10-19)
86
87
87A
WIPER ON RELAY
(8W-53-2)
(8W-53-3)
85
30
7 C5
REAR WIPER MOTOR CONTROL
REAR WIPER MOTOR
(8W-53-4)
3
V13 18 BR/LG
2 L16 J03A
V13 18 BR/LG
7 LJ01 B17
V13 18 BR/LG
REAR WASHER MOTOR CONTROL
REAR WASHER MOTOR
(8W-53-4)
B
V20 20 BK/WT
WIPER MUX SIGNAL
FRONT WASHER MOTOR CONTROL
FRONT WIPER SWITCH (PART OF MULTI-FUNCTION SWITCH)
(8W-53-2)
(8W-53-3)
6
V52 20 DG/YL
11
V10 20 BR
18 C3
(8W-53-5)
JUNCTION BLOCK
(8W-12-2)
V14 18 RD/VT
73 C1
50 C1
49 C1
7 C2
20
BODY CONTROL MODULE
WIPER ON/OFF RELAY CONTROL
REAR WASHER MOTOR CONTROL
REAR WIPER MOTOR CONTROL
WIPER MUX SIGNAL
FRONT WASHER MOTOR CONTROL
HEADLAMP SWITCH SENSE
PARK LAMP SWITCH SENSE
AUTO HEADLAMP SWITCH SENSE
COURTESY LAMP SWITCH SENSE
STEP DIMMER SWITCH SENSE
COURTESY LAMP RELAY DRIVER
GROUND
GROUND
13 C2
40 C2
12 C2
2 C2
11 C2
17
3
4
10 C3
21 C4
STEP DIMMER SWITCH SENSE
RADIO
(8W-47-2)
4 C1
E17 20 YL/BK
L307 20 LG/OR
L308 20 LG/WT
L110 22 BK/YL
M32 22 BK/LB
E17 20 YL/BK
M112 22 BR/LG
Z1 18 BK
Z1 20 BK
3 C2
8 C2
7 C2
4 C1
5 C1
3 C1
2 C2
6 C1
HEADLAMP SWITCH
(8W-50-9)
(8W-50-10)

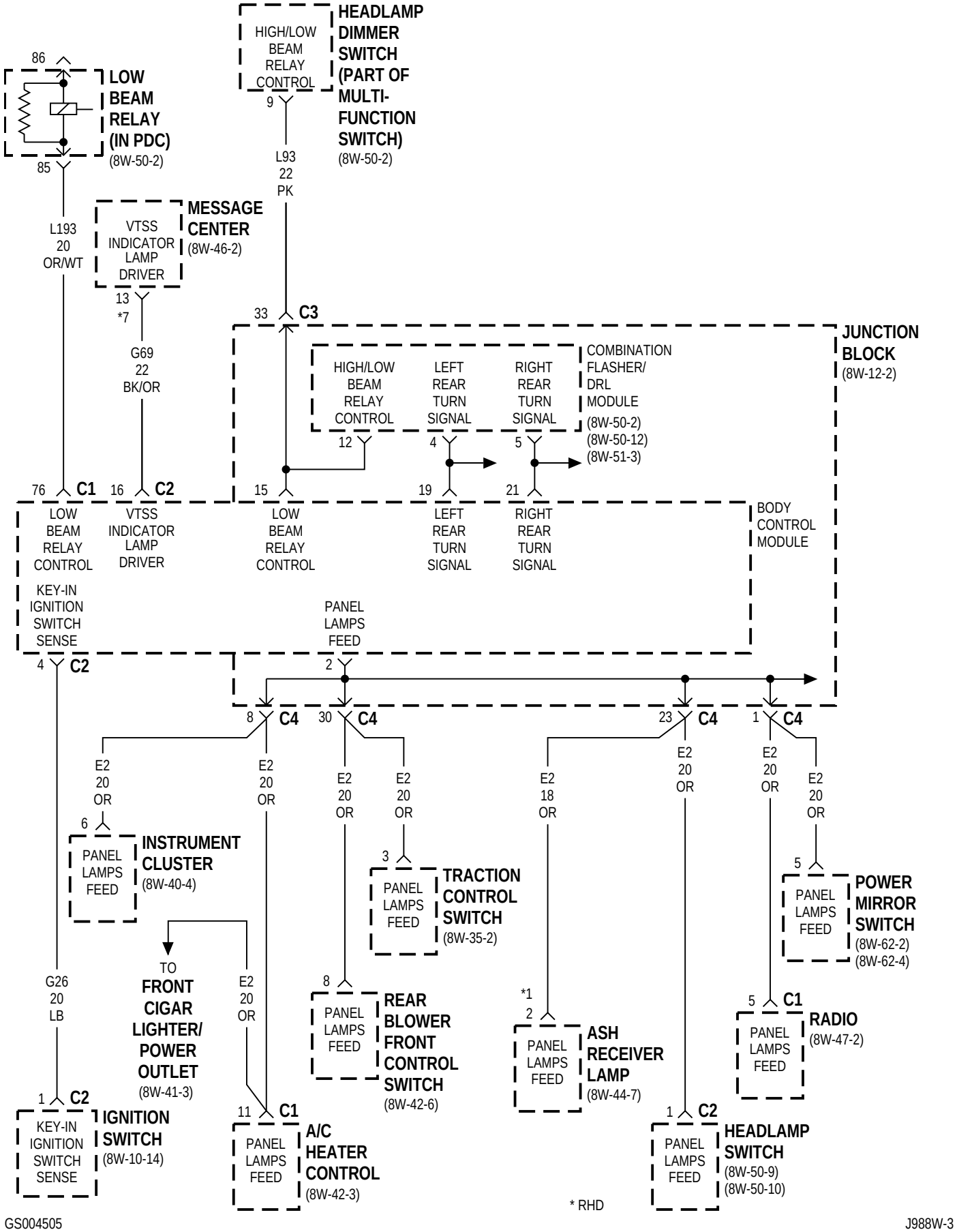
86
LOW BEAM RELAY (IN PDC)
(8W-50-2)
85
L193
20
OR/WT
HIGH/LOW BEAM RELAY CONTROL
9
HEADLAMP DIMMER SWITCH (PART OF MULTI-FUNCTION SWITCH)
(8W-50-2)
L93
22
PK
VTSS INDICATOR LAMP DRIVER
MESSAGE CENTER
(8W-46-2)
13
*7
G69
22
BK/OR
33 C3
JUNCTION BLOCK
(8W-12-2)
HIGH/LOW BEAM RELAY CONTROL
LEFT REAR TURN SIGNAL
RIGHT REAR TURN SIGNAL
COMBINATION FLASHER/ DRL MODULE
(8W-50-2)
(8W-50-12)
(8W-51-3)
12
4
5
76 C1
16 C2
15
19
21
LOW BEAM RELAY CONTROL
VTSS INDICATOR LAMP DRIVER
LOW BEAM RELAY CONTROL
LEFT REAR TURN SIGNAL
RIGHT REAR TURN SIGNAL
BODY CONTROL MODULE
KEY-IN IGNITION SWITCH SENSE
PANEL LAMPS FEED
4 C2
2
8 C4
30 C4
23 C4
1 C4
E2 20 OR
E2 18 OR
6
PANEL LAMPS FEED
INSTRUMENT CLUSTER
(8W-40-4)
3
TRACTION CONTROL SWITCH
(8W-35-2)
5
POWER MIRROR SWITCH
(8W-62-2)
(8W-62-4)
G26
20
LB
TO FRONT CIGAR LIGHTER/ POWER OUTLET
(8W-41-3)
8
REAR BLOWER FRONT CONTROL SWITCH
(8W-42-6)
*1
2
ASH RECEIVER LAMP
(8W-44-7)
5 C1
RADIO
(8W-47-2)
1 C2
IGNITION SWITCH
(8W-10-14)
11 C1
A/C HEATER CONTROL
(8W-42-3)
1 C2
HEADLAMP SWITCH
(8W-50-9)
(8W-50-10)
* RHD

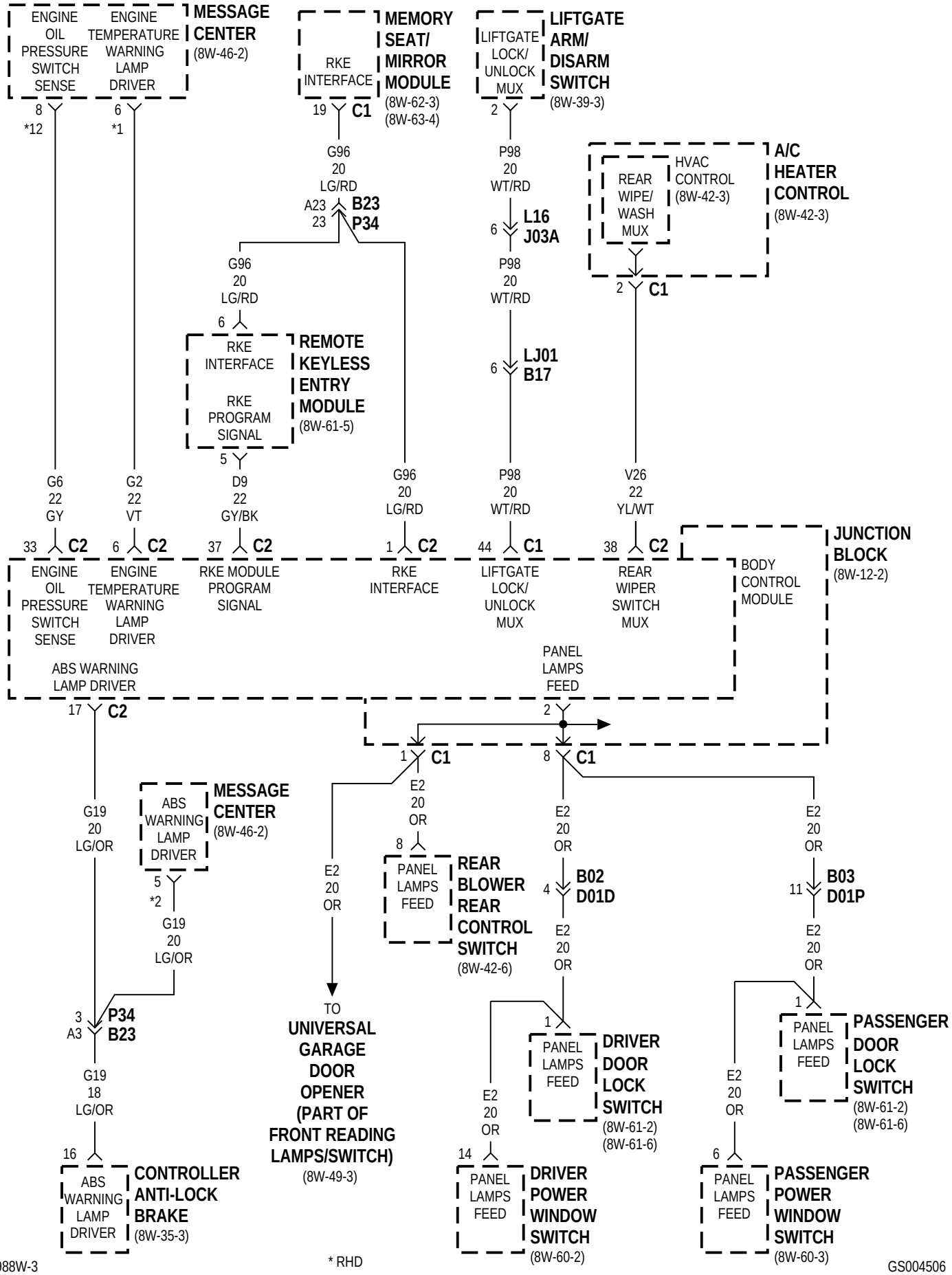
ENGINE OIL PRESSURE SWITCH SENSE
ENGINE TEMPERATURE WARNING LAMP DRIVER
MESSAGE CENTER
(8W-46-2)
8 *12
6 *1
RKE INTERFACE
MEMORY SEAT/ MIRROR MODULE
(8W-62-3)
(8W-63-4)
19 C1
LIFTGATE LOCK/ UNLOCK MUX
LIFTGATE ARM/ DISARM SWITCH
(8W-39-3)
2
G96 20 LG/RD
A23 23 B23 P34
P98 20 WT/RD
6 L16 J03A
P98 20 WT/RD
6 LJ01 B17
REAR WIPE/ WASH MUX
HVAC CONTROL
(8W-42-3)
A/C HEATER CONTROL
(8W-42-3)
2 C1
G96 20 LG/RD
6
RKE INTERFACE
RKE PROGRAM SIGNAL
REMOTE KEYLESS ENTRY MODULE
(8W-61-5)
5
G6 22 GY
G2 22 VT
D9 22 GY/BK
G96 20 LG/RD
P98 20 WT/RD
V26 22 YL/WT
33 C2
6 C2
37 C2
1 C2
44 C1
38 C2
ENGINE OIL PRESSURE SWITCH SENSE
ENGINE TEMPERATURE WARNING LAMP DRIVER
RKE MODULE PROGRAM SIGNAL
RKE INTERFACE
LIFTGATE LOCK/ UNLOCK MUX
REAR WIPER SWITCH MUX
BODY CONTROL MODULE
JUNCTION BLOCK
(8W-12-2)
ABS WARNING LAMP DRIVER
17 C2
PANEL LAMPS FEED
2
1 C1
8 C1
G19 20 LG/OR
ABS WARNING LAMP DRIVER
MESSAGE CENTER
(8W-46-2)
5 *2
G19 20 LG/OR
E2 20 OR
8
PANEL LAMPS FEED
REAR BLOWER REAR CONTROL SWITCH
(8W-42-6)
E2 20 OR
4 B02 D01D
E2 20 OR
11 B03 D01P
E2 20 OR
3 A3 P34 B23
G19 18 LG/OR
16
ABS WARNING LAMP DRIVER
CONTROLLER ANTI-LOCK BRAKE
(8W-35-3)
TO UNIVERSAL GARAGE DOOR OPENER (PART OF FRONT READING LAMPS/SWITCH)
(8W-49-3)
E2 20 OR
1
PANEL LAMPS FEED
DRIVER DOOR LOCK SWITCH
(8W-61-2)
(8W-61-6)
E2 20 OR
1
PANEL LAMPS FEED
PASSENGER DOOR LOCK SWITCH
(8W-61-2)
(8W-61-6)
E2 20 OR
14
PANEL LAMPS FEED
DRIVER POWER WINDOW SWITCH
(8W-60-2)
E2 20 OR
6
PANEL LAMPS FEED
PASSENGER POWER WINDOW SWITCH
(8W-60-3)

* RHD

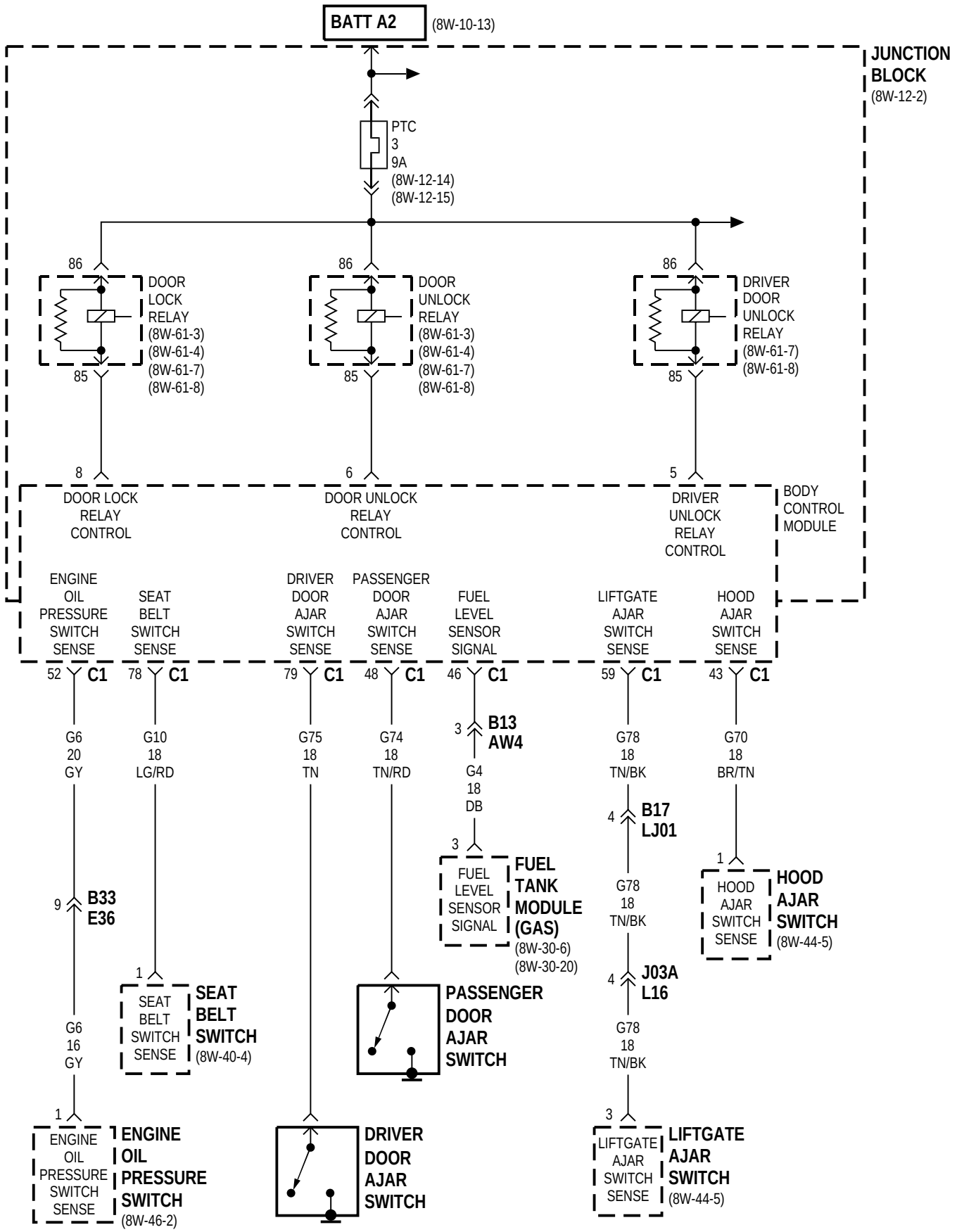
BATT A2
(8W-10-13)
JUNCTION BLOCK
(8W-12-2)
PTC
3
9A
(8W-12-14)
(8W-12-15)
86
DOOR LOCK RELAY
(8W-61-3)
(8W-61-4)
(8W-61-7)
(8W-61-8)
85
86
DOOR UNLOCK RELAY
(8W-61-3)
(8W-61-4)
(8W-61-7)
(8W-61-8)
85
86
DRIVER DOOR UNLOCK RELAY
(8W-61-7)
(8W-61-8)
85
8
DOOR LOCK RELAY CONTROL
6
DOOR UNLOCK RELAY CONTROL
5
DRIVER UNLOCK RELAY CONTROL
BODY CONTROL MODULE
ENGINE OIL PRESSURE SWITCH SENSE
SEAT BELT SWITCH SENSE
DRIVER DOOR AJAR SWITCH SENSE
PASSENGER DOOR AJAR SWITCH SENSE
FUEL LEVEL SENSOR SIGNAL
LIFTGATE AJAR SWITCH SENSE
HOOD AJAR SWITCH SENSE
52 C1
78 C1
79 C1
48 C1
46 C1
59 C1
43 C1
G6 20 GY
G10 18 LG/RD
G75 18 TN
G74 18 TN/RD
3 B13 AW4
G4 18 DB
G78 18 TN/BK
G70 18 BR/TN
4 B17 LJ01
9 B33 E36
G6 16 GY
1
SEAT BELT SWITCH SENSE
SEAT BELT SWITCH
(8W-40-4)
3
FUEL LEVEL SENSOR SIGNAL
FUEL TANK MODULE (GAS)
(8W-30-6)
(8W-30-20)
PASSENGER DOOR AJAR SWITCH
G78 18 TN/BK
4 J03A L16
G78 18 TN/BK
1
HOOD AJAR SWITCH SENSE
HOOD AJAR SWITCH
(8W-44-5)
1
ENGINE OIL PRESSURE SWITCH SENSE
ENGINE OIL PRESSURE SWITCH
(8W-46-2)
DRIVER DOOR AJAR SWITCH
3
LIFTGATE AJAR SWITCH SENSE
LIFTGATE AJAR SWITCH
(8W-44-5)

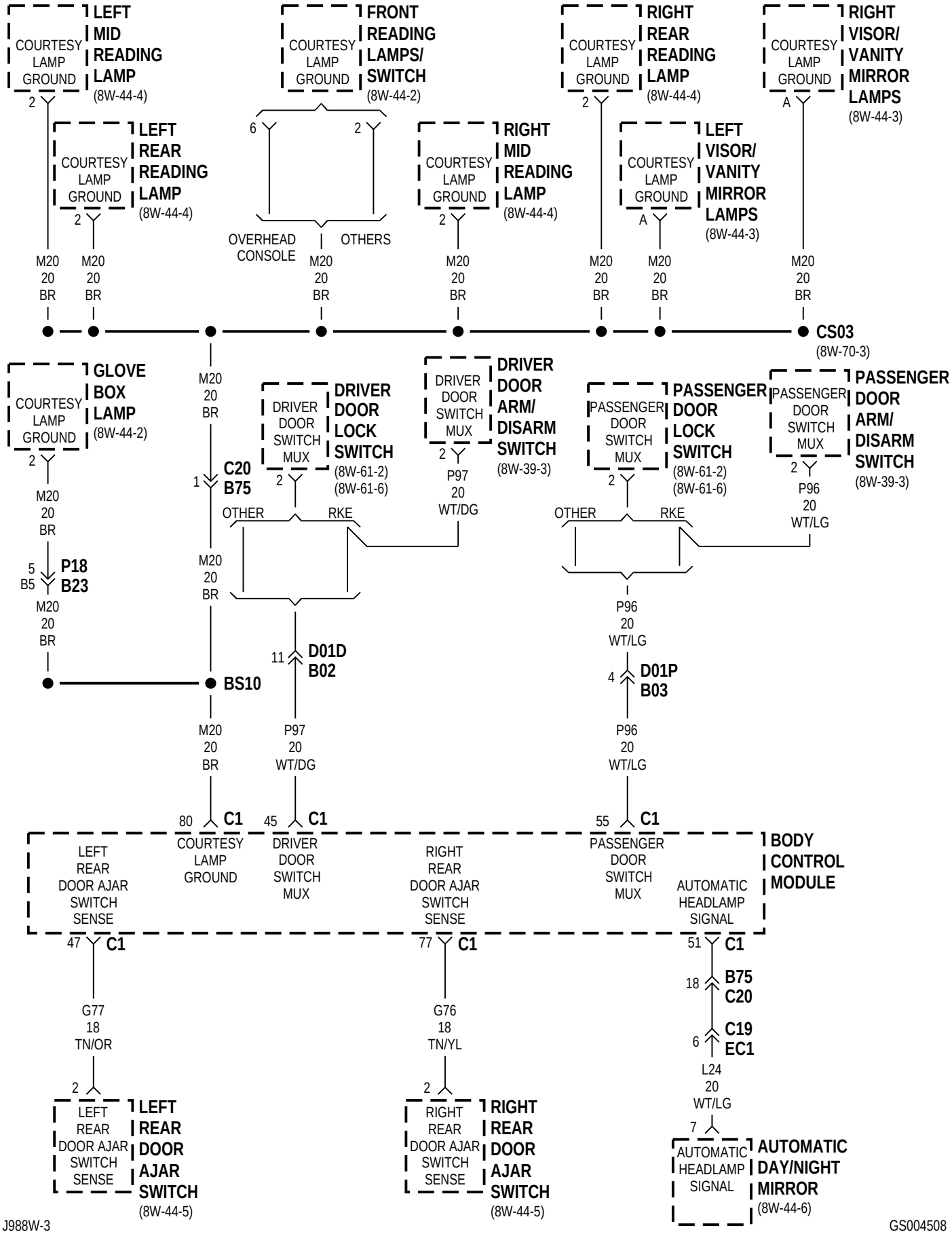

J988W-3

GS004508

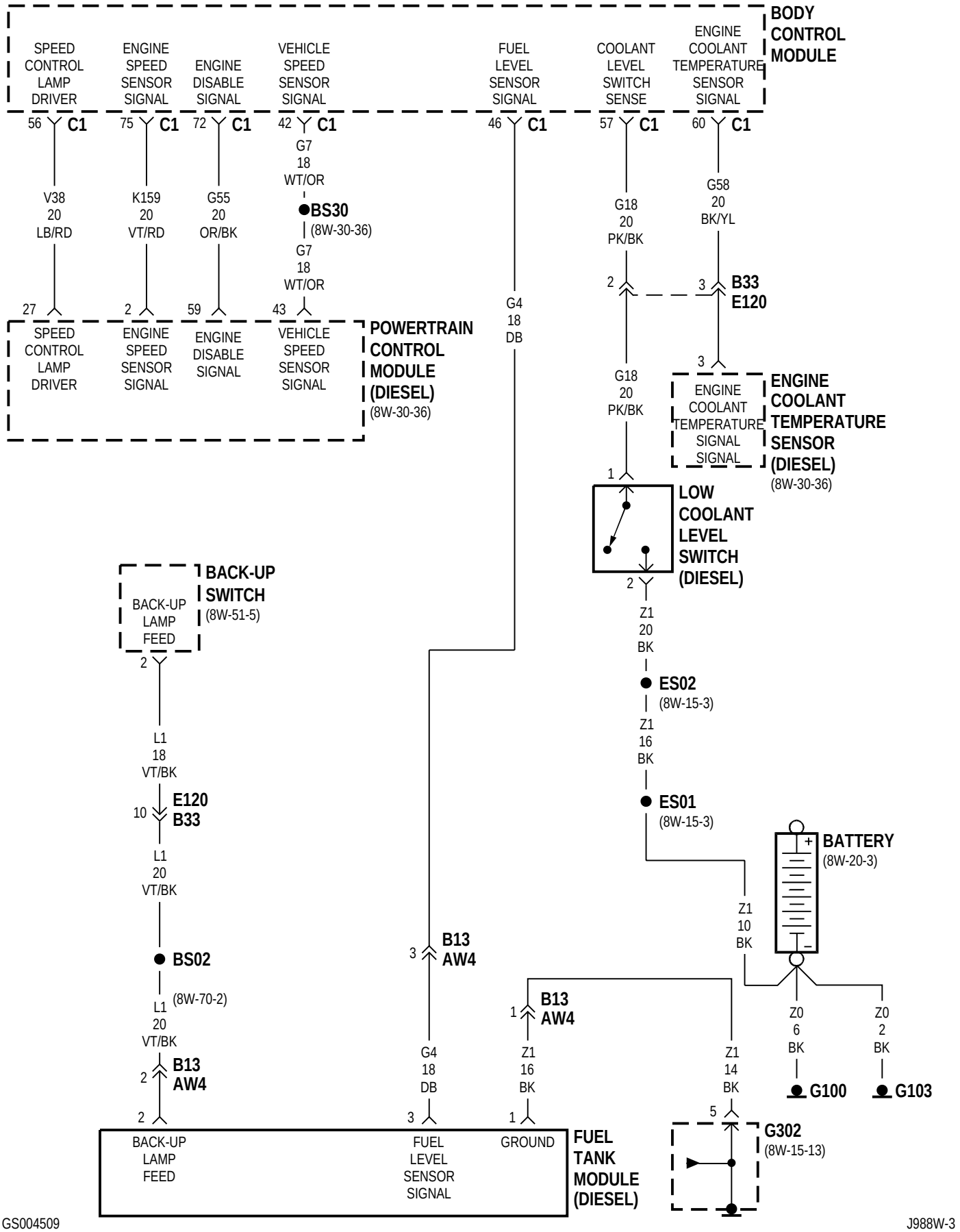

GS004509

J988W-3

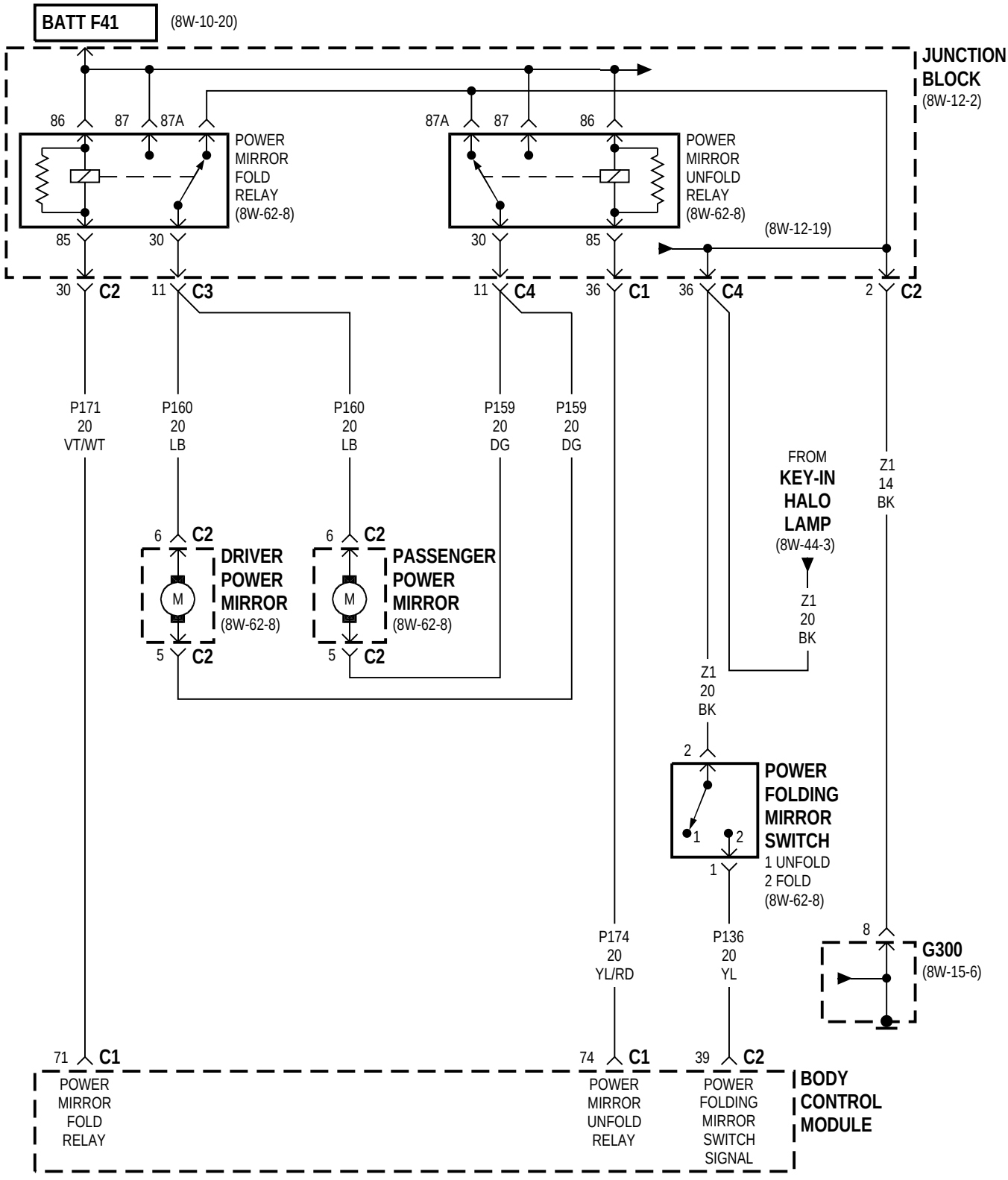
BATT F41
(8W-10-20)
JUNCTION BLOCK
(8W-12-2)
86
87
87A
POWER MIRROR FOLD RELAY
(8W-62-8)
87A
87
86
POWER MIRROR UNFOLD RELAY
(8W-62-8)
85
30
30
85
(8W-12-19)
30 C2
11 C3
11 C4
36 C1
36 C4
2 C2
P171 20 VT/WT
P160 20 LB
P160 20 LB
P159 20 DG
P159 20 DG
FROM KEY-IN HALO LAMP
(8W-44-3)
Z1 14 BK
Z1 20 BK
6 C2
DRIVER POWER MIRROR
(8W-62-8)
6 C2
PASSENGER POWER MIRROR
(8W-62-8)
5 C2
5 C2
Z1 20 BK
2
POWER FOLDING MIRROR SWITCH
1 UNFOLD
2 FOLD
(8W-62-8)
1
1
2
8
G300
(8W-15-6)
P174 20 YL/RD
P136 20 YL
71 C1
74 C1
39 C2
POWER MIRROR FOLD RELAY
POWER MIRROR UNFOLD RELAY
POWER FOLDING MIRROR SWITCH SIGNAL
BODY CONTROL MODULE

8W-46 MESSAGE CENTER

Component	Page
A/C Heater Control	8W-46-2, 3
ABS Warning Lamp	8W-46-2
Airbag Control Module	8W-46-2
Airbag Warning Lamp	8W-46-2
Body Control Module	8W-46-2, 4, 5
Brake Pressure Switch	8W-46-3
Brake Warning Lamp	8W-46-3
Combination Flasher/DRL Module	8W-46-3, 4, 5
Controller Anti-Lock Brake	8W-46-2
Engine Coolant Temperature Lamp	8W-46-2
Engine Oil Pressure Switch	8W-46-2
Fuse 5 (PDC)	8W-46-4
Fuse 6 (JB)	8W-46-2, 3
Fuse 28 (PDC)	8W-46-2
G200	8W-46-3, 4, 5
G300	8W-46-3, 4, 5
Glow Plug Lamp	8W-46-3
Headlamp Dimmer Switch	8W-46-4
High Beam Indicator	8W-46-4
High Beam Relay	8W-46-4
Ignition Switch	8W-46-3
Junction Block	8W-46-2, 3, 4, 5
Left Rear Lamp Assembly	8W-46-5
Left Repeater Lamp	8W-46-5
Left Turn Indicator	8W-46-5
Low Beam Relay	8W-46-4
Low Oil Pressure Lamp	8W-46-2
Memory Seat/Mirror Module	8W-46-2
Message Center	8W-46-2, 3, 4, 5
Park Brake Switch	8W-46-3
Power Distribution Center	8W-46-2, 4
Powertrain Control Module	8W-46-3
Remote Keyless Entry Module	8W-46-2
Right Rear Lamp Assembly	8W-46-5
Right Repeater Lamp	8W-46-5
Right Turn Indicator	8W-46-5
Service Engine Soon Lamp	8W-46-3
Turn Signal/Hazard Switch	8W-46-5
VTSS Lamp	8W-46-2

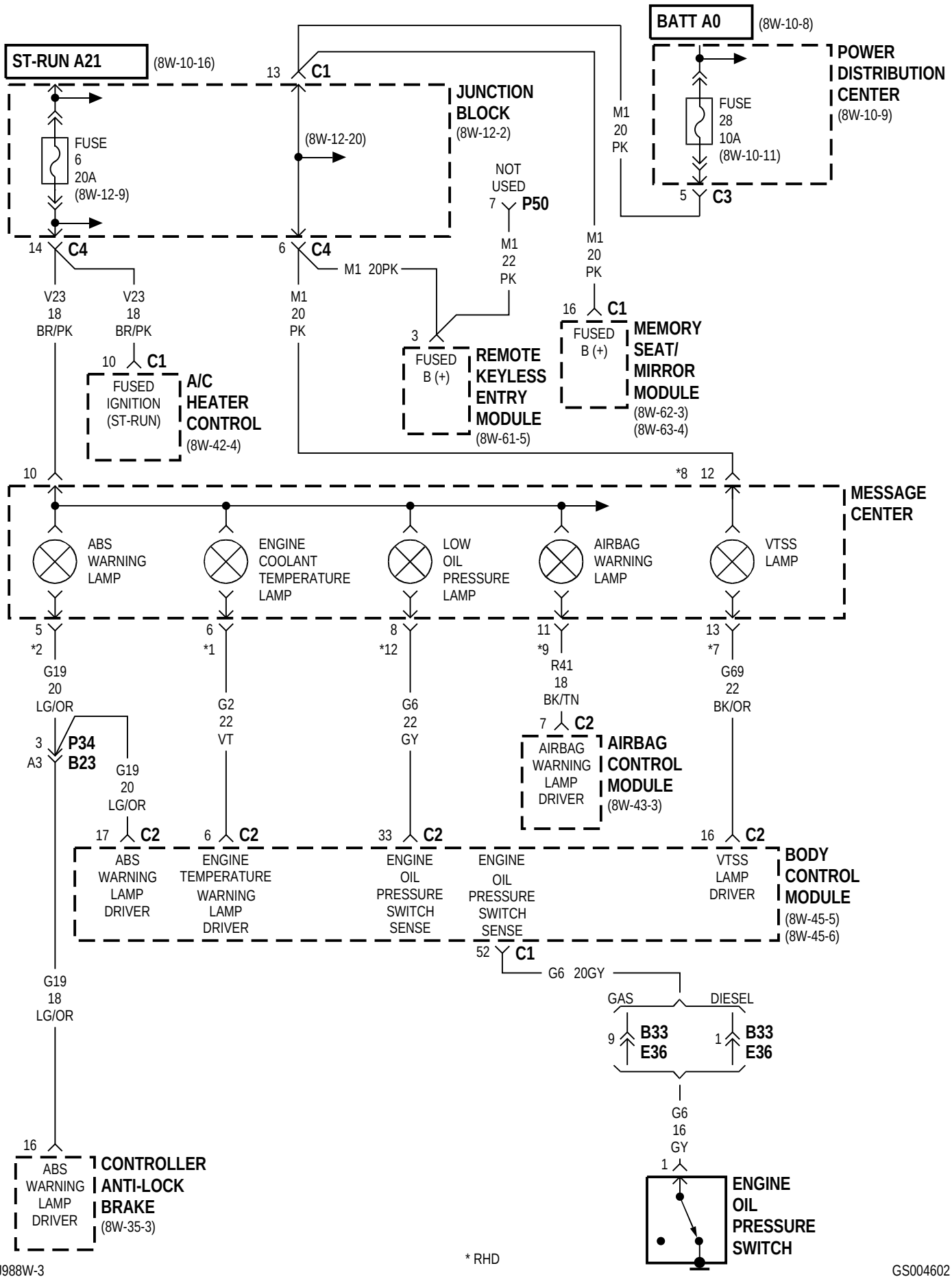
BATT A0
(8W-10-8)
ST-RUN A21
(8W-10-16)
POWER DISTRIBUTION CENTER
(8W-10-9)
FUSE 28 10A (8W-10-11)
FUSE 6 20A (8W-12-9)
JUNCTION BLOCK
(8W-12-2)
(8W-12-20)
NOT USED
P50
M1 20 PK
M1 22 PK
M1 20PK
V23 18 BR/PK
V23 18 BR/PK
M1 20 PK
FUSED IGNITION (ST-RUN)
A/C HEATER CONTROL
(8W-42-4)
FUSED B (+)
REMOTE KEYLESS ENTRY MODULE
(8W-61-5)
FUSED B (+)
MEMORY SEAT/ MIRROR MODULE
(8W-62-3)
(8W-63-4)
MESSAGE CENTER
ABS WARNING LAMP
ENGINE COOLANT TEMPERATURE LAMP
LOW OIL PRESSURE LAMP
AIRBAG WARNING LAMP
VTSS LAMP
G19 20 LG/OR
G2 22 VT
G6 22 GY
R41 18 BK/TN
G69 22 BK/OR
P34 B23
AIRBAG WARNING LAMP DRIVER
AIRBAG CONTROL MODULE
(8W-43-3)
ABS WARNING LAMP DRIVER
ENGINE TEMPERATURE WARNING LAMP DRIVER
ENGINE OIL PRESSURE SWITCH SENSE
ENGINE OIL PRESSURE SWITCH SENSE
VTSS LAMP DRIVER
BODY CONTROL MODULE
(8W-45-5)
(8W-45-6)
G6 20GY
G19 18 LG/OR
GAS
DIESEL
B33 E36
B33 E36
G6 16 GY
ABS WARNING LAMP DRIVER
CONTROLLER ANTI-LOCK BRAKE
(8W-35-3)
ENGINE OIL PRESSURE SWITCH

* RHD

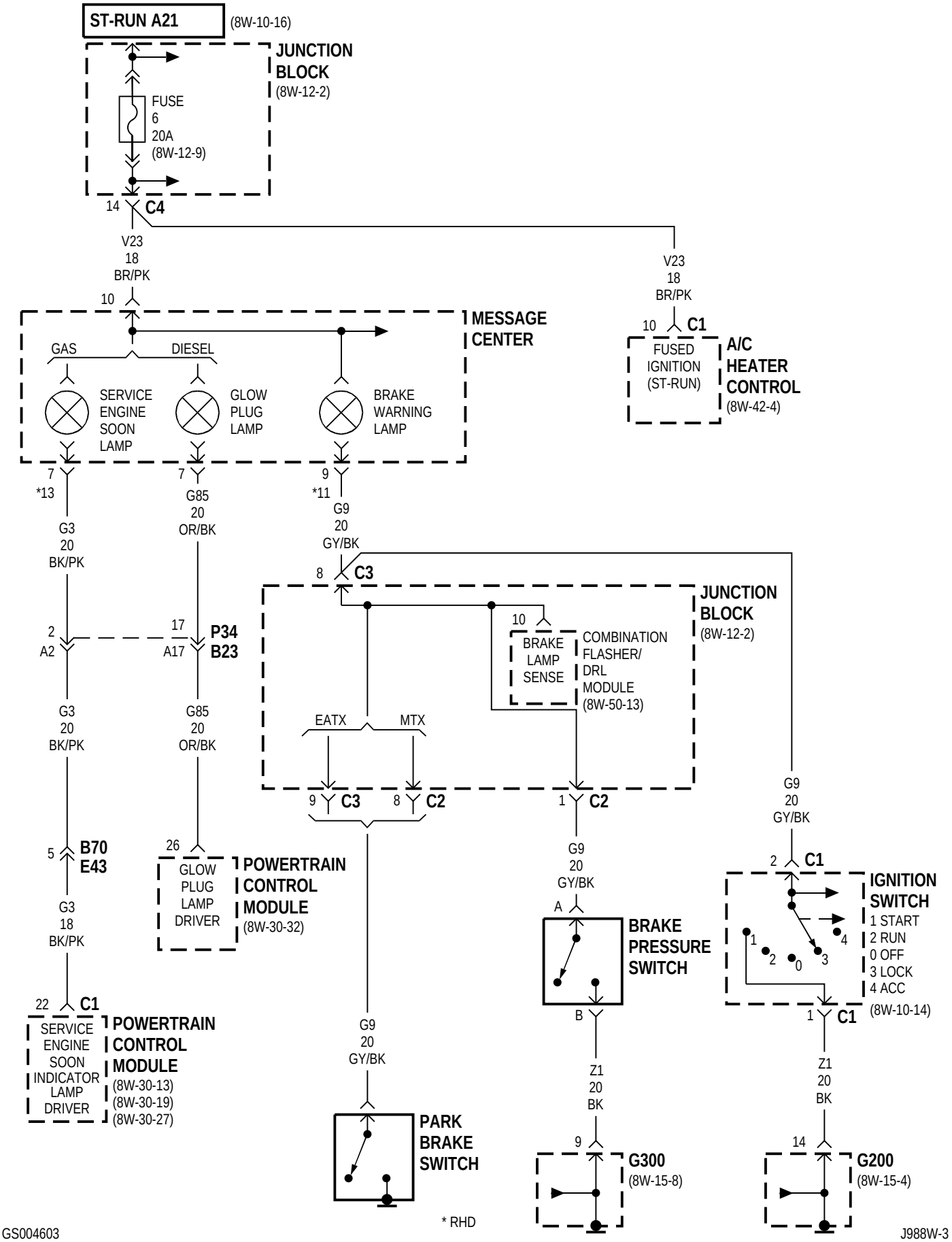

GS004603

J988W-3

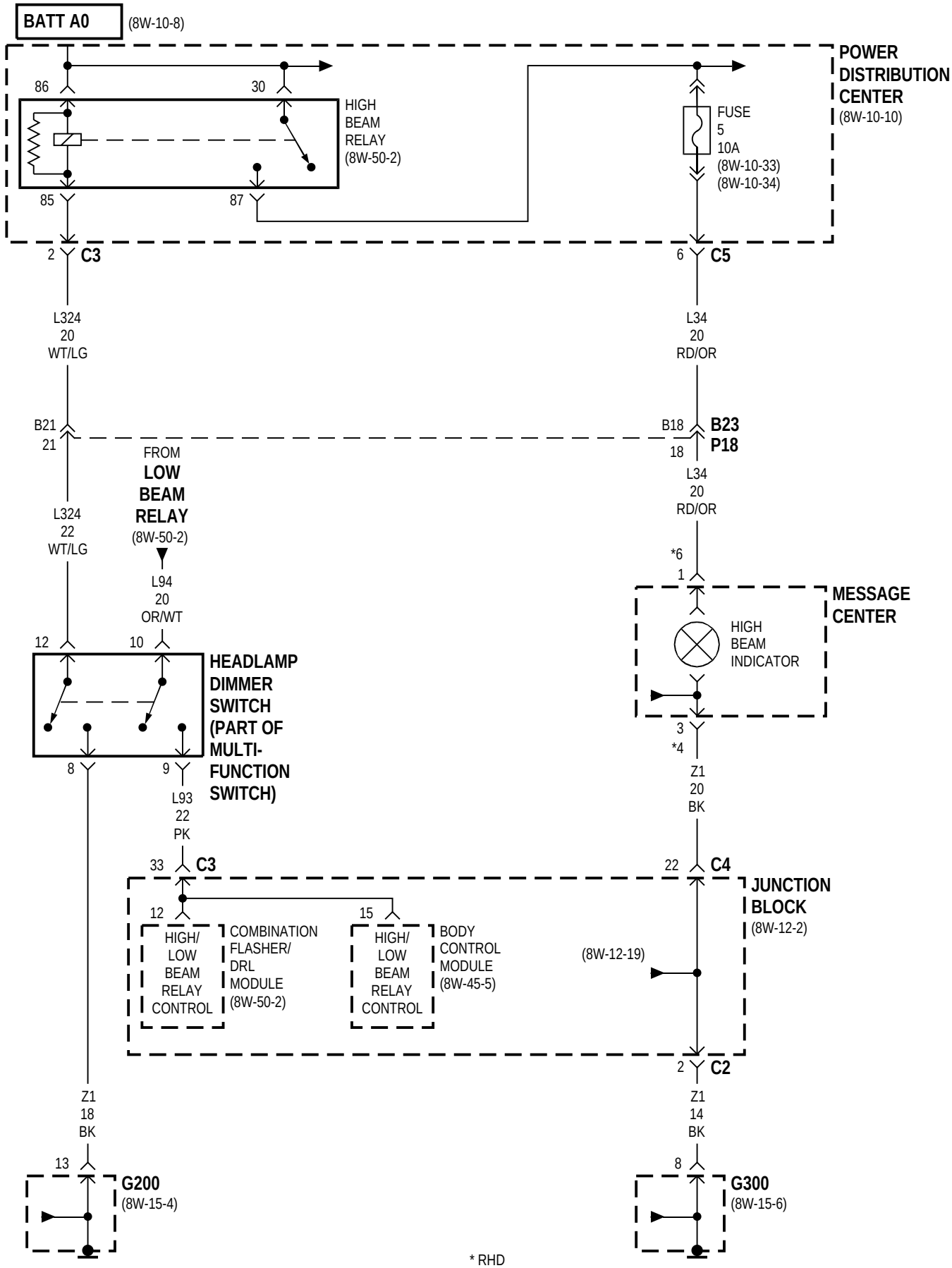
BATT A0
(8W-10-8)
POWER DISTRIBUTION CENTER
(8W-10-10)
86
30
HIGH BEAM RELAY
(8W-50-2)
85
87
FUSE 5 10A
(8W-10-33)
(8W-10-34)
2
C3
6
C5
L324 20 WT/LG
L34 20 RD/OR
B21 21
B18
B23 P18
18
FROM LOW BEAM RELAY
(8W-50-2)
L324 22 WT/LG
L94 20 OR/WT
L34 20 RD/OR
*6
1
MESSAGE CENTER
HIGH BEAM INDICATOR
12
10
HEADLAMP DIMMER SWITCH (PART OF MULTI-FUNCTION SWITCH)
3
*4
8
9
L93 22 PK
Z1 20 BK
33
C3
22
C4
JUNCTION BLOCK
(8W-12-2)
12
15
HIGH/ LOW BEAM RELAY CONTROL
COMBINATION FLASHER/ DRL MODULE
(8W-50-2)
HIGH/ LOW BEAM RELAY CONTROL
BODY CONTROL MODULE
(8W-45-5)
(8W-12-19)
2
C2
Z1 18 BK
Z1 14 BK
13
8
G200
(8W-15-4)
G300
(8W-15-6)

* RHD

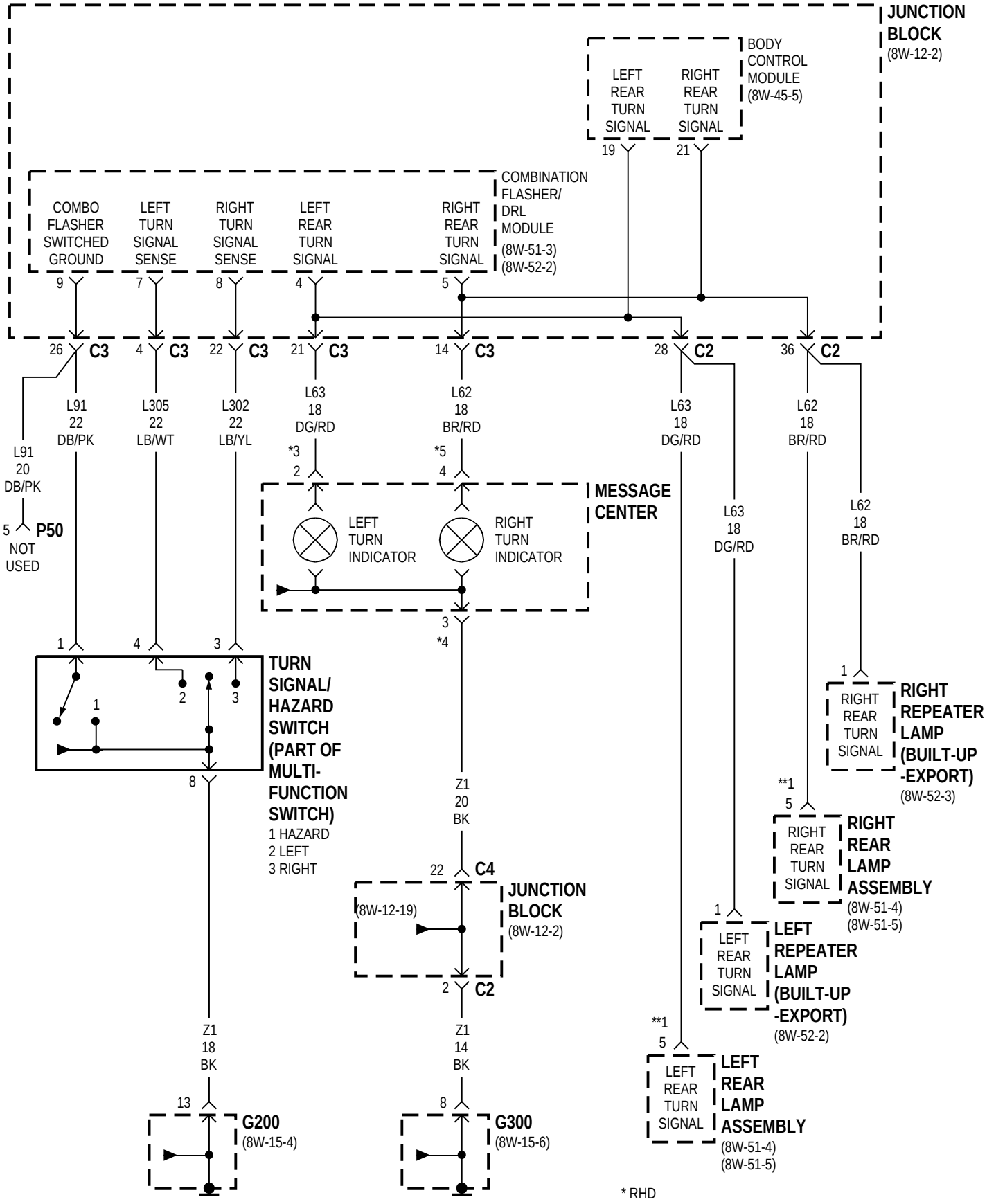

* RHD
** EXCEPT BUILT-UP-EXPORT

8W-47 AUDIO SYSTEM

Component	Page
Body Control Module	8W-47-2
BS03	8W-47-4, 5, 6, 7
Bs08	8W-47-5, 6, 7
Data Link Connector	8W-47-2
Fuse 8 (JB)	8W-47-2, 4
Fuse 28 (PDC)	8W-47-2
G202	8W-47-2, 5, 6, 7
G300	8W-47-4
Headlamp Switch	8W-47-2
Junction Block	8W-47-2, 4
Left Door Speaker	8W-47-4, 6, 7
Left Front Panel Speaker	8W-47-6, 7
Left Front Speaker	8W-47-3
Left Rear Pillar Speaker	8W-47-5
Left Rear Speaker	8W-47-3, 4, 5
Memory Seat/Mirror Module	8W-47-2
Name Brand Speaker Relay	8W-47-4
Power Distribution Center	8W-47-2
Power Mirror Switch	8W-47-2
PS01	8W-47-2
PS02	8W-47-2
Radio	8W-47-2, 3, 4, 5, 6, 7
Radio Choke	8W-47-4, 5, 6, 7
Right Door Speaker	8W-47-4, 6, 7
Right Front Panel Speaker	8W-47-6, 7
Right Front Speaker	8W-47-3
Right Rear Pillar Speaker	8W-47-5
Right Rear Speaker	8W-47-3, 4, 5

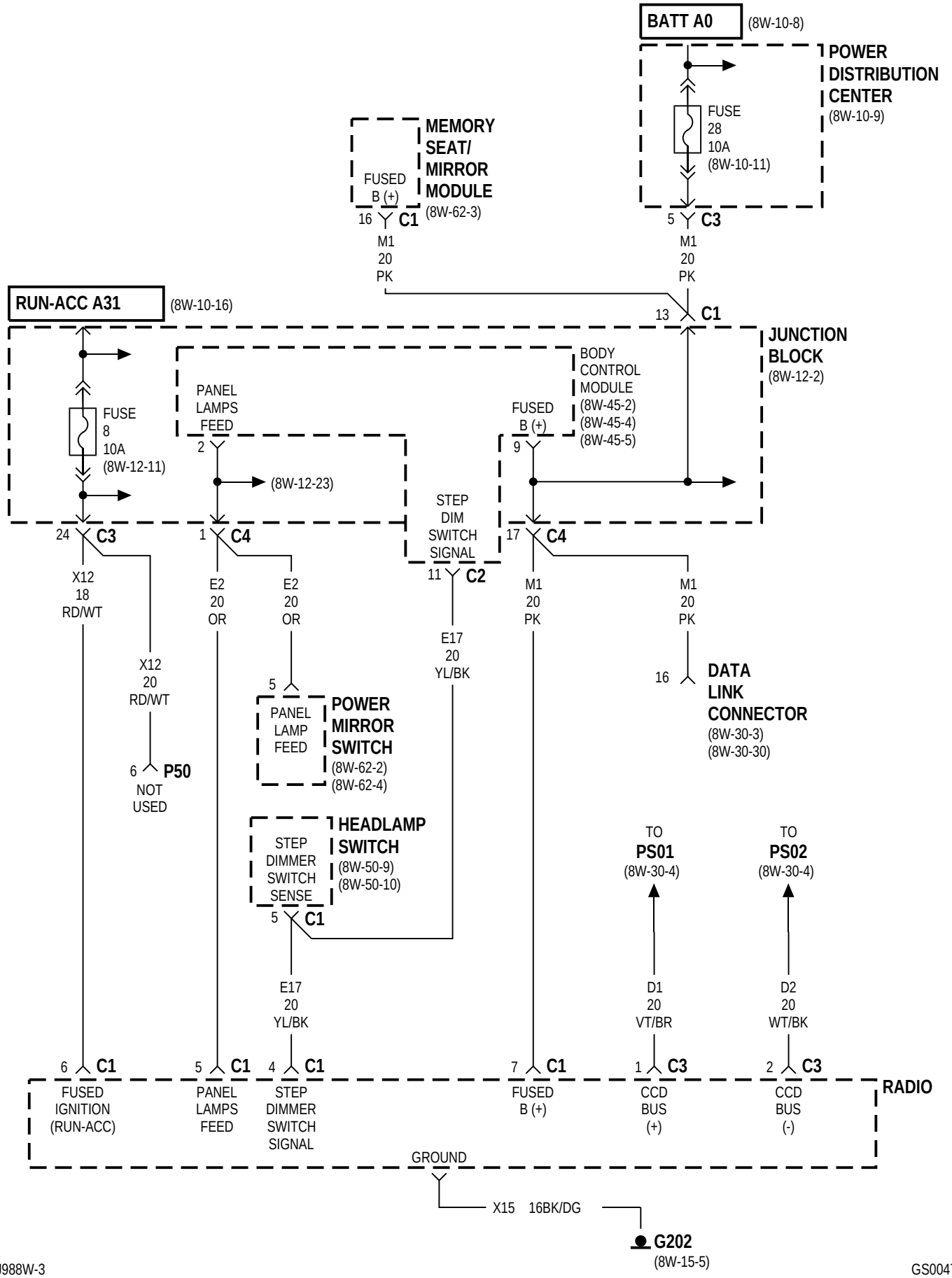
BATT A0
(8W-10-8)
POWER DISTRIBUTION CENTER
(8W-10-9)
FUSE 28 10A
(8W-10-11)
5 C3
M1 20 PK
MEMORY SEAT/ MIRROR MODULE
(8W-62-3)
FUSED B (+)
16 C1
M1 20 PK
RUN-ACC A31
(8W-10-16)
13 C1
JUNCTION BLOCK
(8W-12-2)
BODY CONTROL MODULE
(8W-45-2)
(8W-45-4)
(8W-45-5)
FUSE 8 10A
(8W-12-11)
PANEL LAMPS FEED
2
(8W-12-23)
FUSED B (+)
9
STEP DIM SWITCH SIGNAL
11 C2
24 C3
1 C4
17 C4
X12 18 RD/WT
E2 20 OR
E2 20 OR
E17 20 YL/BK
M1 20 PK
M1 20 PK
X12 20 RD/WT
6 P50
NOT USED
5
PANEL LAMP FEED
POWER MIRROR SWITCH
(8W-62-2)
(8W-62-4)
16
DATA LINK CONNECTOR
(8W-30-3)
(8W-30-30)
STEP DIMMER SWITCH SENSE
5 C1
HEADLAMP SWITCH
(8W-50-9)
(8W-50-10)
TO PS01
(8W-30-4)
TO PS02
(8W-30-4)
E17 20 YL/BK
D1 20 VT/BR
D2 20 WT/BK
6 C1
5 C1
4 C1
7 C1
1 C3
2 C3
FUSED IGNITION (RUN-ACC)
PANEL LAMPS FEED
STEP DIMMER SWITCH SIGNAL
FUSED B (+)
CCD BUS (+)
CCD BUS (-)
RADIO
GROUND
X15 16BK/DG
G202
(8W-15-5)

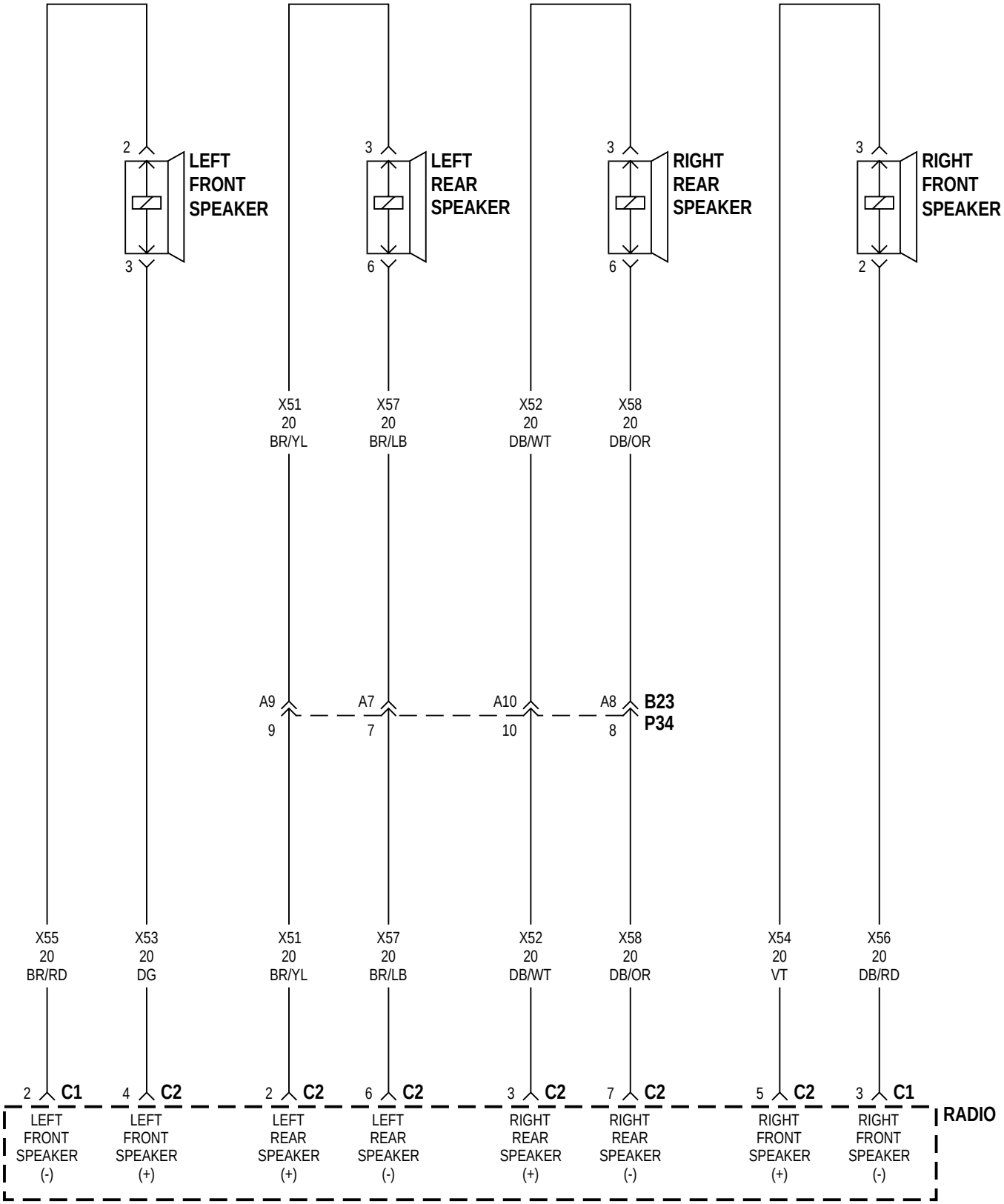
2
LEFT FRONT SPEAKER
3
3
LEFT REAR SPEAKER
6
3
RIGHT REAR SPEAKER
6
3
RIGHT FRONT SPEAKER
2
X51 20 BR/YL
X57 20 BR/LB
X52 20 DB/WT
X58 20 DB/OR
A9
9
A7
7
A10
10
A8
8
B23
P34
X55 20 BR/RD
X53 20 DG
X51 20 BR/YL
X57 20 BR/LB
X52 20 DB/WT
X58 20 DB/OR
X54 20 VT
X56 20 DB/RD
2 C1
4 C2
2 C2
6 C2
3 C2
7 C2
5 C2
3 C1
RADIO
LEFT FRONT SPEAKER (-)
LEFT FRONT SPEAKER (+)
LEFT REAR SPEAKER (+)
LEFT REAR SPEAKER (-)
RIGHT REAR SPEAKER (+)
RIGHT REAR SPEAKER (-)
RIGHT FRONT SPEAKER (+)
RIGHT FRONT SPEAKER (-)

PREMIUM

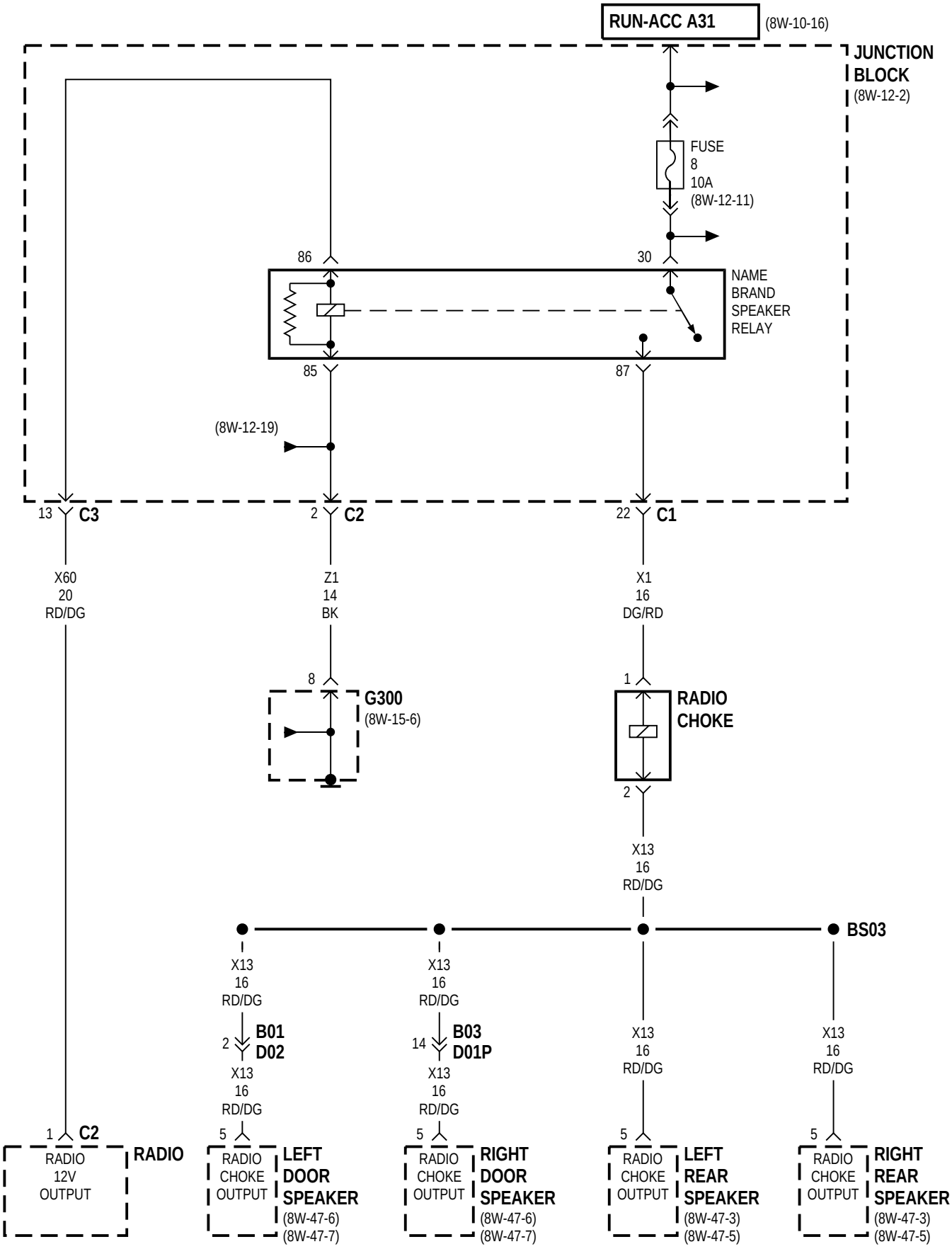
RUN-ACC A31
(8W-10-16)
JUNCTION BLOCK
(8W-12-2)
FUSE
8
10A
(8W-12-11)
86
30
NAME
BRAND
SPEAKER
RELAY
85
87
(8W-12-19)
13
C3
2
C2
22
C1
X60
20
RD/DG
Z1
14
BK
X1
16
DG/RD
8
G300
(8W-15-6)
1
RADIO
CHOKE
2
X13
16
RD/DG
BS03
X13
16
RD/DG
2
B01
D02
14
B03
D01P
1
C2
RADIO
12V
OUTPUT
RADIO
5
RADIO
CHOKE
OUTPUT
LEFT
DOOR
SPEAKER
(8W-47-6)
(8W-47-7)
RIGHT
DOOR
SPEAKER
(8W-47-6)
(8W-47-7)
LEFT
REAR
SPEAKER
(8W-47-3)
(8W-47-5)
RIGHT
REAR
SPEAKER
(8W-47-3)
(8W-47-5)

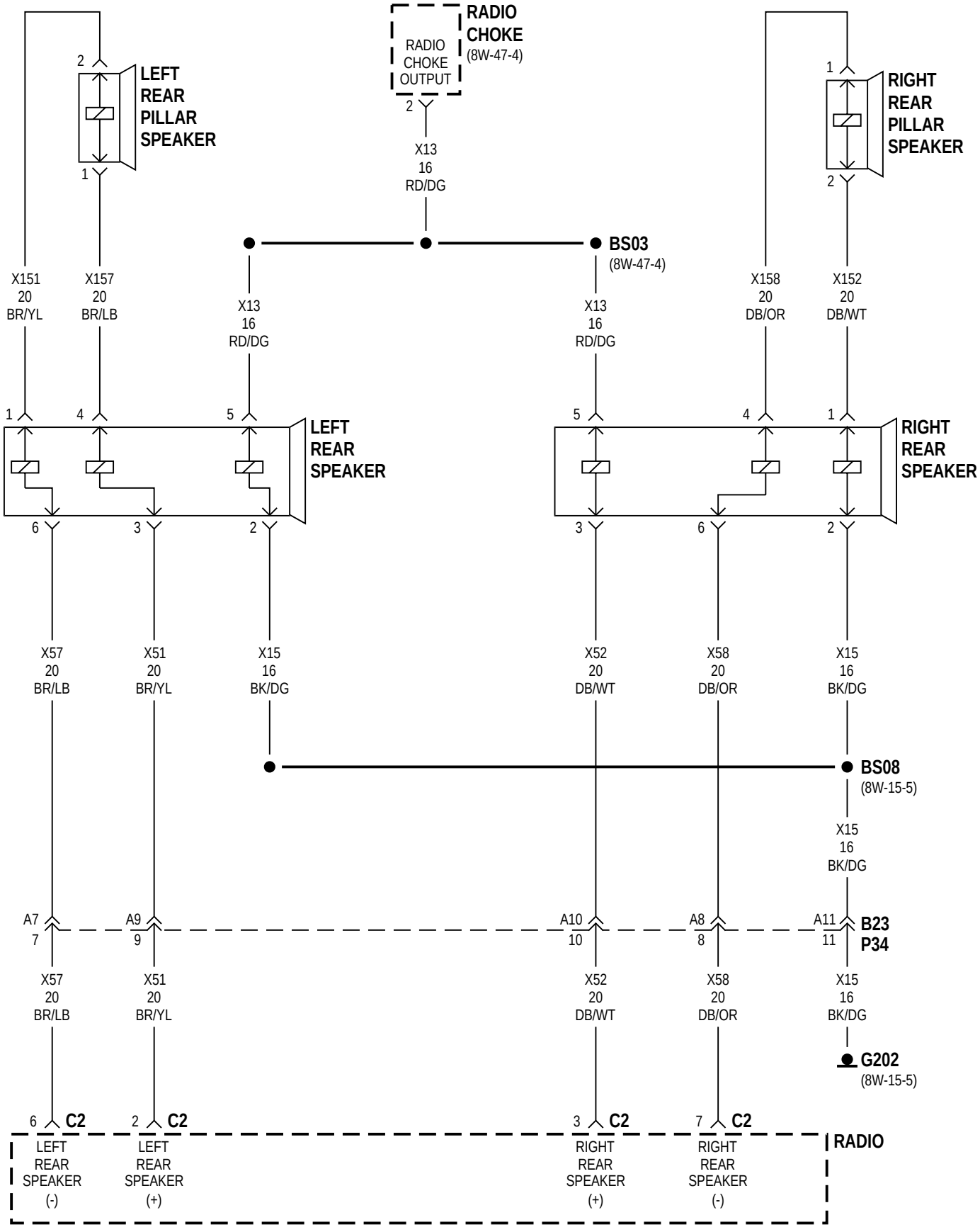

GS004705

J988W-3

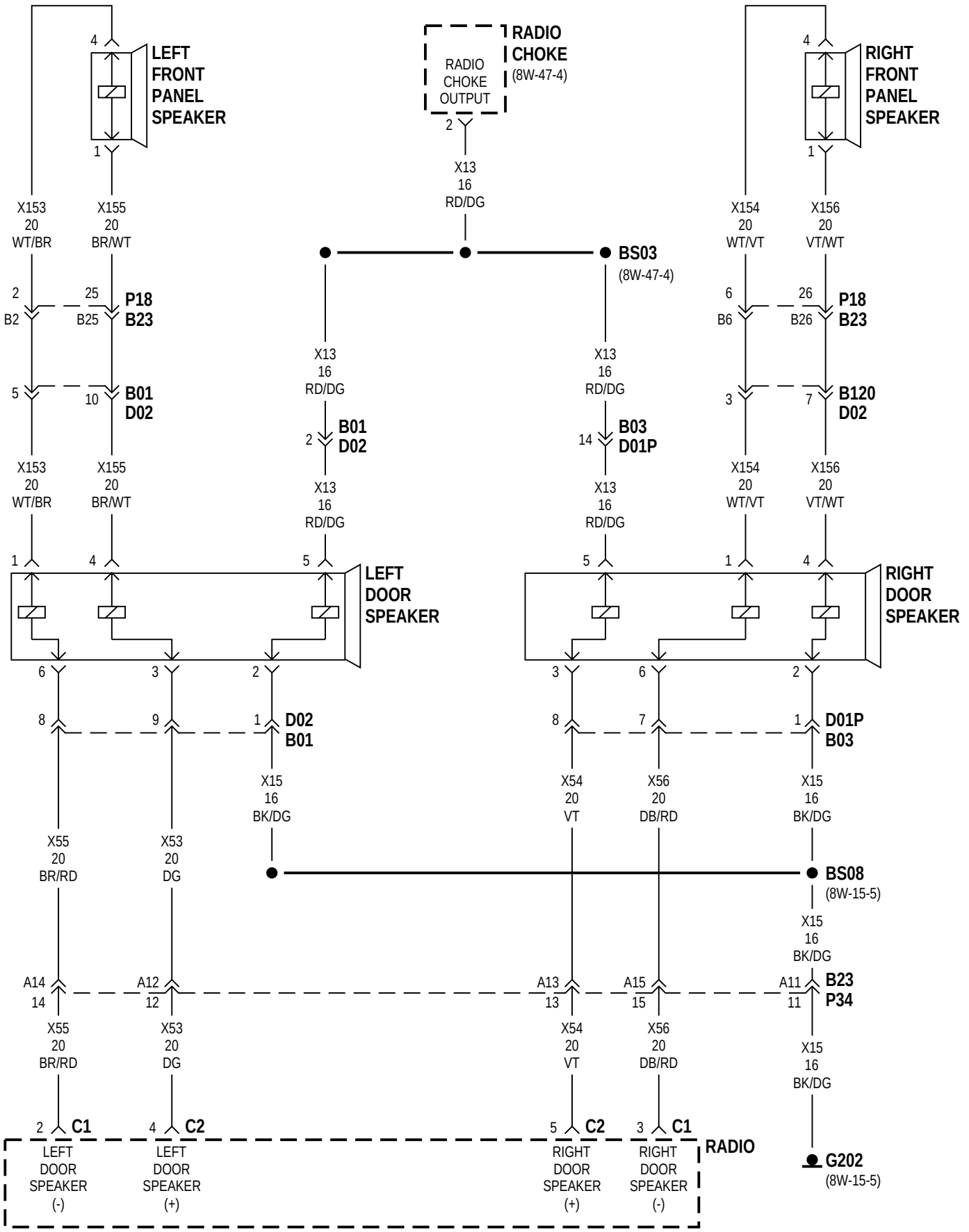
LEFT FRONT PANEL SPEAKER
RADIO CHOKE OUTPUT
RADIO CHOKE (8W-47-4)
RIGHT FRONT PANEL SPEAKER
X153 20 WT/BR
X155 20 BR/WT
X154 20 WT/VT
X156 20 VT/WT
BS03 (8W-47-4)
P18 B23
B01 D02
B03 D01P
B120 D02
LEFT DOOR SPEAKER
RIGHT DOOR SPEAKER
X13 16 RD/DG
X15 16 BK/DG
X54 20 VT
X56 20 DB/RD
X55 20 BR/RD
X53 20 DG
BS08 (8W-15-5)
B23 P34
G202 (8W-15-5)
C1
C2
RADIO
LEFT DOOR SPEAKER (-)
LEFT DOOR SPEAKER (+)
RIGHT DOOR SPEAKER (+)
RIGHT DOOR SPEAKER (-)

PREMIUM RHD

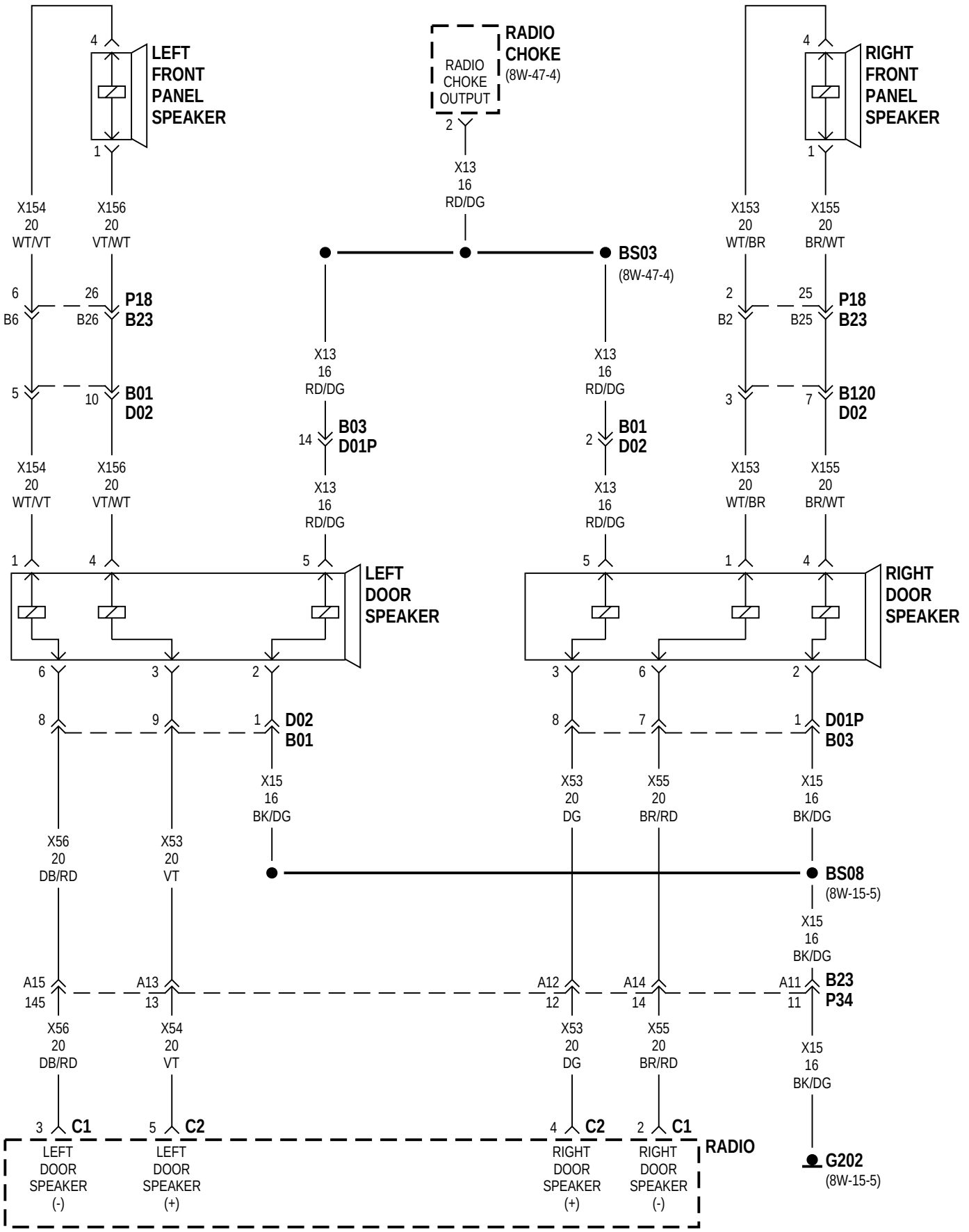

GS004707

J988W-3

8W-48 WINDOW DEFOGGERS

Component	Page
A/C Heater Control	8W-48-2, 3
Driver Power Mirror	8W-48-2
Electric Wiper De-Icer	8W-48-3
Fuse 6 (JB)	8W-48-2
Fuse 7 (JB)	8W-48-2
Fuse 9 (JB)	8W-48-3
Fuse 12 (JB)	8W-48-2
Fuse 27 (PDC)	8W-48-2
G200	8W-48-2
G400	8W-48-2
HVAC Control	8W-48-2, 3
Junction Block	8W-48-2, 3
Message Center	8W-48-2
Passenger Power Mirror	8W-48-2
Power Distribution Center	8W-48-2
Rear Window Defogger	8W-48-2
Rear Window Defogger Relay	8W-48-2
Rear Window Defogger Switch	8W-48-2

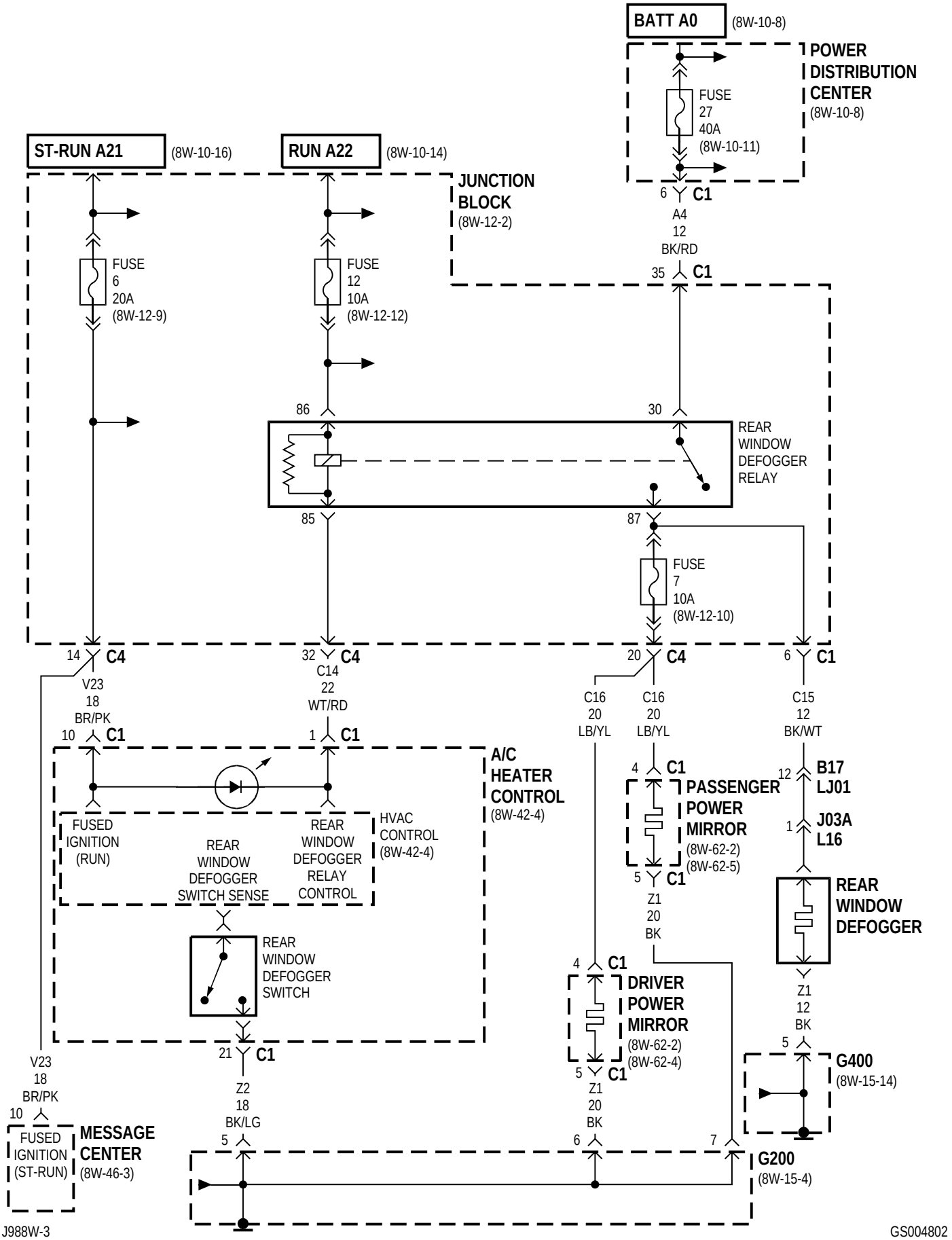

J988W-3

GS004802

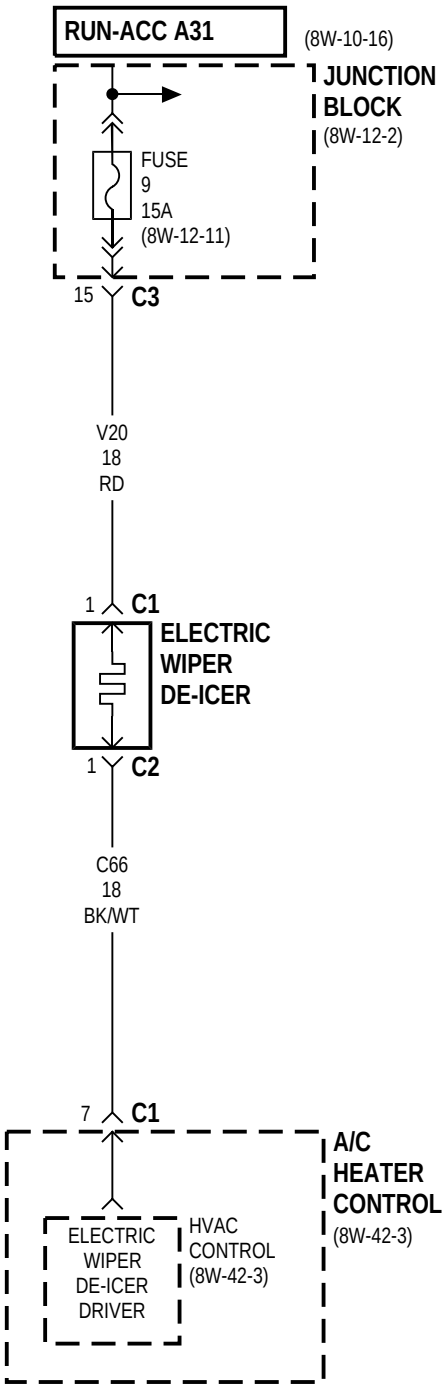
RUN-ACC A31
(8W-10-16)
JUNCTION BLOCK
(8W-12-2)
FUSE
9
15A
(8W-12-11)
15
C3
V20
18
RD
1
C1
ELECTRIC WIPER DE-ICER
1
C2
C66
18
BK/WT
7
C1
A/C HEATER CONTROL
(8W-42-3)
ELECTRIC WIPER DE-ICER DRIVER
HVAC CONTROL
(8W-42-3)

8W-49 OVERHEAD CONSOLE

Component	Page
Ambient Air Temperature Sensor	8W-49-2
Body Control Module	8W-49-3
BS05	8W-49-2
BS06	8W-49-2
Compass/Mini-Trip Computer	8W-49-2
CS02	8W-49-3
CS04	8W-49-2
CS06	8W-49-2, 3
Fuse 6 (JB)	8W-49-2
Fuse 18 (PDC)	8W-49-3
G301	8W-49-2, 3
Junction Block	8W-49-2, 3
Overhead Console	8W-49-2, 3
Power Distribution Center	8W-49-3
Universal Garage Door Opener	8W-49-3

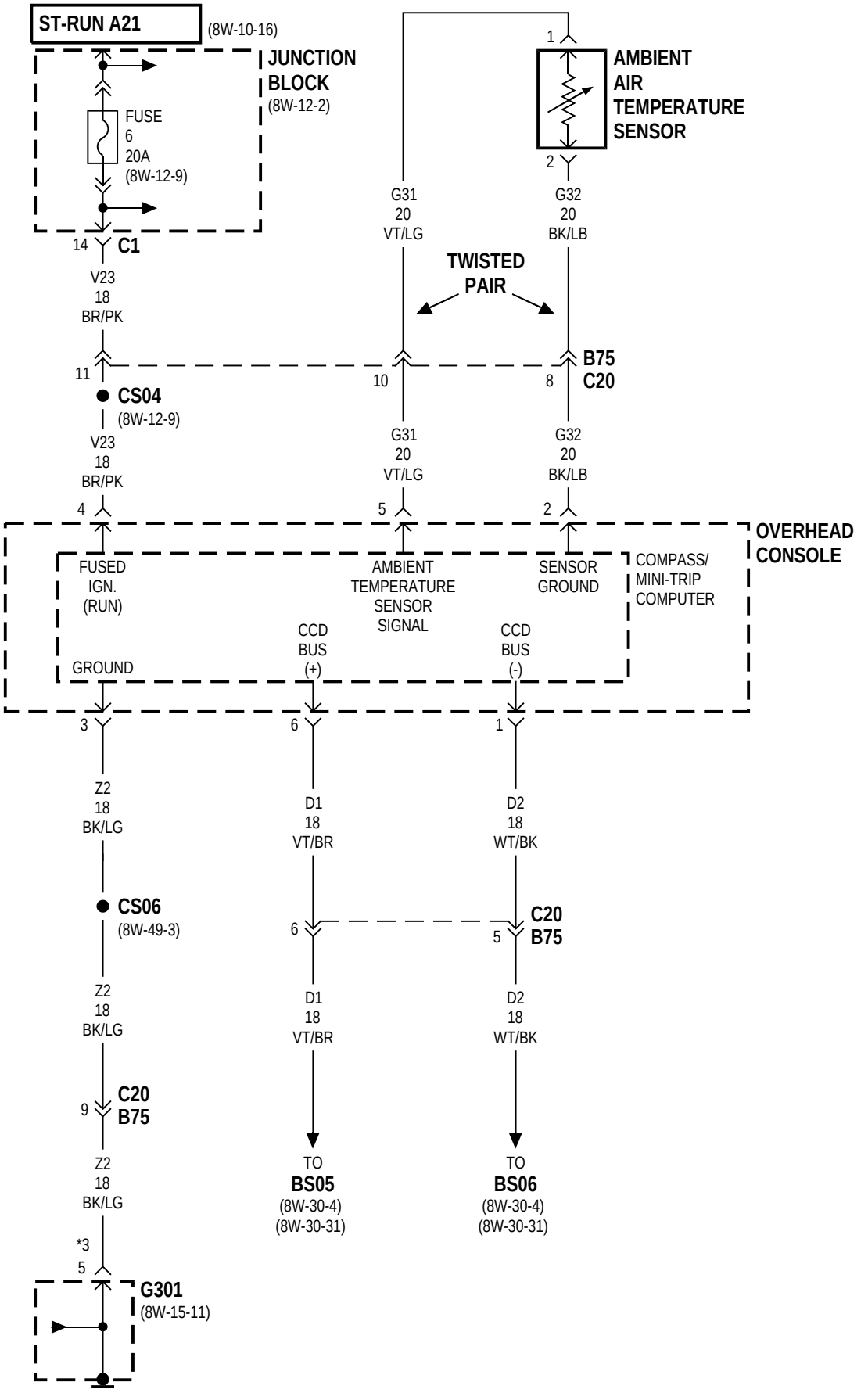
ST-RUN A21
(8W-10-16)
JUNCTION BLOCK
(8W-12-2)
FUSE
6
20A
(8W-12-9)
14
C1
V23
18
BR/PK
11
CS04
(8W-12-9)
V23
18
BR/PK
4
1
AMBIENT AIR TEMPERATURE SENSOR
2
G31
20
VT/LG
G32
20
BK/LB
TWISTED PAIR
10
8
B75
C20
G31
20
VT/LG
G32
20
BK/LB
5
2
OVERHEAD CONSOLE
FUSED IGN. (RUN)
AMBIENT TEMPERATURE SENSOR SIGNAL
SENSOR GROUND
COMPASS/ MINI-TRIP COMPUTER
GROUND
CCD BUS (+)
CCD BUS (-)
3
6
1
Z2
18
BK/LG
D1
18
VT/BR
D2
18
WT/BK
CS06
(8W-49-3)
6
5
C20
B75
Z2
18
BK/LG
D1
18
VT/BR
D2
18
WT/BK
9
C20
B75
Z2
18
BK/LG
TO BS05
(8W-30-4)
(8W-30-31)
TO BS06
(8W-30-4)
(8W-30-31)
*3
5
G301
(8W-15-11)

*DIESEL

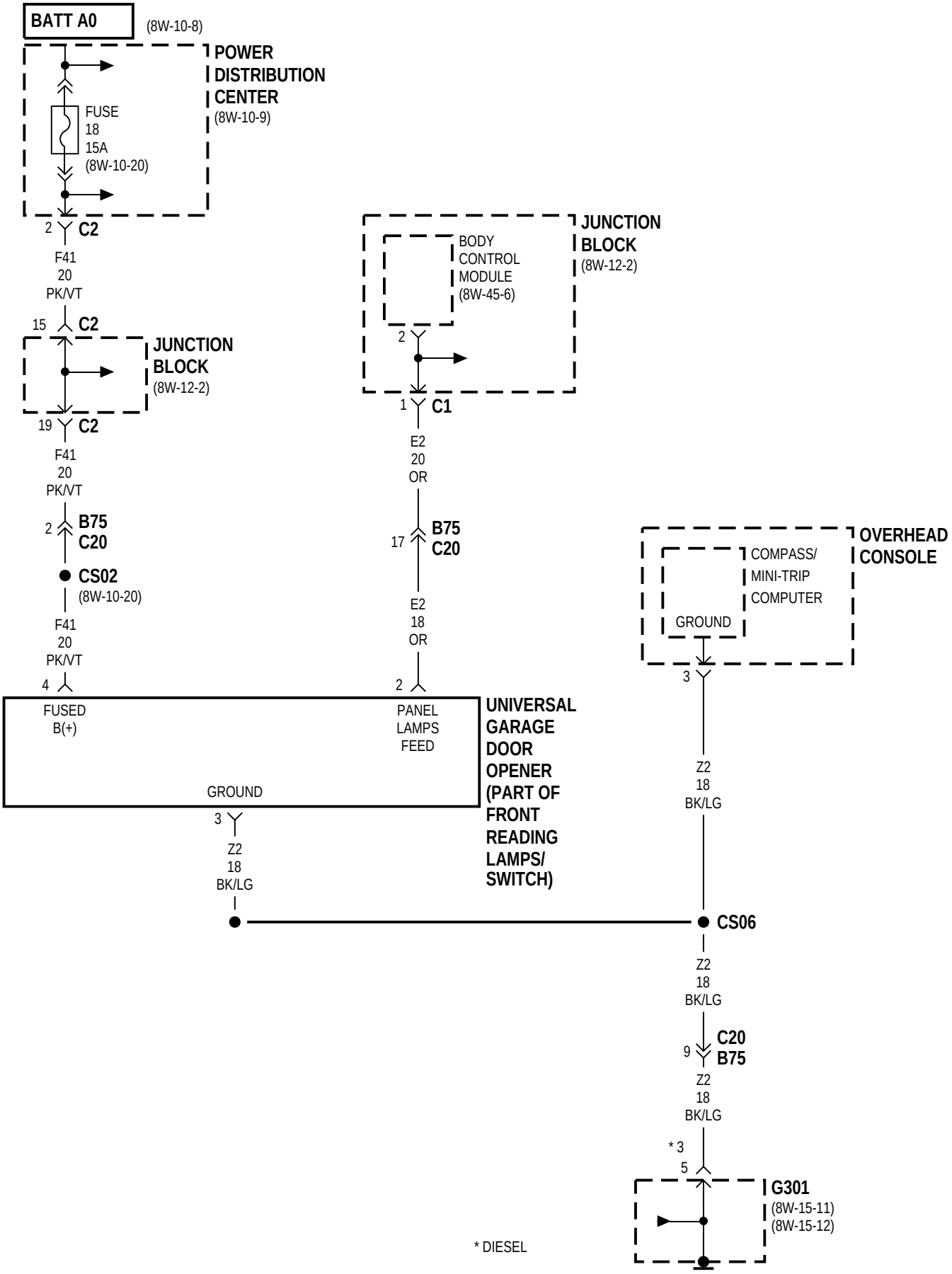
BATT A0
(8W-10-8)
POWER DISTRIBUTION CENTER
(8W-10-9)
FUSE 18 15A
(8W-10-20)
2 C2
F41 20 PK/VT
15 C2
JUNCTION BLOCK
(8W-12-2)
19 C2
F41 20 PK/VT
2 B75 C20
CS02
(8W-10-20)
F41 20 PK/VT
4
FUSED B(+)
JUNCTION BLOCK
(8W-12-2)
BODY CONTROL MODULE
(8W-45-6)
2
1 C1
E2 20 OR
17 B75 C20
E2 18 OR
2
PANEL LAMPS FEED
OVERHEAD CONSOLE
COMPASS/ MINI-TRIP COMPUTER
GROUND
3
Z2 18 BK/LG
UNIVERSAL GARAGE DOOR OPENER (PART OF FRONT READING LAMPS/ SWITCH)
GROUND
3
Z2 18 BK/LG
CS06
Z2 18 BK/LG
9 C20 B75
Z2 18 BK/LG
* 3
5
G301
(8W-15-11)
(8W-15-12)
* DIESEL

8W-50 FRONT LIGHTING

Component	Page
Body Control Module	8W-50-2, 9, 10, 11, 12, 13
BS15	8W-50-3, 6
BS16	8W-50-8
Combination Flasher/DRL Module	8W-50-2, 11, 12, 13
Courtesy Lamp Relay	8W-50-9, 10
Dome Lamp Switch	8W-50-9, 10
Fog Lamp Indicator	8W-50-9, 10
Fog Lamp Relay	8W-50-3, 5
Front Reading Lamps/Switch	8W-50-9, 10
Fuse 1 (JB)	8W-50-11, 12
Fuse 3 (JB)	8W-50-11, 12
Fuse 4 (JB)	8W-50-7
Fuse 4 (PDC)	8W-50-2, 3, 5, 6
Fuse 5 (JB)	8W-50-11, 12
Fuse 5 (PDC)	8W-50-2, 3, 4, 6
Fuse 6 (PDC)	8W-50-2, 3, 5, 6
Fuse 7 (PDC)	8W-50-2, 3, 4, 6
Fuse 10 (PDC)	8W-50-11, 12
Fuse 12 (JB)	8W-50-13
Fuse 22 (PDC)	8W-50-7, 11, 12
G200	8W-50-2, 8, 13
G300	8W-50-5, 6, 8, 9, 10, 11, 12, 13
G301	8W-50-4, 6, 8, 11, 12
Headlamp Dimmer Switch	8W-50-2, 5, 13
Headlamp Switch	8W-50-7, 8, 9, 10
High Beam Relay	8W-50-2, 3, 4, 5, 6
Ignition Switch	8W-50-13
Illumination Lamp	8W-50-9, 10
Junction Block	8W-50-2, 5, 7, 9, 10, 11, 12, 13
Left Fog Lamp	8W-50-5, 6, 7
Left Front Park/Turn Signal Lamp	8W-50-11, 12
Left Headlamp	8W-50-3, 6
Left Headlamp Leveling Motor	8W-50-8
Left High Headlamp	8W-50-3, 5
Left Low Headlamp	8W-50-5
Low Beam Relay	8W-50-2, 3, 4, 5, 6
Message Center	8W-50-3, 13
Park Brake Switch	8W-50-13
Park Lamp Relay	8W-50-7, 11, 12
Power Distribution Center	8W-50-2, 3, 4, 5, 6, 7, 11, 12
Radio	8W-50-10
Rear Fog Lamp Indicator	8W-50-10
Right Fog Lamp	8W-50-5, 6, 7
Right Front Park/Turn Signal Lamp	8W-50-11, 12
Right Headlamp	8W-50-3, 6, 8
Right Headlamp Leveling Motor	8W-50-8
Right High Headlamp	8W-50-3, 4
Right Low Headlamp	8W-50-3, 4
Right Rear Lamp Assembly	8W-50-11

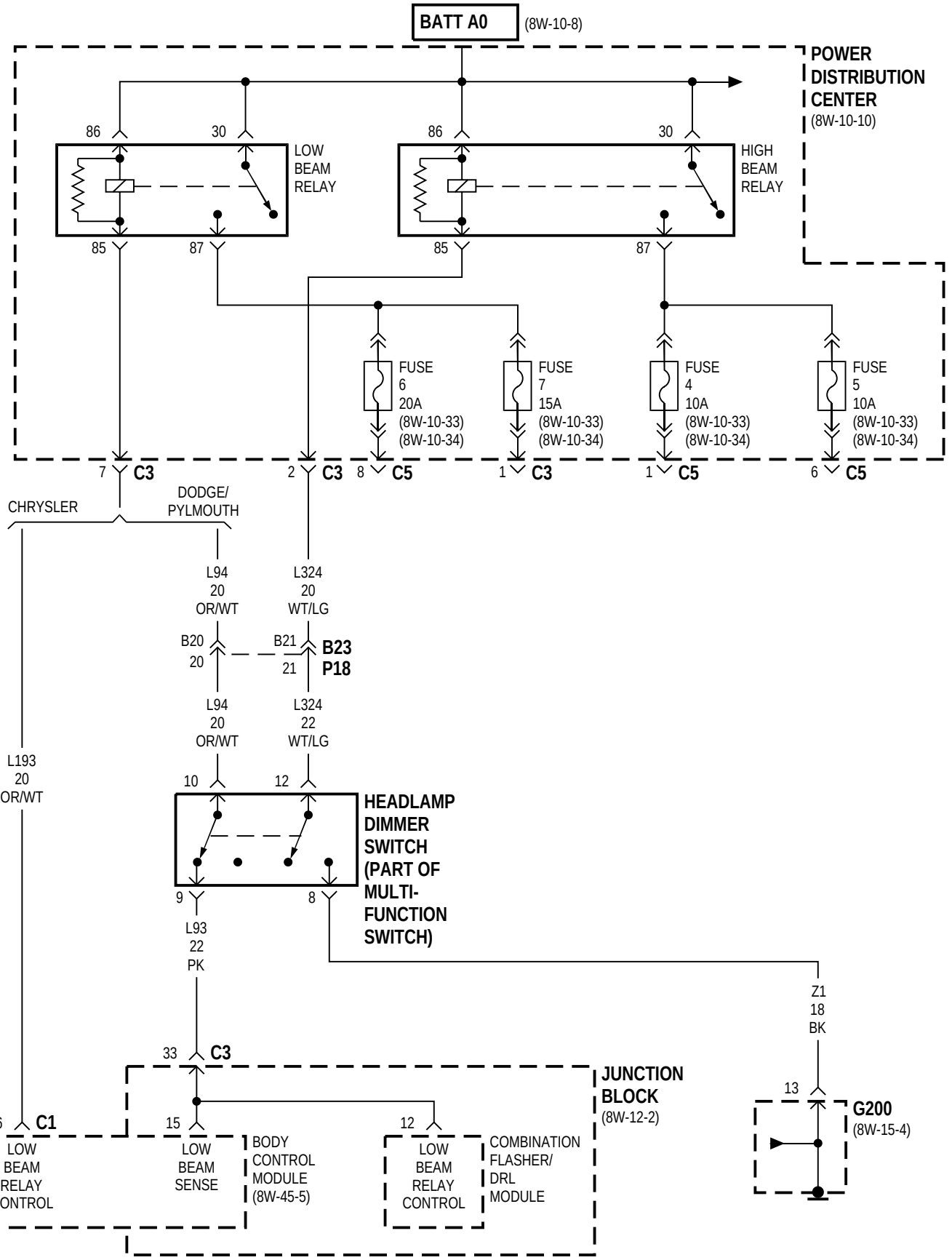
BATT A0
(8W-10-8)
POWER DISTRIBUTION CENTER
(8W-10-10)
86
30
LOW BEAM RELAY
85
87
86
30
HIGH BEAM RELAY
85
87
FUSE 6 20A (8W-10-33) (8W-10-34)
FUSE 7 15A (8W-10-33) (8W-10-34)
FUSE 4 10A (8W-10-33) (8W-10-34)
FUSE 5 10A (8W-10-33) (8W-10-34)
7 C3
2 C3
8 C5
1 C3
1 C5
6 C5
CHRYSLER
DODGE/ PYLMOUTH
L94 20 OR/WT
L324 20 WT/LG
B20 20
B21 21
B23 P18
L94 20 OR/WT
L324 22 WT/LG
L193 20 OR/WT
10
12
HEADLAMP DIMMER SWITCH (PART OF MULTI-FUNCTION SWITCH)
9
8
L93 22 PK
Z1 18 BK
33 C3
JUNCTION BLOCK
(8W-12-2)
13
G200
(8W-15-4)
76 C1
LOW BEAM RELAY CONTROL
15
LOW BEAM SENSE
BODY CONTROL MODULE (8W-45-5)
12
LOW BEAM RELAY CONTROL
COMBINATION FLASHER/ DRL MODULE

EXCEPT BUILT-UP-EXPORT

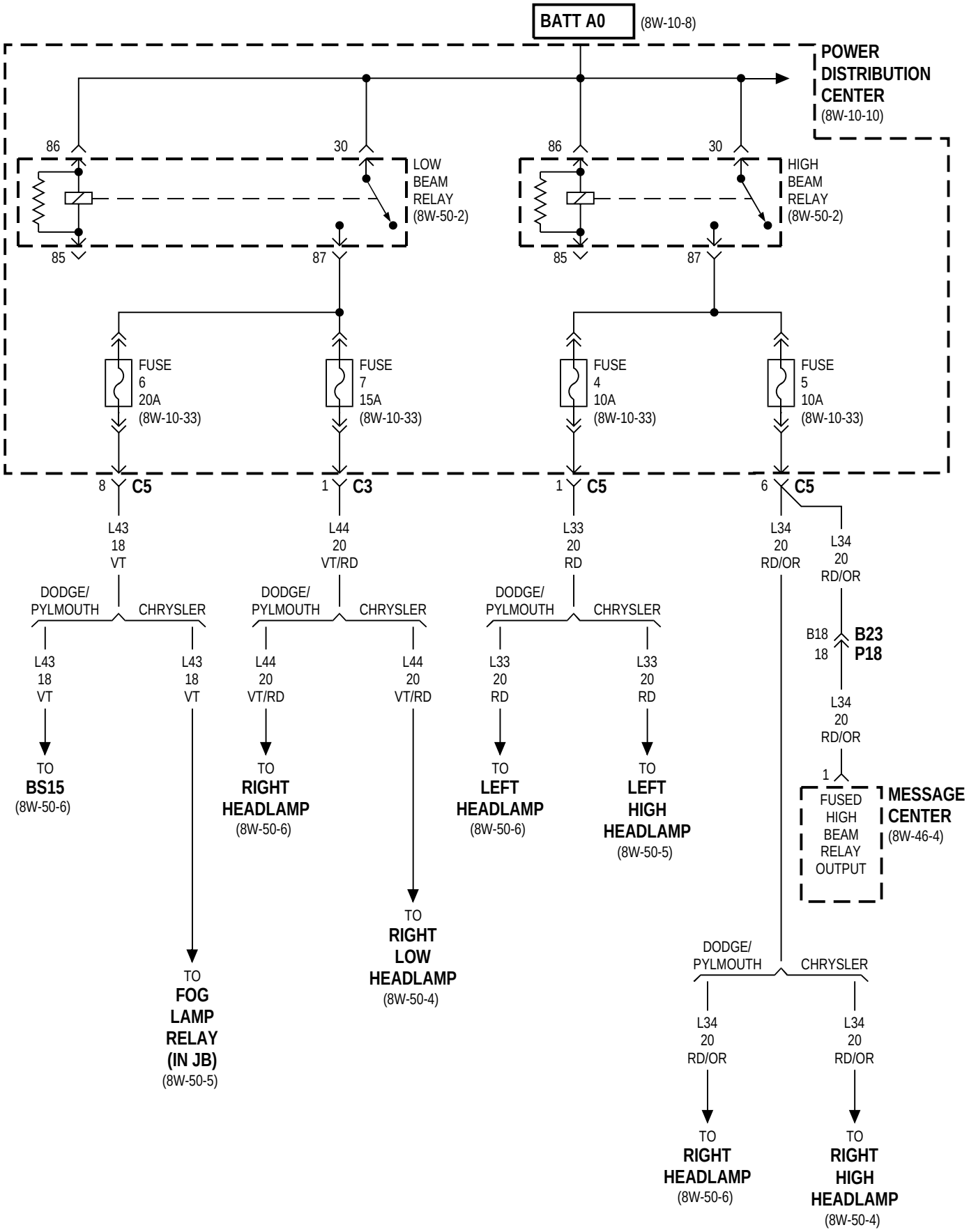

EXCEPT BUILT-UP-EXPORT/CHRYSLER

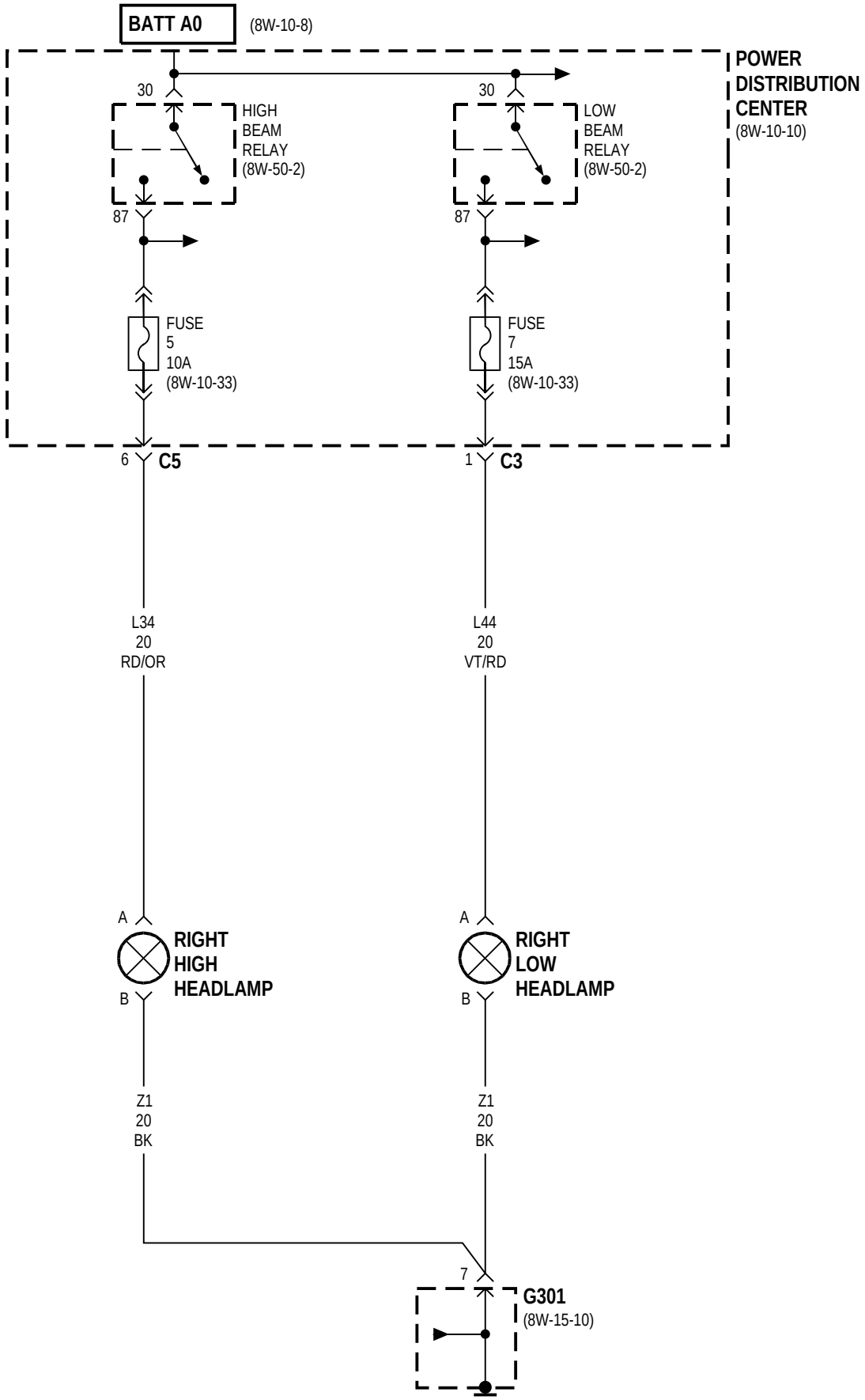

EXCEPT BUILT-UP-EXPORT/CHRYSLER

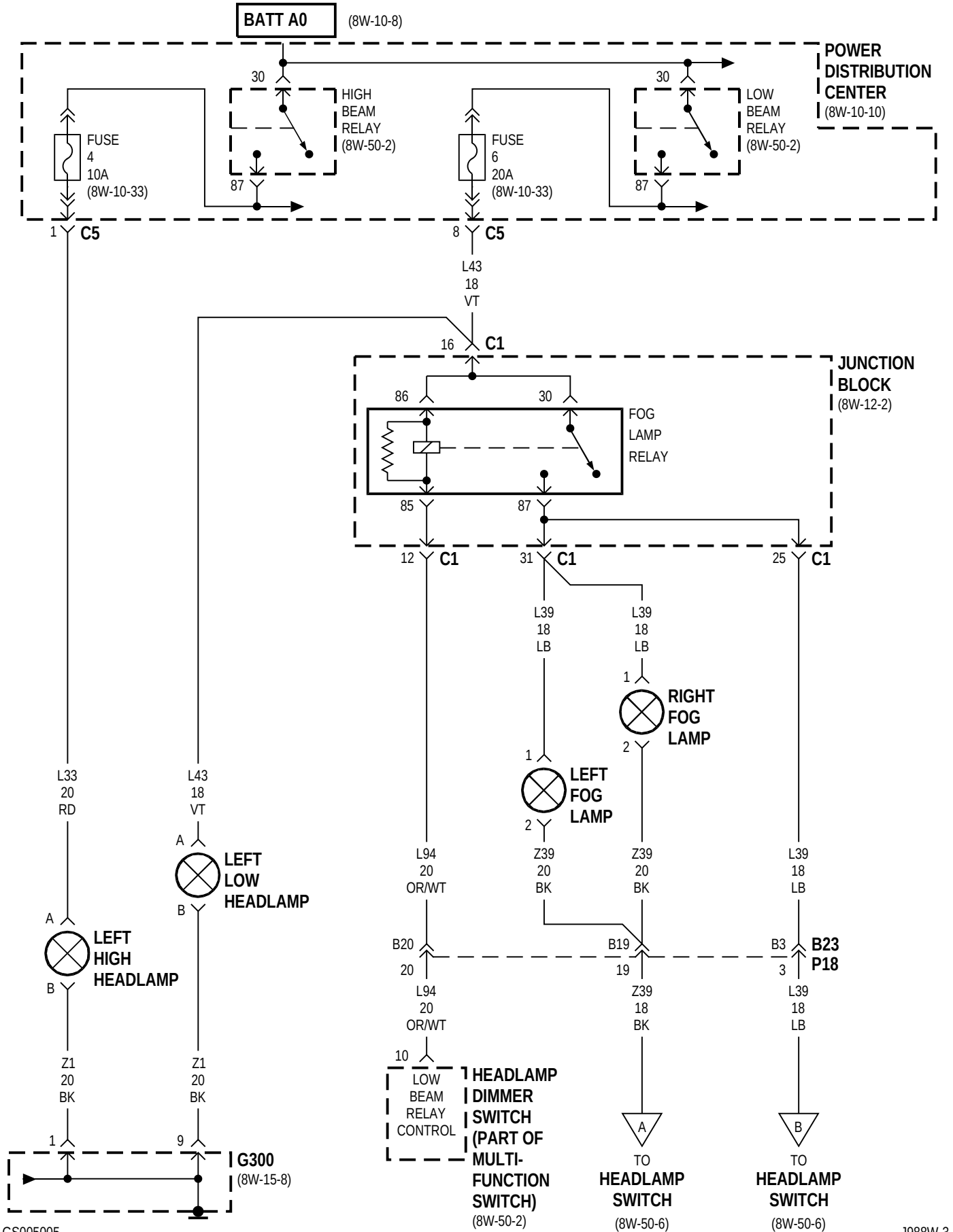

GS005005

J988W-3

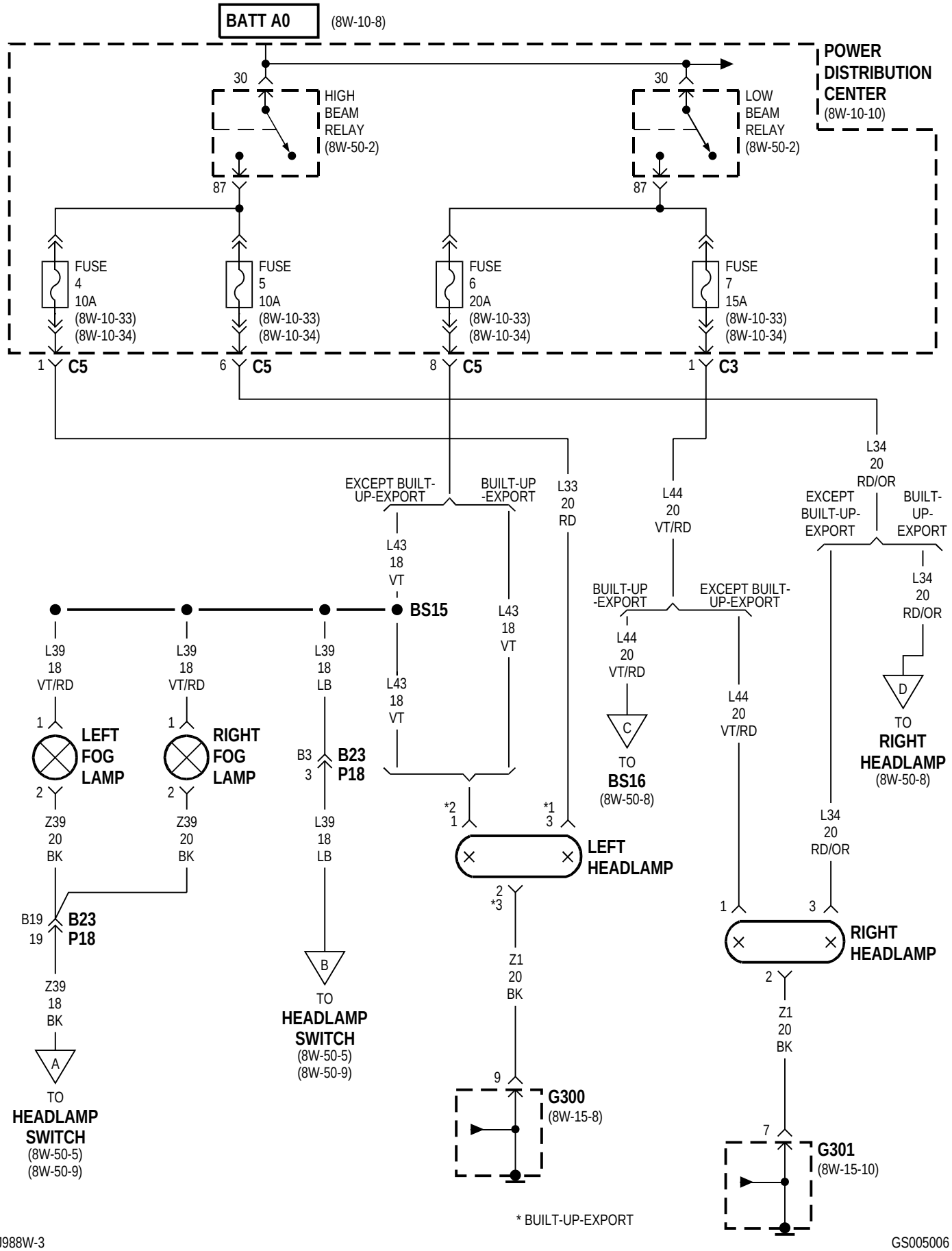
BATT A0
(8W-10-8)
POWER DISTRIBUTION CENTER
(8W-10-10)
30
HIGH BEAM RELAY
(8W-50-2)
87
30
LOW BEAM RELAY
(8W-50-2)
87
FUSE 4 10A (8W-10-33) (8W-10-34)
FUSE 5 10A (8W-10-33) (8W-10-34)
FUSE 6 20A (8W-10-33) (8W-10-34)
FUSE 7 15A (8W-10-33) (8W-10-34)
1 C5
6 C5
8 C5
1 C3
EXCEPT BUILT-UP-EXPORT
BUILT-UP -EXPORT
L33 20 RD
L43 18 VT
L44 20 VT/RD
L34 20 RD/OR
EXCEPT BUILT-UP-EXPORT
BUILT-UP-EXPORT
BS15
L39 18 VT/RD
L39 18 VT/RD
L39 18 LB
L43 18 VT
BUILT-UP -EXPORT
EXCEPT BUILT-UP-EXPORT
L44 20 VT/RD
L34 20 RD/OR
1 LEFT FOG LAMP 2
1 RIGHT FOG LAMP 2
B3 3 B23 P18
C
TO BS16 (8W-50-8)
D
TO RIGHT HEADLAMP (8W-50-8)
Z39 20 BK
Z39 20 BK
L39 18 LB
*2 1
*1 3
L44 20 VT/RD
L34 20 RD/OR
LEFT HEADLAMP
2 *3
1
3
RIGHT HEADLAMP
B19 19 B23 P18
Z39 18 BK
B
TO HEADLAMP SWITCH (8W-50-5) (8W-50-9)
Z1 20 BK
Z1 20 BK
2
A
TO HEADLAMP SWITCH (8W-50-5) (8W-50-9)
9
G300
(8W-15-8)
7
G301
(8W-15-10)
* BUILT-UP-EXPORT

BUILT-UP-EXPORT

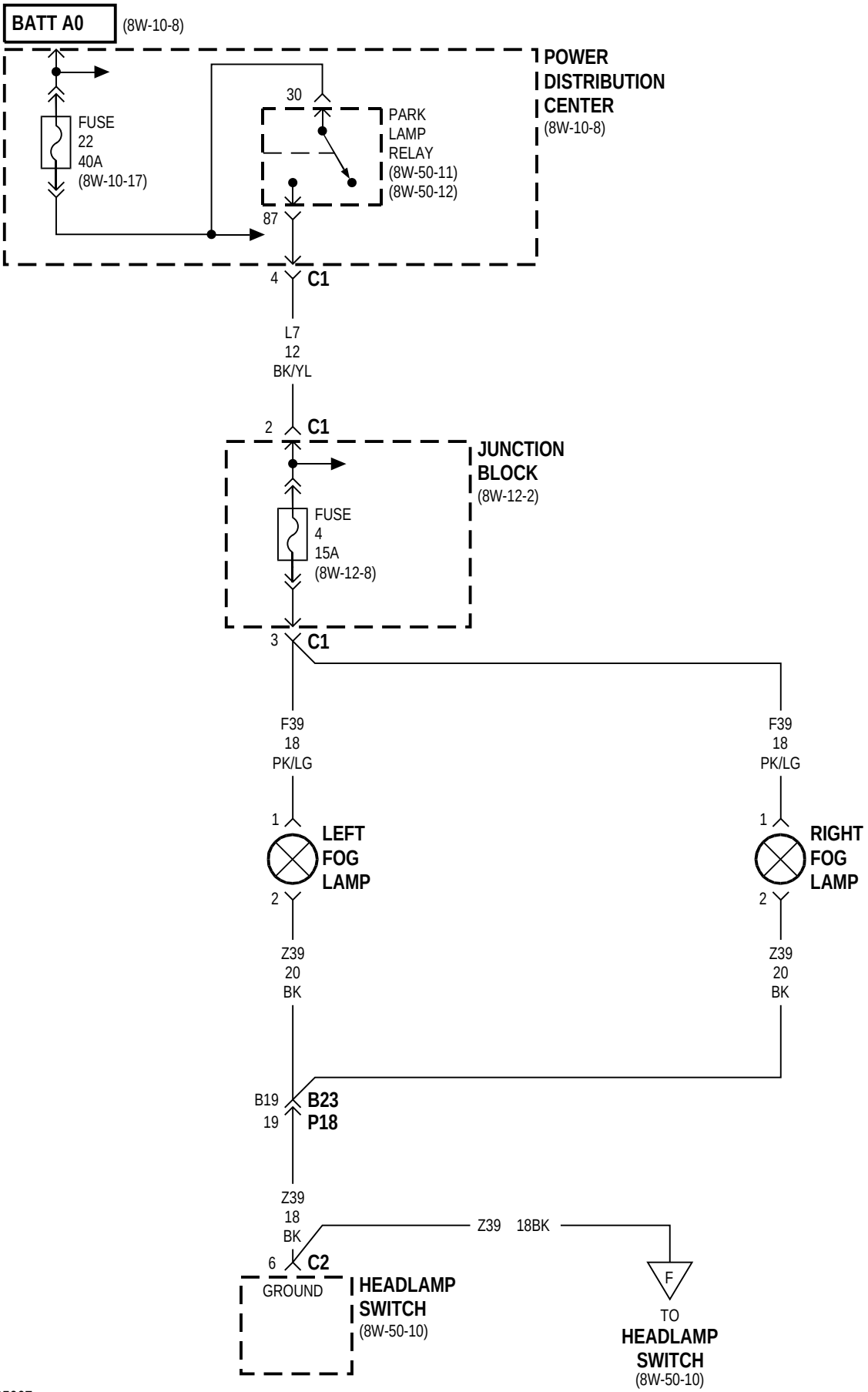

BUILT-UP-EXPORT

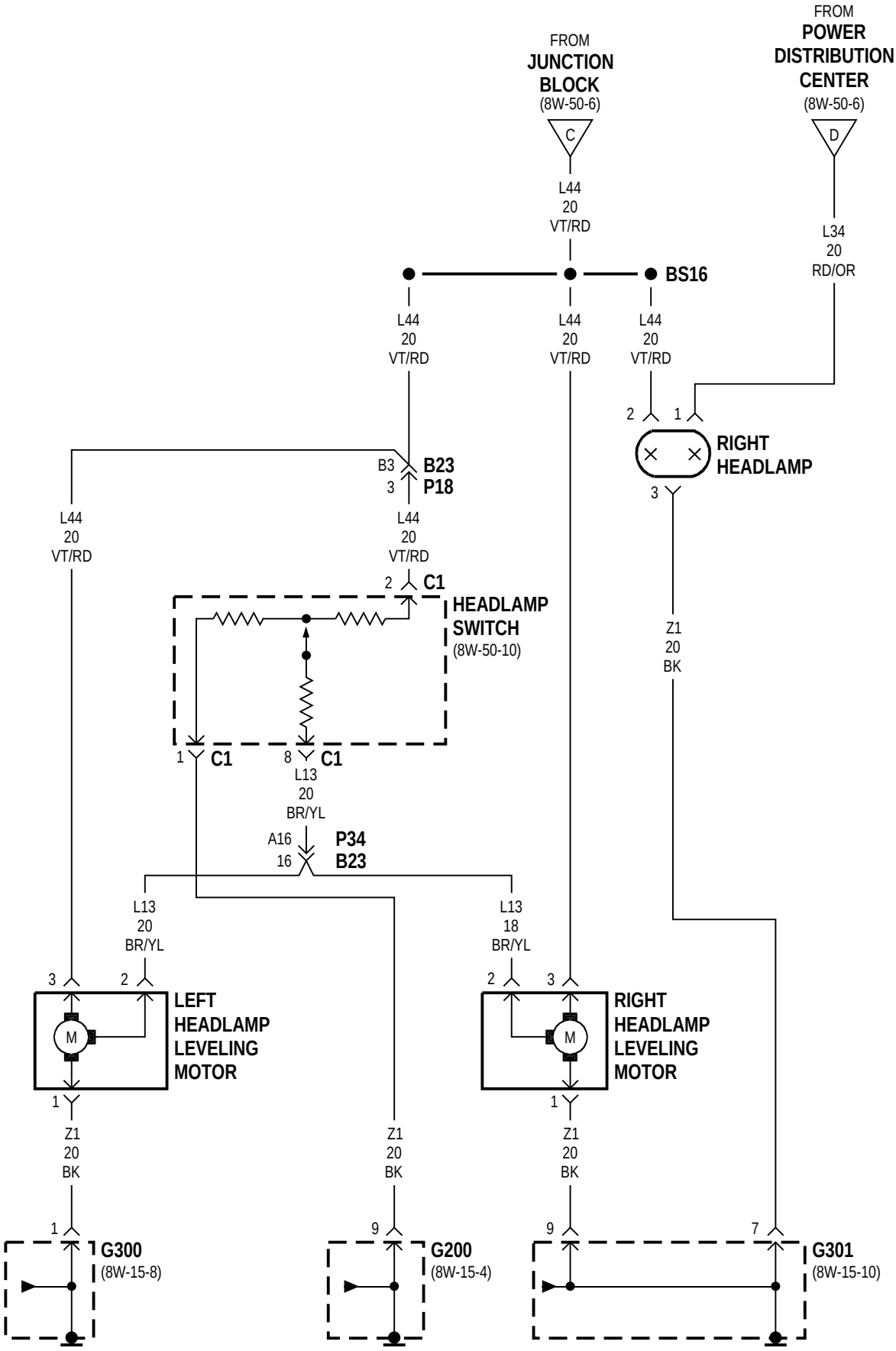

EXCEPT BUILT-UP-EXPORT

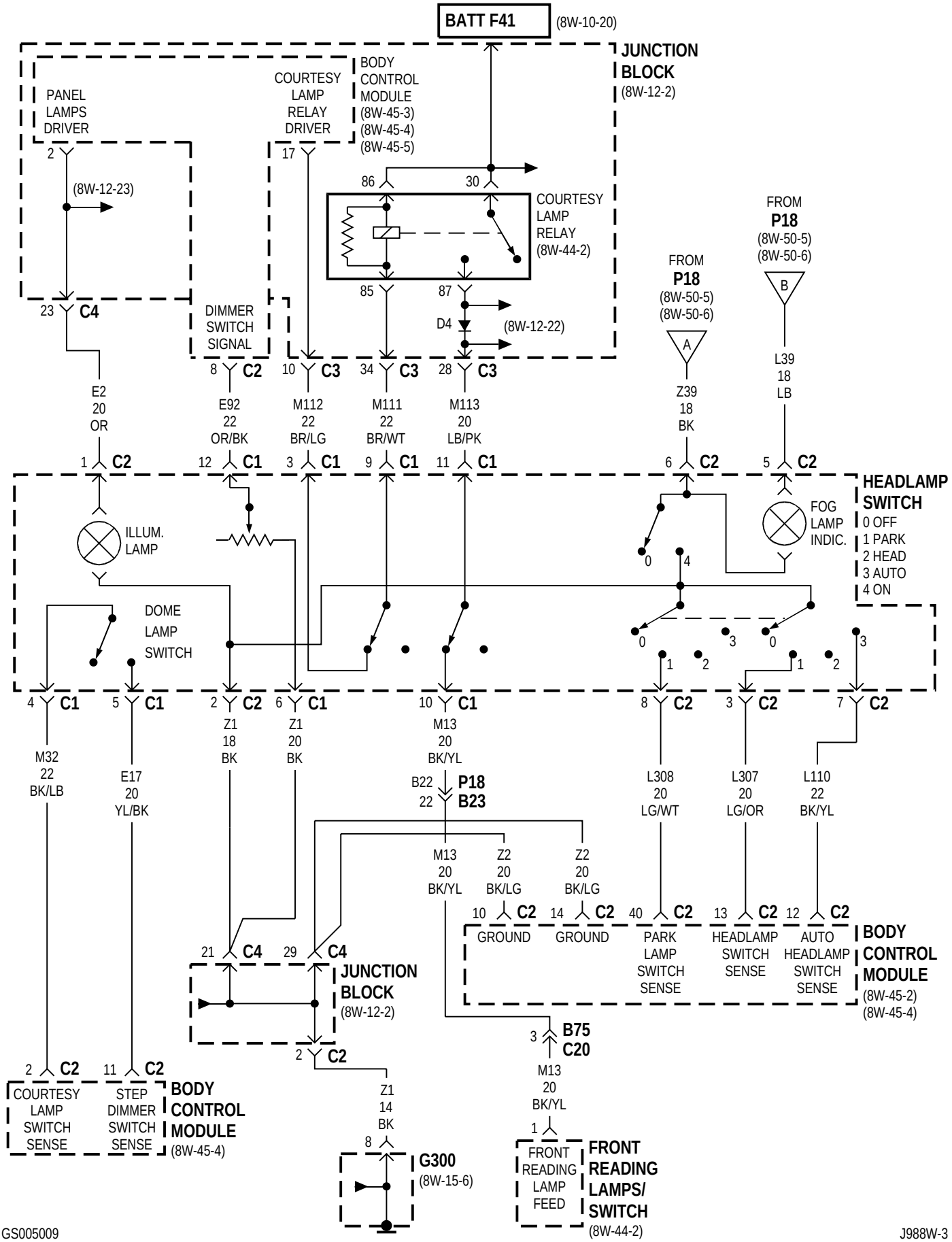

GS005009

J988W-3

BUILT-UP-EXPORT

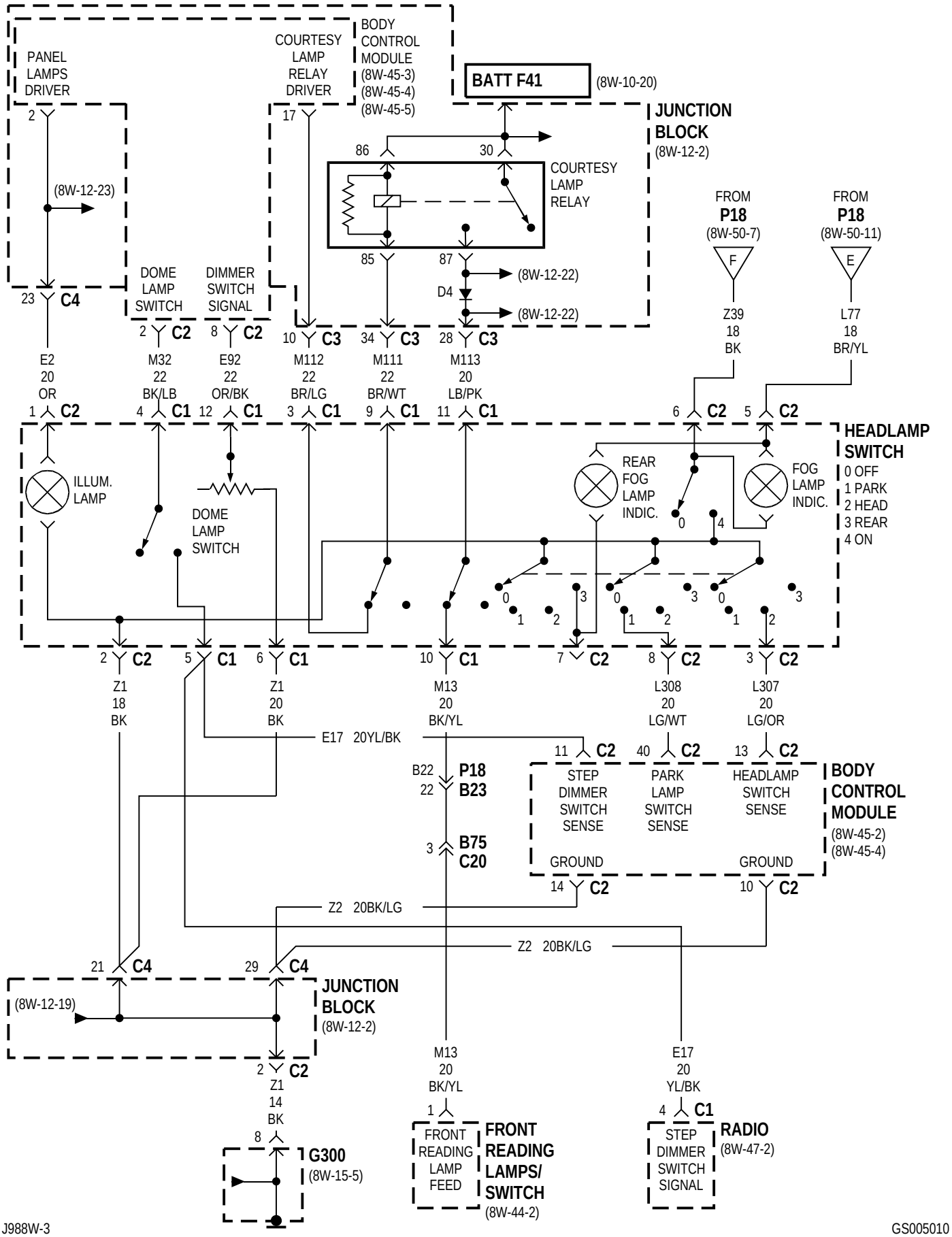

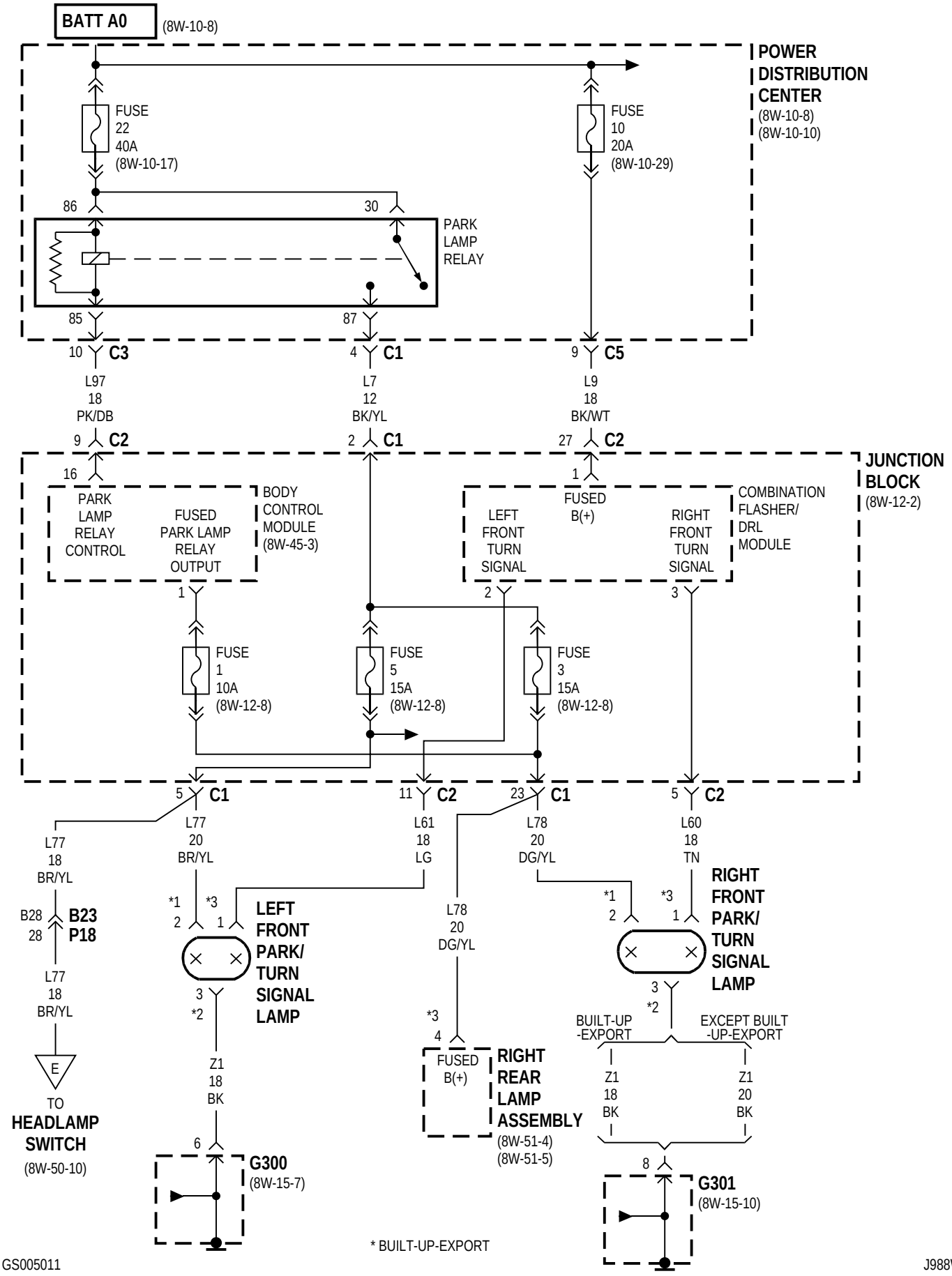
BATT A0
(8W-10-8)
POWER DISTRIBUTION CENTER
(8W-10-8)
(8W-10-10)
FUSE 22 40A (8W-10-17)
FUSE 10 20A (8W-10-29)
86
30
PARK LAMP RELAY
85
87
10 C3
4 C1
9 C5
L97 18 PK/DB
L7 12 BK/YL
L9 18 BK/WT
9 C2
2 C1
27 C2
JUNCTION BLOCK
(8W-12-2)
16
1
PARK LAMP RELAY CONTROL
FUSED PARK LAMP RELAY OUTPUT
BODY CONTROL MODULE
(8W-45-3)
FUSED B(+)
LEFT FRONT TURN SIGNAL
RIGHT FRONT TURN SIGNAL
COMBINATION FLASHER/ DRL MODULE
1
2
3
FUSE 1 10A (8W-12-8)
FUSE 5 15A (8W-12-8)
FUSE 3 15A (8W-12-8)
5 C1
11 C2
23 C1
5 C2
L77 18 BR/YL
L77 20 BR/YL
L61 18 LG
L78 20 DG/YL
L60 18 TN
B28
28
B23
P18
*1
*3
2
1
LEFT FRONT PARK/ TURN SIGNAL LAMP
3
*2
L78 20 DG/YL
*3
4
FUSED B(+)
RIGHT REAR LAMP ASSEMBLY
(8W-51-4)
(8W-51-5)
RIGHT FRONT PARK/ TURN SIGNAL LAMP
BUILT-UP -EXPORT
EXCEPT BUILT -UP-EXPORT
Z1 18 BK
Z1 20 BK
E
TO HEADLAMP SWITCH
(8W-50-10)
Z1 18 BK
6
G300
(8W-15-7)
8
G301
(8W-15-10)
* BUILT-UP-EXPORT

DRL

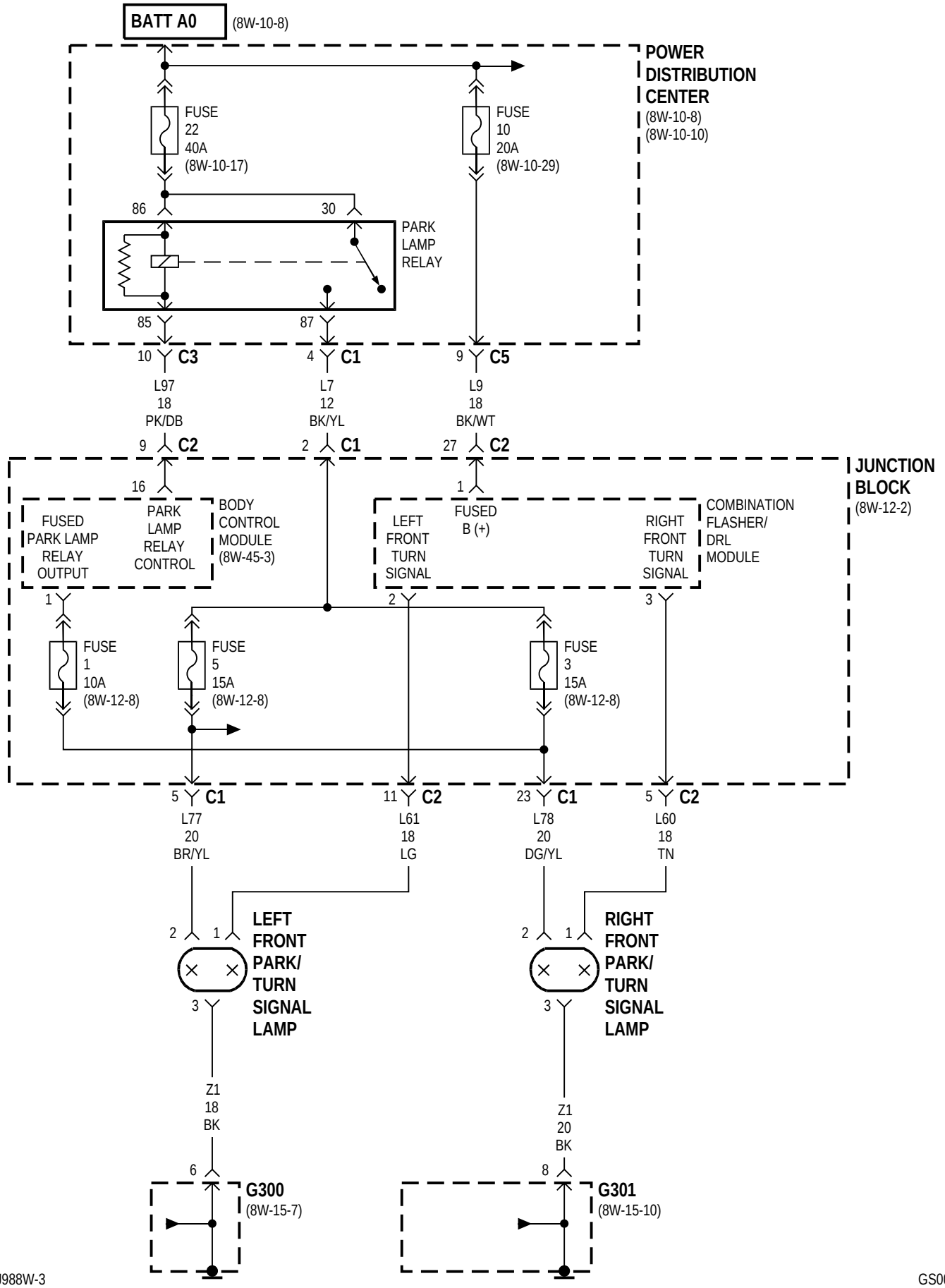
BATT A0
(8W-10-8)
POWER DISTRIBUTION CENTER
(8W-10-8)
(8W-10-10)
FUSE 22 40A (8W-10-17)
FUSE 10 20A (8W-10-29)
86
30
PARK LAMP RELAY
85
87
10 C3
4 C1
9 C5
L97 18 PK/DB
L7 12 BK/YL
L9 18 BK/WT
9 C2
2 C1
27 C2
JUNCTION BLOCK
(8W-12-2)
16
1
FUSED PARK LAMP RELAY OUTPUT
PARK LAMP RELAY CONTROL
BODY CONTROL MODULE
(8W-45-3)
LEFT FRONT TURN SIGNAL
FUSED B (+)
RIGHT FRONT TURN SIGNAL
COMBINATION FLASHER/ DRL MODULE
1
2
3
FUSE 1 10A (8W-12-8)
FUSE 5 15A (8W-12-8)
FUSE 3 15A (8W-12-8)
5 C1
11 C2
23 C1
5 C2
L77 20 BR/YL
L61 18 LG
L78 20 DG/YL
L60 18 TN
2
1
LEFT FRONT PARK/ TURN SIGNAL LAMP
RIGHT FRONT PARK/ TURN SIGNAL LAMP
3
Z1 18 BK
Z1 20 BK
6
8
G300
(8W-15-7)
G301
(8W-15-10)

DRL

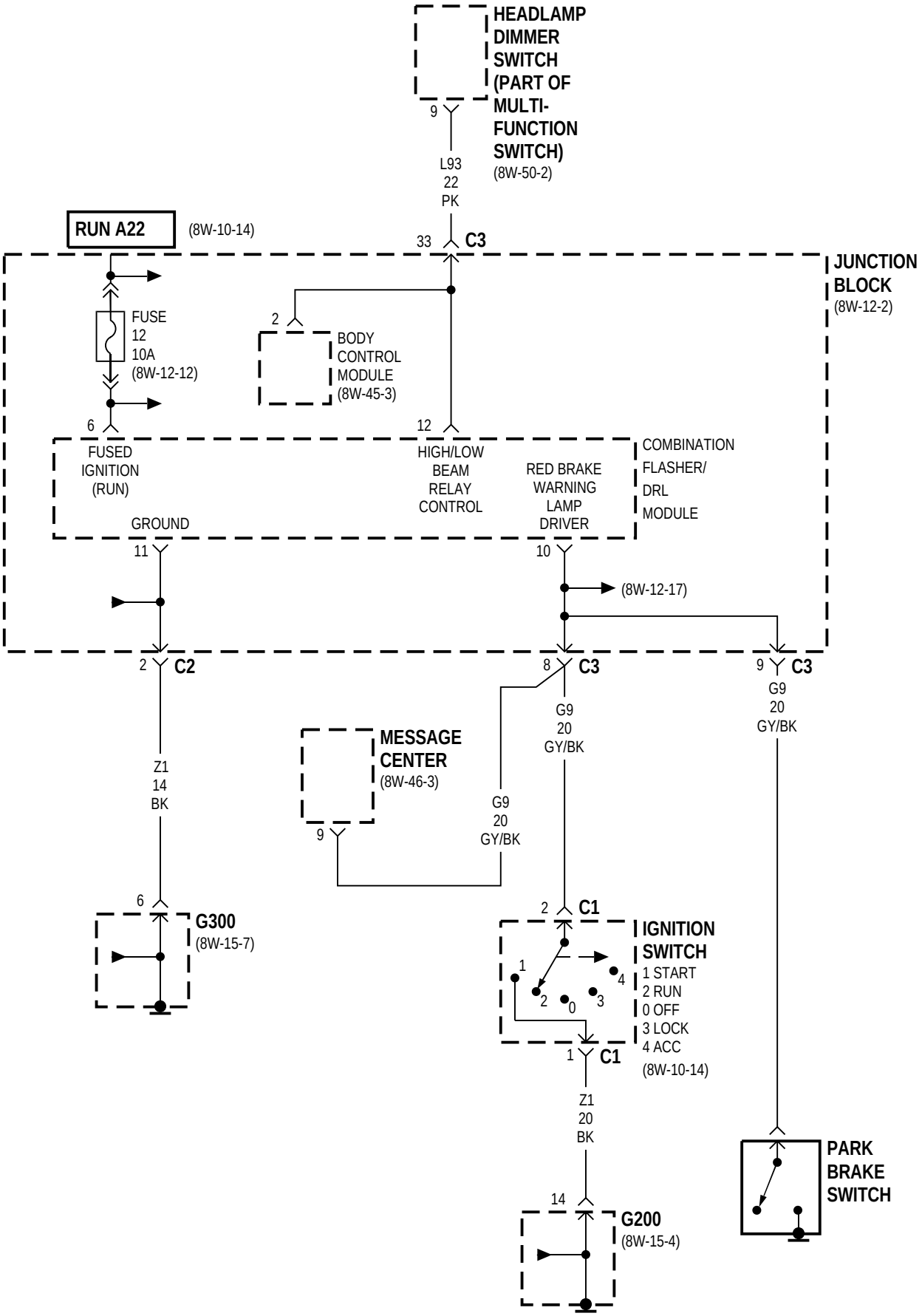
HEADLAMP DIMMER SWITCH (PART OF MULTI-FUNCTION SWITCH)
(8W-50-2)
9
L93
22
PK
RUN A22
(8W-10-14)
33
C3
JUNCTION BLOCK
(8W-12-2)
FUSE
12
10A
(8W-12-12)
2
BODY CONTROL MODULE
(8W-45-3)
6
12
FUSED IGNITION (RUN)
HIGH/LOW BEAM RELAY CONTROL
RED BRAKE WARNING LAMP DRIVER
COMBINATION FLASHER/ DRL MODULE
GROUND
11
10
(8W-12-17)
2
C2
8
C3
9
C3
G9
20
GY/BK
MESSAGE CENTER
(8W-46-3)
Z1
14
BK
9
G9
20
GY/BK
6
G300
(8W-15-7)
2
C1
IGNITION SWITCH
1 START
2 RUN
0 OFF
3 LOCK
4 ACC
1
C1
(8W-10-14)
Z1
20
BK
PARK BRAKE SWITCH
14
G200
(8W-15-4)

8W-51 REAR LIGHTING

Component	Page
Back-Up Lamp	8W-51-4, 5
Back-Up Switch	8W-51-5
Body Control Module	8W-51-2, 6
BS01	8W-51-4, 5, 7
BS02	8W-51-4, 5
Center High Mounted Stop Lamp	8W-51-7
Combination Flasher/DRL Module	8W-51-3
Fuse 1 (JB)	8W-51-2
Fuse 3 (JB)	8W-51-2, 6
Fuse 5 (JB)	8W-51-2, 6
Fuse 10 (PDC)	8W-51-3
Fuse 12 (JB)	8W-51-3, 4, 5
Fuse 13 (PDC)	8W-51-4, 5, 7
Fuse 22 (PDC)	8W-51-2, 6
G300	8W-51-2, 3
G301	8W-51-3
G302	8W-51-4, 5
G400	8W-51-2, 7
Headlamp Switch	8W-51-2, 6
Junction Block	8W-51-2, 3, 4, 5, 6
Left Rear Lamp Assembly	8W-51-4, 5, 6
Left Repeater Lamp	8W-51-3
License Lamp	8W-51-2
Park Lamp Relay	8W-51-2, 6
Power Distribution Center	8W-51-2, 3, 4, 5, 6, 7
Rear Fog Lamp	8W-51-6
Rear Fog Lamp Indicator	8W-51-6
Right Front Park/Turn Signal Lamp	8W-51-2
Right Rear Lamp Assembly	8W-51-4, 5, 6
Right Repeater Lamp	8W-51-3
Stop Lamp Switch	8W-51-4, 5, 7
Tail/Stop Lamp	8W-51-4, 5
Tail/Turn Signal Lamp	8W-51-4, 5
Transmission Range Sensor	8W-51-4

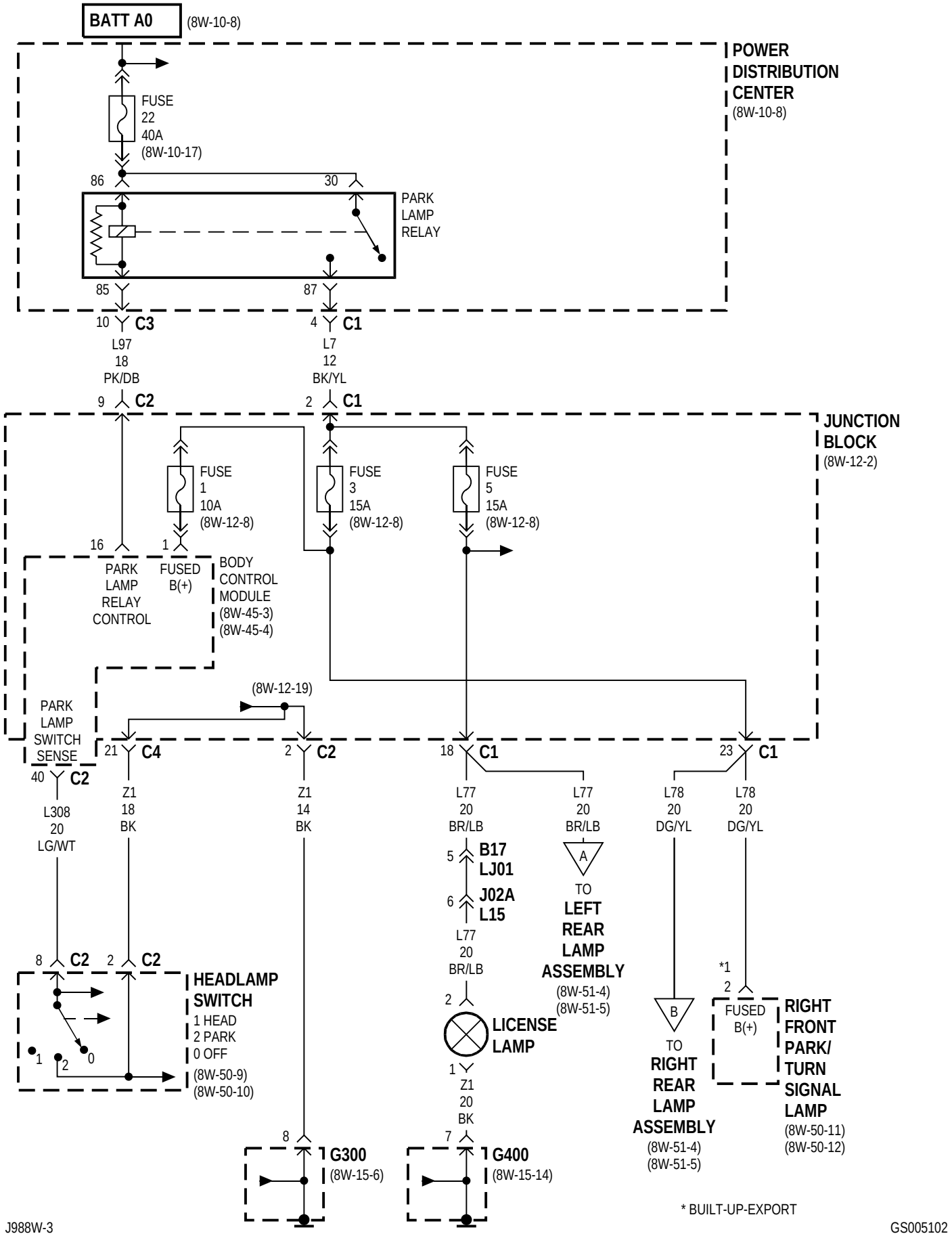
BATT A0
(8W-10-8)
POWER DISTRIBUTION CENTER
(8W-10-8)
FUSE 22 40A (8W-10-17)
86
30
PARK LAMP RELAY
85
87
10 C3
L97 18 PK/DB
4 C1
L7 12 BK/YL
9 C2
2 C1
JUNCTION BLOCK
(8W-12-2)
FUSE 1 10A (8W-12-8)
FUSE 3 15A (8W-12-8)
FUSE 5 15A (8W-12-8)
16
1
PARK LAMP RELAY CONTROL
FUSED B(+)
BODY CONTROL MODULE
(8W-45-3)
(8W-45-4)
(8W-12-19)
PARK LAMP SWITCH SENSE
40 C2
21 C4
2 C2
18 C1
23 C1
L308 20 LG/WT
Z1 18 BK
Z1 14 BK
L77 20 BR/LB
L77 20 BR/LB
L78 20 DG/YL
L78 20 DG/YL
5 B17 LJ01
6 J02A L15
A
TO LEFT REAR LAMP ASSEMBLY
(8W-51-4)
(8W-51-5)
8 C2
2 C2
HEADLAMP SWITCH
1 HEAD
2 PARK
0 OFF
(8W-50-9)
(8W-50-10)
L77 20 BR/LB
2
LICENSE LAMP
1
Z1 20 BK
B
TO RIGHT REAR LAMP ASSEMBLY
(8W-51-4)
(8W-51-5)
*1
2
FUSED B(+)
RIGHT FRONT PARK/ TURN SIGNAL LAMP
(8W-50-11)
(8W-50-12)
8
G300
(8W-15-6)
7
G400
(8W-15-14)
* BUILT-UP-EXPORT

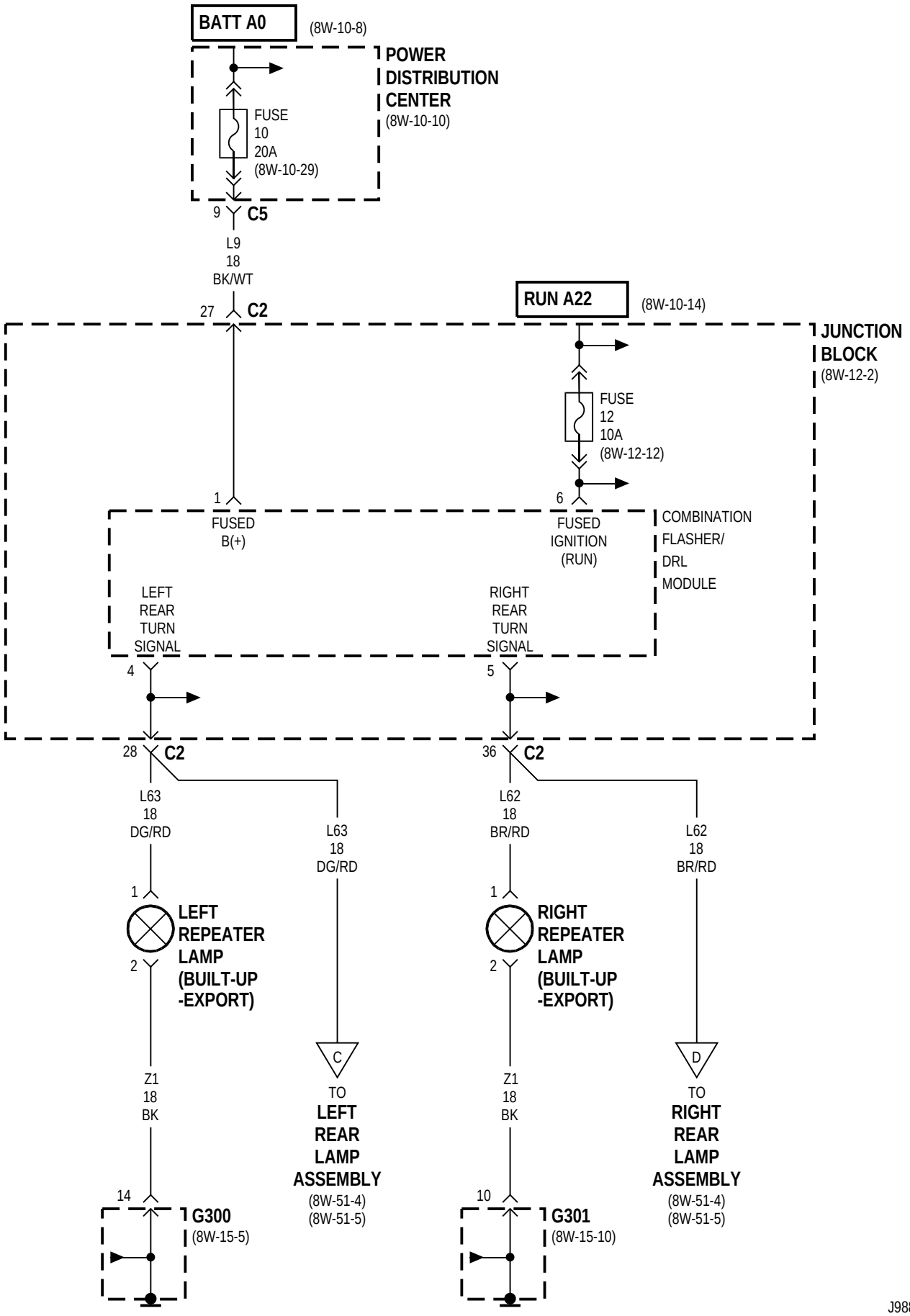
BATT A0
(8W-10-8)
POWER DISTRIBUTION CENTER
(8W-10-10)
FUSE 10 20A (8W-10-29)
9
C5
L9 18 BK/WT
27
C2
RUN A22
(8W-10-14)
JUNCTION BLOCK
(8W-12-2)
FUSE 12 10A (8W-12-12)
1
FUSED B(+)
6
FUSED IGNITION (RUN)
COMBINATION FLASHER/ DRL MODULE
LEFT REAR TURN SIGNAL
RIGHT REAR TURN SIGNAL
4
5
28
C2
36
C2
L63 18 DG/RD
L63 18 DG/RD
L62 18 BR/RD
L62 18 BR/RD
1
LEFT REPEATER LAMP (BUILT-UP -EXPORT)
2
1
RIGHT REPEATER LAMP (BUILT-UP -EXPORT)
2
C
TO LEFT REAR LAMP ASSEMBLY
(8W-51-4)
(8W-51-5)
D
TO RIGHT REAR LAMP ASSEMBLY
(8W-51-4)
(8W-51-5)
Z1 18 BK
Z1 18 BK
14
G300
(8W-15-5)
10
G301
(8W-15-10)

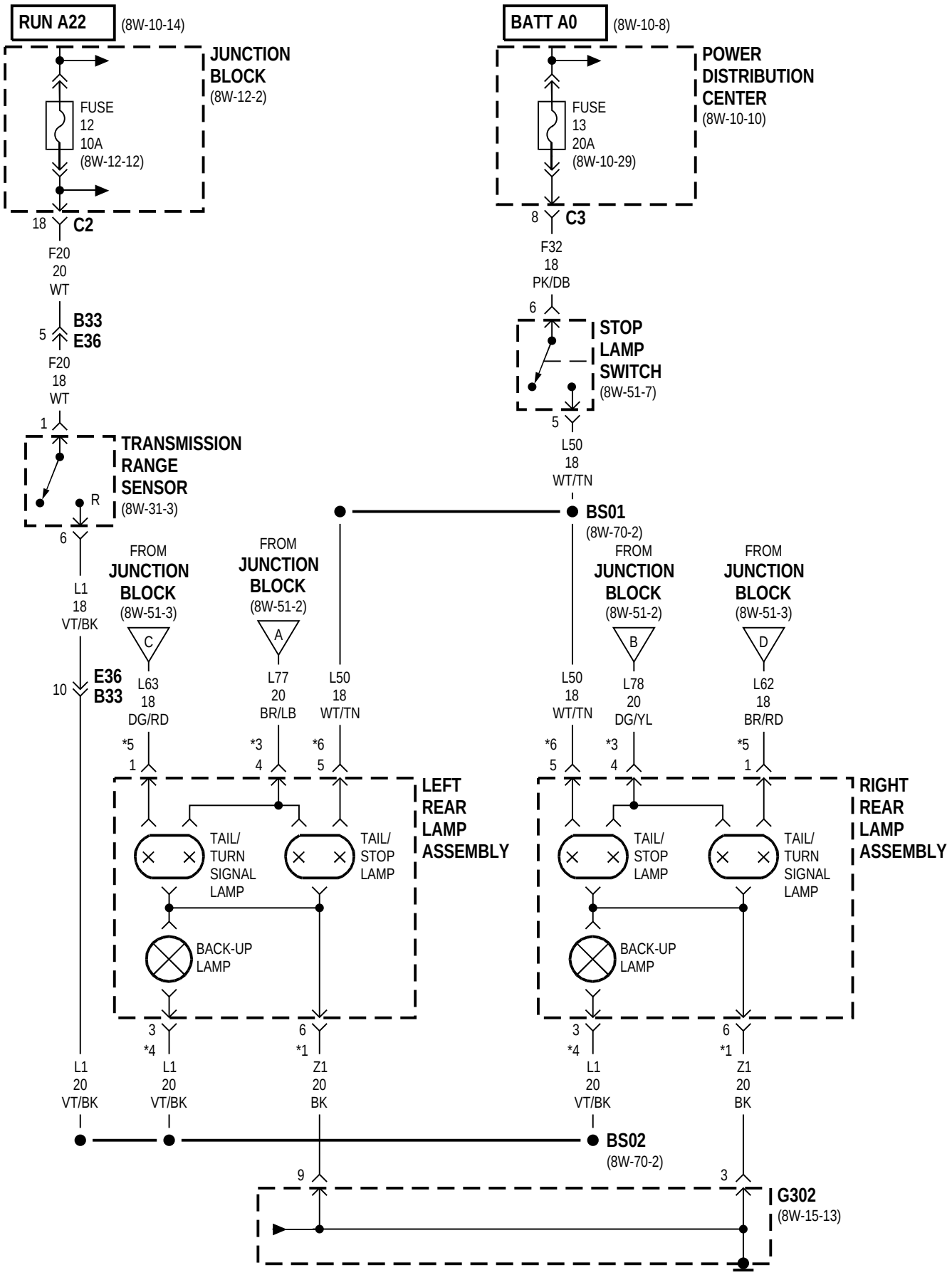
RUN A22
(8W-10-14)
JUNCTION BLOCK
(8W-12-2)
FUSE 12 10A
(8W-12-12)
18 C2
F20 20 WT
5 B33 E36
F20 18 WT
1
TRANSMISSION RANGE SENSOR
(8W-31-3)
R
6
L1 18 VT/BK
10 E36 B33
BATT A0
(8W-10-8)
POWER DISTRIBUTION CENTER
(8W-10-10)
FUSE 13 20A
(8W-10-29)
8 C3
F32 18 PK/DB
6
STOP LAMP SWITCH
(8W-51-7)
5
L50 18 WT/TN
BS01
(8W-70-2)
FROM JUNCTION BLOCK
(8W-51-3)
C
L63 18 DG/RD
*5 1
FROM JUNCTION BLOCK
(8W-51-2)
A
L77 20 BR/LB
*3 4
L50 18 WT/TN
*6 5
FROM JUNCTION BLOCK
(8W-51-2)
B
L78 20 DG/YL
*3 4
L50 18 WT/TN
*6 5
FROM JUNCTION BLOCK
(8W-51-3)
D
L62 18 BR/RD
*5 1
LEFT REAR LAMP ASSEMBLY
TAIL/ TURN SIGNAL LAMP
TAIL/ STOP LAMP
BACK-UP LAMP
RIGHT REAR LAMP ASSEMBLY
TAIL/ STOP LAMP
TAIL/ TURN SIGNAL LAMP
BACK-UP LAMP
3 *4
6 *1
L1 20 VT/BK
L1 20 VT/BK
Z1 20 BK
L1 20 VT/BK
Z1 20 BK
BS02
(8W-70-2)
9
3
G302
(8W-15-13)

MTX

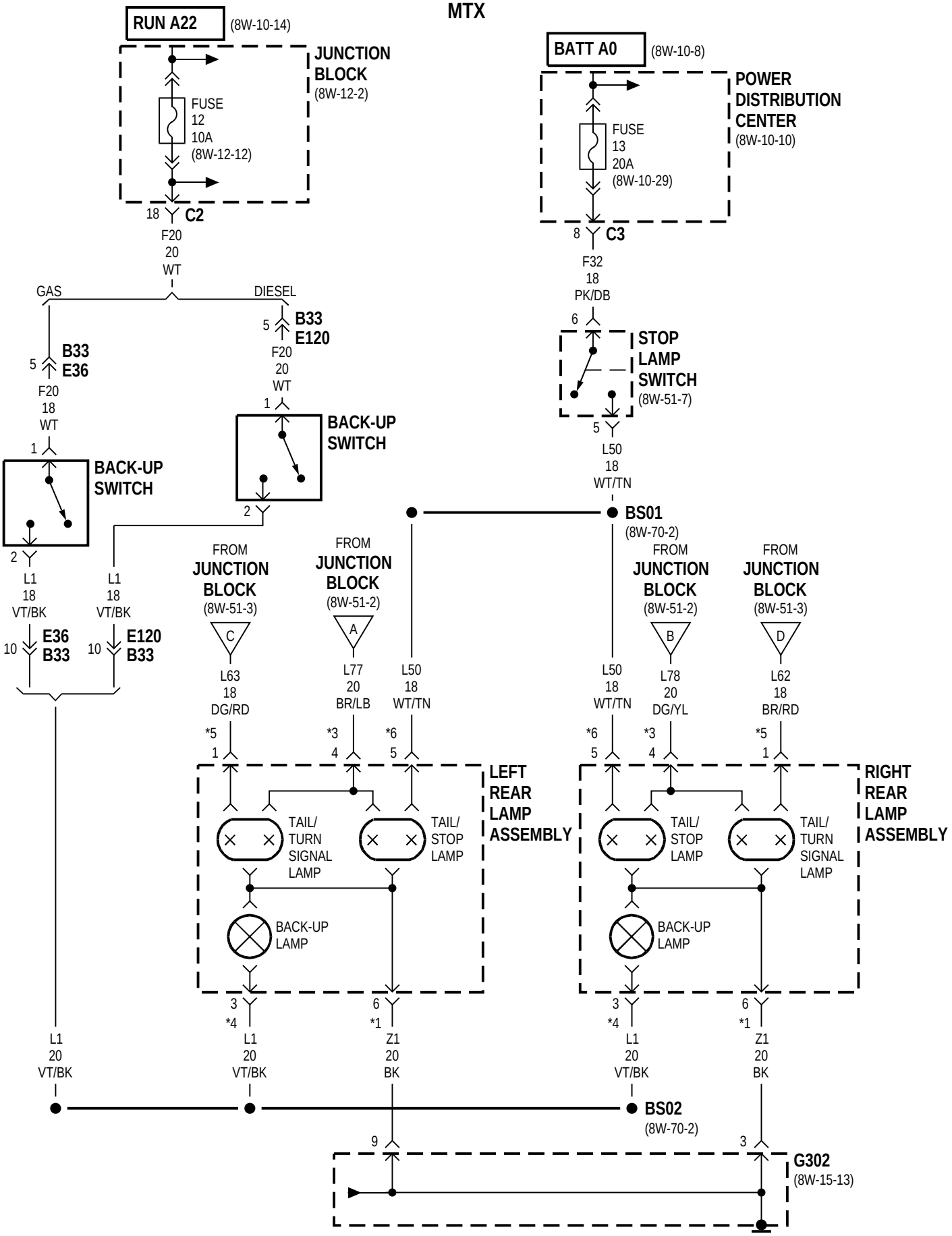
RUN A22
(8W-10-14)
JUNCTION BLOCK
(8W-12-2)
FUSE 12 10A
(8W-12-12)
18 C2
F20 20 WT
BATT A0
(8W-10-8)
POWER DISTRIBUTION CENTER
(8W-10-10)
FUSE 13 20A
(8W-10-29)
8 C3
F32 18 PK/DB
GAS
DIESEL
5 B33 E36
F20 18 WT
1 BACK-UP SWITCH
2
L1 18 VT/BK
10 E36 B33
10 E120 B33
5 B33 E120
F20 20 WT
1 BACK-UP SWITCH
2
6 STOP LAMP SWITCH
(8W-51-7)
5
L50 18 WT/TN
BS01
(8W-70-2)
FROM JUNCTION BLOCK
(8W-51-3)
C
L63 18 DG/RD
*5 1
FROM JUNCTION BLOCK
(8W-51-2)
A
L77 20 BR/LB
*3 4
L50 18 WT/TN
*6 5
FROM JUNCTION BLOCK
(8W-51-2)
B
L78 20 DG/YL
*3 4
L50 18 WT/TN
*6 5
FROM JUNCTION BLOCK
(8W-51-3)
D
L62 18 BR/RD
*5 1
LEFT REAR LAMP ASSEMBLY
TAIL/ TURN SIGNAL LAMP
TAIL/ STOP LAMP
BACK-UP LAMP
RIGHT REAR LAMP ASSEMBLY
TAIL/ STOP LAMP
TAIL/ TURN SIGNAL LAMP
BACK-UP LAMP
3 *4
6 *1
L1 20 VT/BK
Z1 20 BK
BS02
(8W-70-2)
9
3
G302
(8W-15-13)

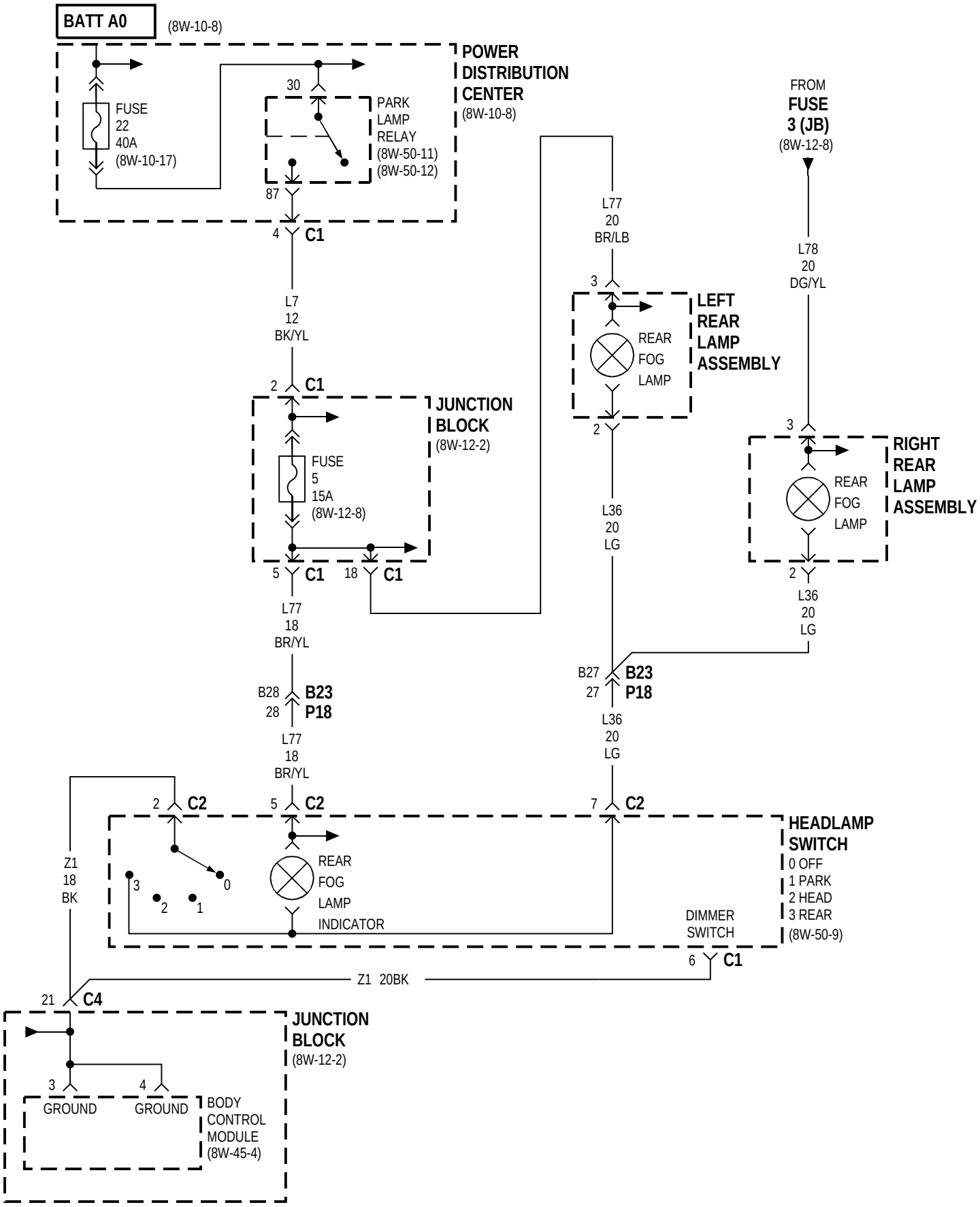
BATT A0
(8W-10-8)
POWER DISTRIBUTION CENTER
(8W-10-8)
FUSE 22 40A (8W-10-17)
30
PARK LAMP RELAY (8W-50-11) (8W-50-12)
87
4 C1
L7 12 BK/YL
2 C1
JUNCTION BLOCK
(8W-12-2)
FUSE 5 15A (8W-12-8)
5 C1
18 C1
L77 18 BR/YL
B28 28 B23 P18
L77 18 BR/YL
2 C2
5 C2
7 C2
Z1 18 BK
3
2
1
0
REAR FOG LAMP INDICATOR
HEADLAMP SWITCH
0 OFF
1 PARK
2 HEAD
3 REAR
(8W-50-9)
DIMMER SWITCH
6 C1
Z1 20BK
21 C4
JUNCTION BLOCK
(8W-12-2)
3 GROUND
4 GROUND
BODY CONTROL MODULE
(8W-45-4)
L77 20 BR/LB
3
LEFT REAR LAMP ASSEMBLY
REAR FOG LAMP
2
L36 20 LG
B27 27 B23 P18
L36 20 LG
FROM FUSE 3 (JB)
(8W-12-8)
L78 20 DG/YL
3
RIGHT REAR LAMP ASSEMBLY
REAR FOG LAMP
2
L36 20 LG

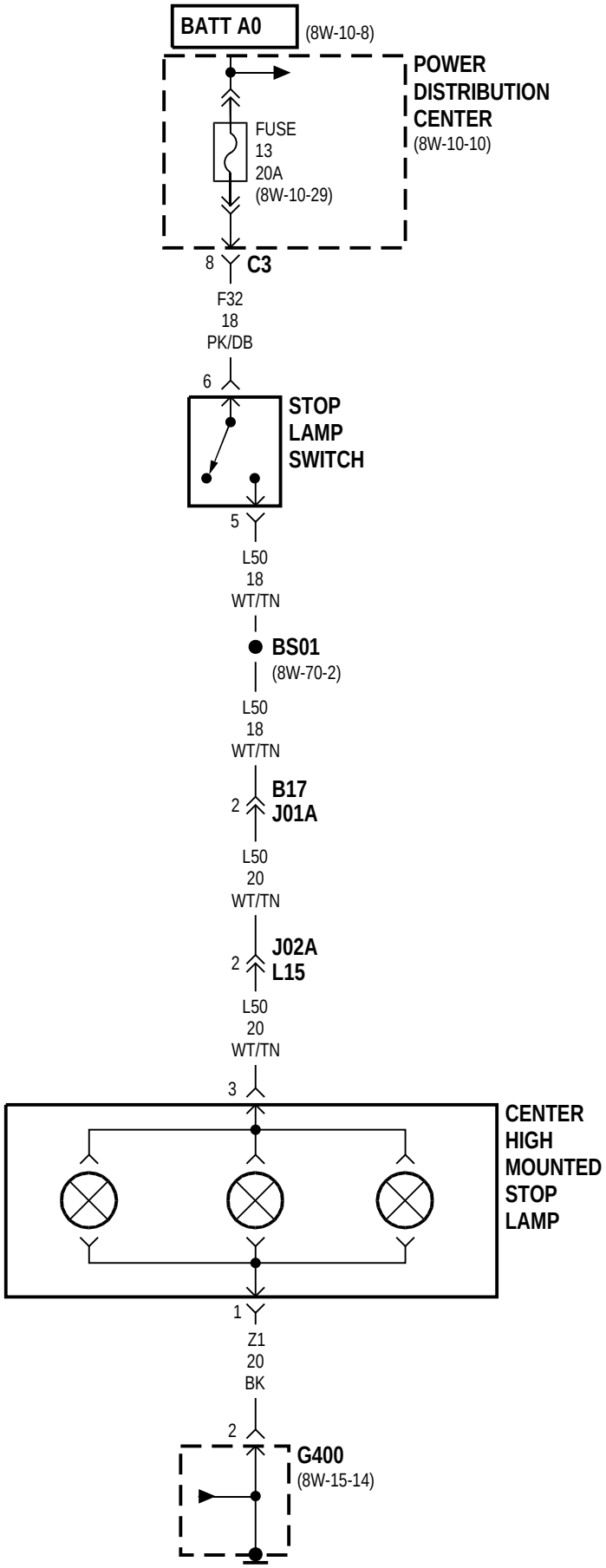
BATT A0
(8W-10-8)
POWER
DISTRIBUTION
CENTER
(8W-10-10)
FUSE
13
20A
(8W-10-29)
8
C3
F32
18
PK/DB
6
STOP
LAMP
SWITCH
5
L50
18
WT/TN
BS01
(8W-70-2)
L50
18
WT/TN
2
B17
J01A
L50
20
WT/TN
2
J02A
L15
L50
20
WT/TN
3
CENTER
HIGH
MOUNTED
STOP
LAMP
1
Z1
20
BK
2
G400
(8W-15-14)

8W-52 TURN SIGNALS

Component	Page
Body Control Module	8W-52-2, 3
Combination Flasher/DRL Module	8W-52-2, 3
Fuse 10 (PDC)	8W-52-2, 3
Fuse 12 (JB)	8W-52-2, 3
G200	8W-52-2, 3
G300	8W-52-2, 3
G301	8W-52-3
G302	8W-52-2, 3
Junction Block	8W-52-2, 3
Left Front Park/Turn Signal Lamp	8W-52-2
Left Rear Lamp Assembly	8W-52-2
Left Repeater Lamp	8W-52-2
Left Turn Indicator	8W-52-2
Message Center	8W-52-2, 3
Power Distribution Center	8W-52-2, 3
Right Front Park/Turn Signal Lamp	8W-52-3
Right Rear Lamp Assembly	8W-52-3
Right Repeater Lamp	8W-52-3
Right Turn Indicator	8W-52-3
Tail/Turn Signal Lamp	8W-52-2, 3
Turn Signal/Hazard Switch	8W-52-2, 3

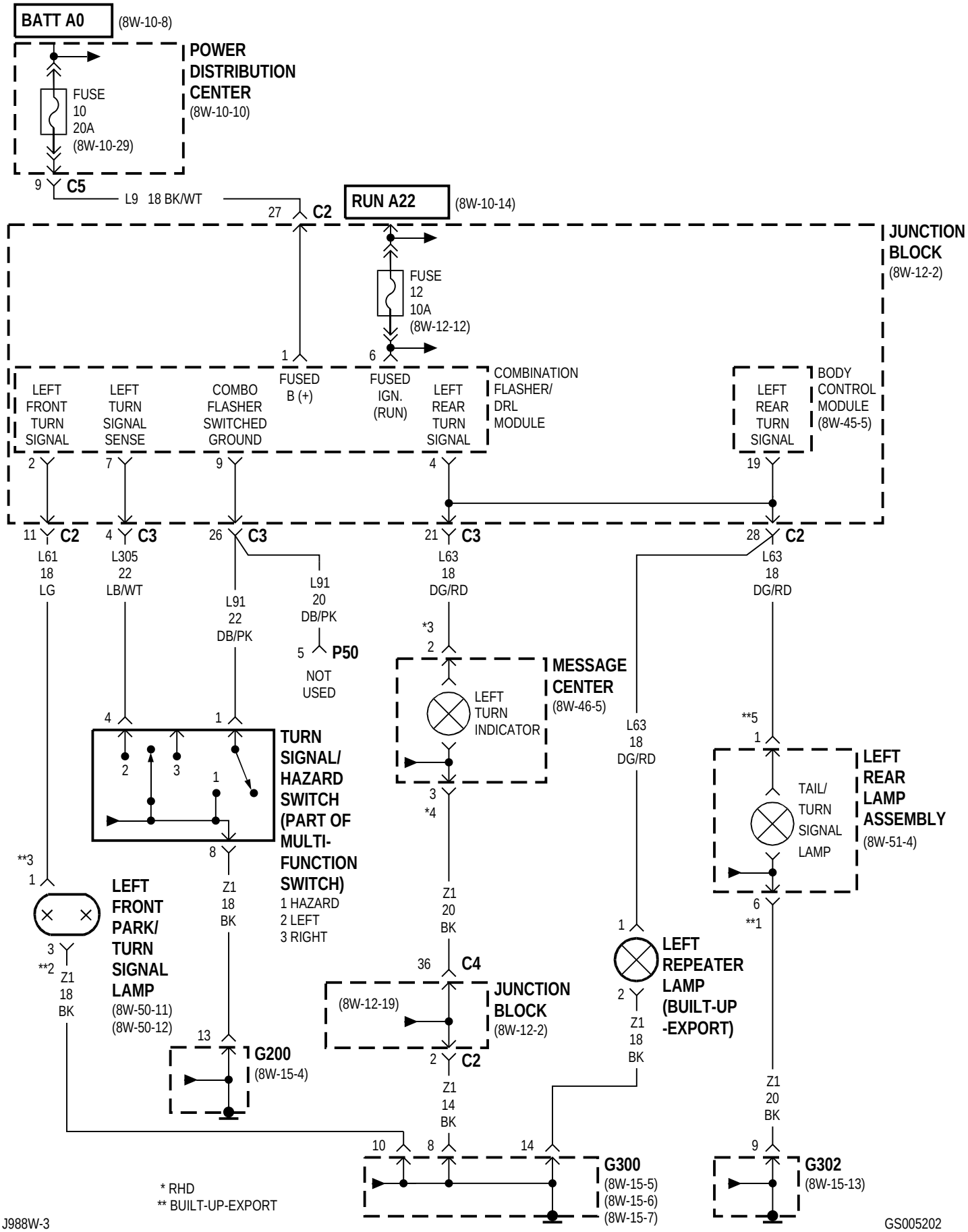
BATT A0
(8W-10-8)
POWER DISTRIBUTION CENTER
(8W-10-10)
FUSE 10 20A
(8W-10-29)
9 C5
L9 18 BK/WT
27 C2
RUN A22
(8W-10-14)
JUNCTION BLOCK
(8W-12-2)
FUSE 12 10A
(8W-12-12)
1
6
LEFT FRONT TURN SIGNAL
LEFT TURN SIGNAL SENSE
COMBO FLASHER SWITCHED GROUND
FUSED B (+)
FUSED IGN. (RUN)
LEFT REAR TURN SIGNAL
COMBINATION FLASHER/ DRL MODULE
LEFT REAR TURN SIGNAL
BODY CONTROL MODULE (8W-45-5)
2
7
9
4
19
11 C2
4 C3
26 C3
21 C3
28 C2
L61 18 LG
L305 22 LB/WT
L91 22 DB/PK
L91 20 DB/PK
5 P50
NOT USED
L63 18 DG/RD
L63 18 DG/RD
L63 18 DG/RD
*3
2
MESSAGE CENTER
(8W-46-5)
LEFT TURN INDICATOR
3
*4
**5
1
4
1
2
3
1
8
TURN SIGNAL/ HAZARD SWITCH (PART OF MULTI-FUNCTION SWITCH)
1 HAZARD
2 LEFT
3 RIGHT
TAIL/ TURN SIGNAL LAMP
LEFT REAR LAMP ASSEMBLY
(8W-51-4)
6
**1
**3
1
3
**2
Z1 18 BK
LEFT FRONT PARK/ TURN SIGNAL LAMP
(8W-50-11)
(8W-50-12)
Z1 18 BK
Z1 20 BK
36 C4
(8W-12-19)
JUNCTION BLOCK
(8W-12-2)
2 C2
Z1 14 BK
1
2
Z1 18 BK
LEFT REPEATER LAMP (BUILT-UP -EXPORT)
Z1 20 BK
13
G200
(8W-15-4)
10
8
14
9
G300
(8W-15-5)
(8W-15-6)
(8W-15-7)
G302
(8W-15-13)
* RHD
** BUILT-UP-EXPORT

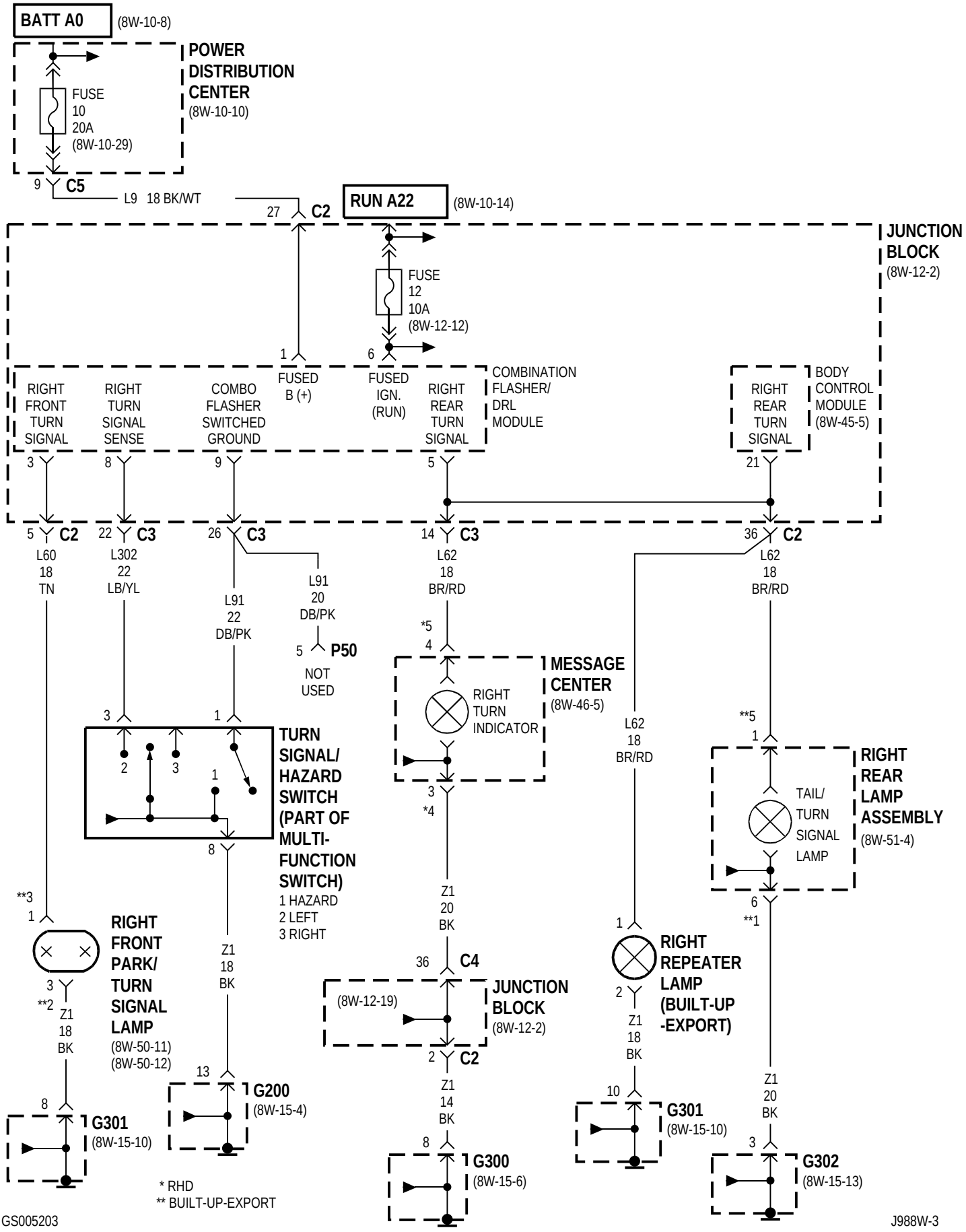
BATT A0
(8W-10-8)
POWER DISTRIBUTION CENTER
(8W-10-10)
FUSE 10 20A
(8W-10-29)
9 C5
L9 18 BK/WT
27 C2
RUN A22
(8W-10-14)
JUNCTION BLOCK
(8W-12-2)
FUSE 12 10A
(8W-12-12)
1
6
RIGHT FRONT TURN SIGNAL
RIGHT TURN SIGNAL SENSE
COMBO FLASHER SWITCHED GROUND
FUSED B (+)
FUSED IGN. (RUN)
RIGHT REAR TURN SIGNAL
COMBINATION FLASHER/ DRL MODULE
RIGHT REAR TURN SIGNAL
BODY CONTROL MODULE
(8W-45-5)
3
8
9
5
21
5 C2
22 C3
26 C3
14 C3
36 C2
L60 18 TN
L302 22 LB/YL
L91 22 DB/PK
L91 20 DB/PK
5 P50
NOT USED
L62 18 BR/RD
L62 18 BR/RD
*5
4
MESSAGE CENTER
(8W-46-5)
RIGHT TURN INDICATOR
3
*4
L62 18 BR/RD
**5
1
RIGHT REAR LAMP ASSEMBLY
(8W-51-4)
TAIL/ TURN SIGNAL LAMP
6
**1
3
1
2
1
8
TURN SIGNAL/ HAZARD SWITCH (PART OF MULTI-FUNCTION SWITCH)
1 HAZARD
2 LEFT
3 RIGHT
**3
1
RIGHT FRONT PARK/ TURN SIGNAL LAMP
(8W-50-11)
(8W-50-12)
3
**2
Z1 18 BK
Z1 18 BK
Z1 20 BK
36 C4
(8W-12-19)
JUNCTION BLOCK
(8W-12-2)
2 C2
Z1 14 BK
1
RIGHT REPEATER LAMP (BUILT-UP -EXPORT)
2
Z1 18 BK
10
G301
(8W-15-10)
Z1 20 BK
3
G302
(8W-15-13)
8
G301
(8W-15-10)
13
G200
(8W-15-4)
8
G300
(8W-15-6)
* RHD
** BUILT-UP-EXPORT

8W-53 WIPERS

Component	Page
A/C Heater Control	8W-53-4
Body Control Module	8W-53-2, 3, 4, 5
Front Washer Motor	8W-53-3, 4, 5
Front Wiper Switch	8W-53-2, 3, 5
Fuse 5 (JB)	8W-53-5
Fuse 6 (JB)	8W-53-4
Fuse 19 (PDC)	8W-53-2, 3
Fuse 22 (PDC)	8W-53-5
G200	8W-53-3, 4
G300	8W-53-2, 3
G301	8W-53-3, 5
G400	8W-53-4
Headlamp Washer	8W-53-5
HVAC Control	8W-53-4
Junction Block	8W-53-2, 3, 4, 5
Low Washer Fluid Switch	8W-53-3
Park Lamp Relay	8W-53-5
Power Distribution Center	8W-53-2, 3, 5
PTC 3 (JB)	8W-53-5
PTC 7 (JB)	8W-53-2, 3, 4, 5
Rear Washer Motor	8W-53-3, 4
Rear Washer Switch	8W-53-4
Rear Wiper Delay On Indicator	8W-53-4
Rear Wiper Delay Switch	8W-53-4
Rear Wiper Motor	8W-53-4
Rear Wiper On Indicator	8W-53-4
Rear Wiper On Switch	8W-53-4
Washer Module	8W-53-3, 5
Wiper High/Low Relay	8W-53-2, 3
Wiper Module	8W-53-2
Wiper On Relay	8W-53-2, 3

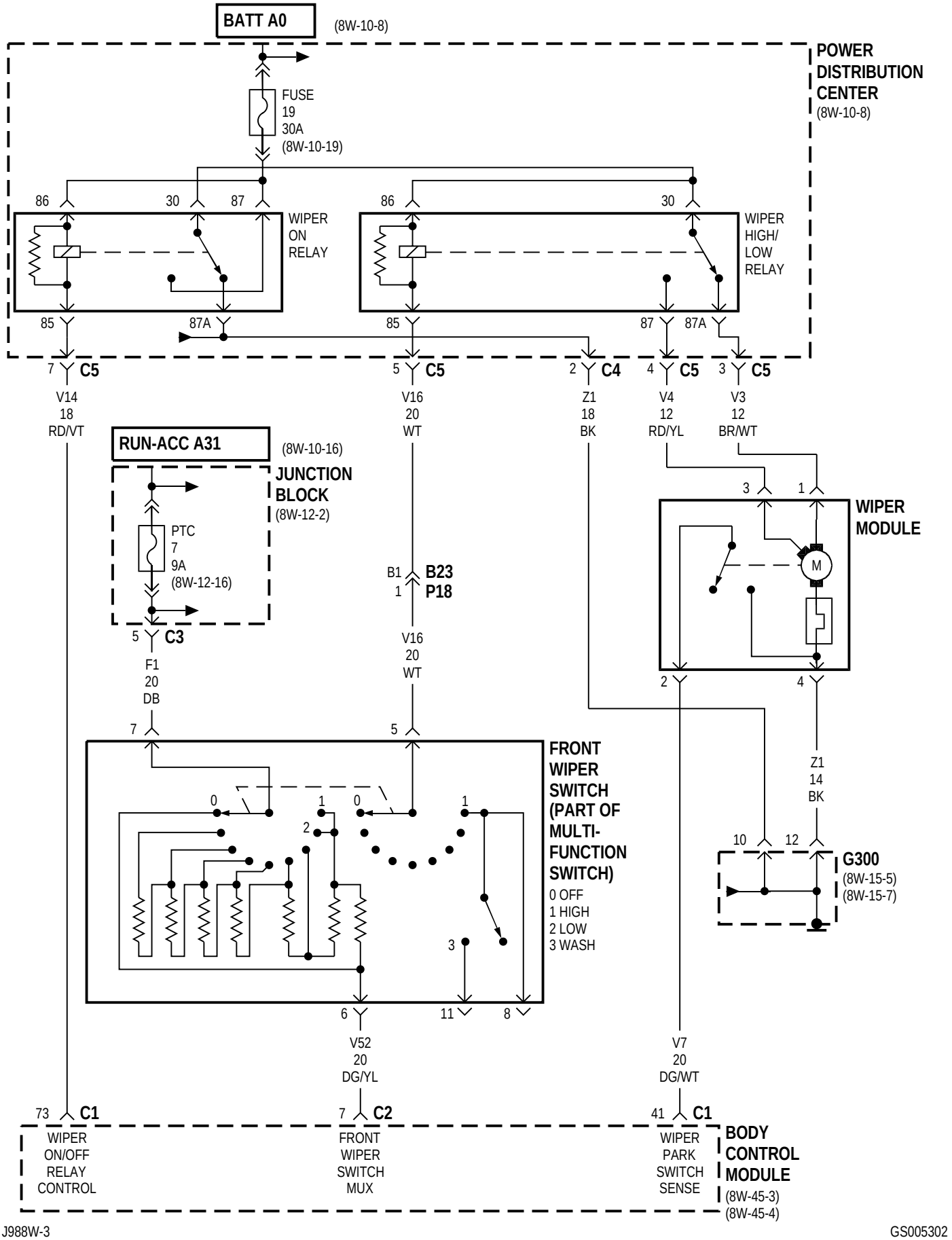
BATT A0
(8W-10-8)
POWER DISTRIBUTION CENTER
(8W-10-8)
FUSE 19 30A (8W-10-19)
86
30
87
WIPER ON RELAY
85
87A
WIPER HIGH/ LOW RELAY
87
7 C5
V14 18 RD/VT
5 C5
V16 20 WT
2 C4
Z1 18 BK
4 C5
V4 12 RD/YL
3 C5
V3 12 BR/WT
RUN-ACC A31
(8W-10-16)
JUNCTION BLOCK
(8W-12-2)
PTC 7 9A (8W-12-16)
5 C3
F1 20 DB
B1 1 B23 P18
V16 20 WT
WIPER MODULE
M
3
1
2
4
Z1 14 BK
10
12
G300
(8W-15-5)
(8W-15-7)
FRONT WIPER SWITCH (PART OF MULTI-FUNCTION SWITCH)
0 OFF
1 HIGH
2 LOW
3 WASH
6
11
8
V52 20 DG/YL
V7 20 DG/WT
73 C1
WIPER ON/OFF RELAY CONTROL
7 C2
FRONT WIPER SWITCH MUX
41 C1
WIPER PARK SWITCH SENSE
BODY CONTROL MODULE
(8W-45-3)
(8W-45-4)

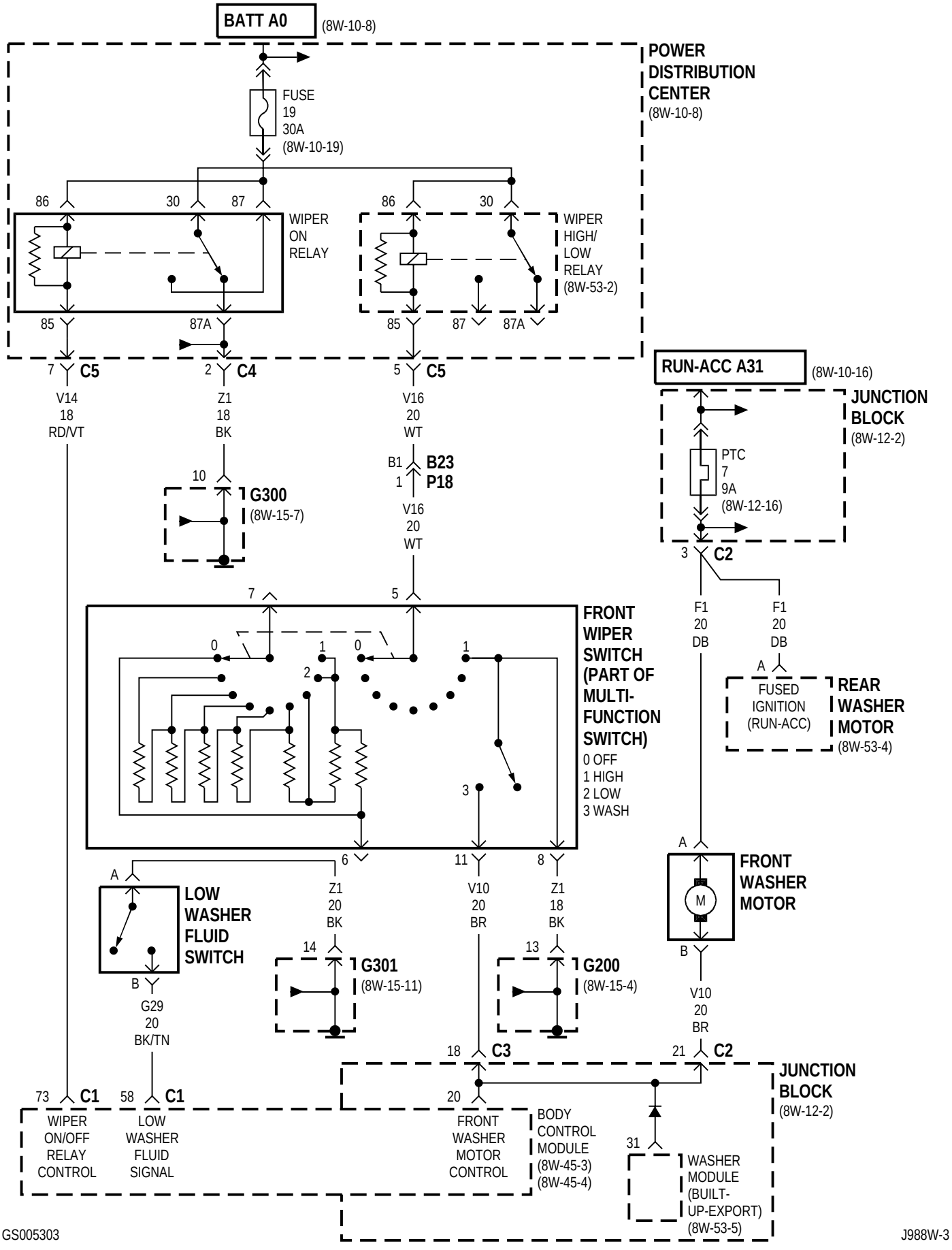
BATT A0
(8W-10-8)
POWER DISTRIBUTION CENTER
(8W-10-8)
FUSE 19 30A
(8W-10-19)
86
30
87
WIPER ON RELAY
85
87A
WIPER HIGH/ LOW RELAY
(8W-53-2)
87
RUN-ACC A31
(8W-10-16)
JUNCTION BLOCK
(8W-12-2)
PTC 7 9A
(8W-12-16)
7 C5
V14 18 RD/VT
2 C4
Z1 18 BK
5 C5
V16 20 WT
B1 B23
1 P18
V16 20 WT
10
G300
(8W-15-7)
3 C2
F1 20 DB
F1 20 DB
A
FUSED IGNITION (RUN-ACC)
REAR WASHER MOTOR
(8W-53-4)
FRONT WIPER SWITCH (PART OF MULTI-FUNCTION SWITCH)
0 OFF
1 HIGH
2 LOW
3 WASH
0
1
2
3
6
11
8
A
LOW WASHER FLUID SWITCH
B
G29 20 BK/TN
Z1 20 BK
V10 20 BR
Z1 18 BK
14
G301
(8W-15-11)
13
G200
(8W-15-4)
FRONT WASHER MOTOR
M
V10 20 BR
18 C3
21 C2
JUNCTION BLOCK
(8W-12-2)
73 C1
58 C1
20
WIPER ON/OFF RELAY CONTROL
LOW WASHER FLUID SIGNAL
FRONT WASHER MOTOR CONTROL
BODY CONTROL MODULE
(8W-45-3)
(8W-45-4)
31
WASHER MODULE (BUILT-UP-EXPORT)
(8W-53-5)

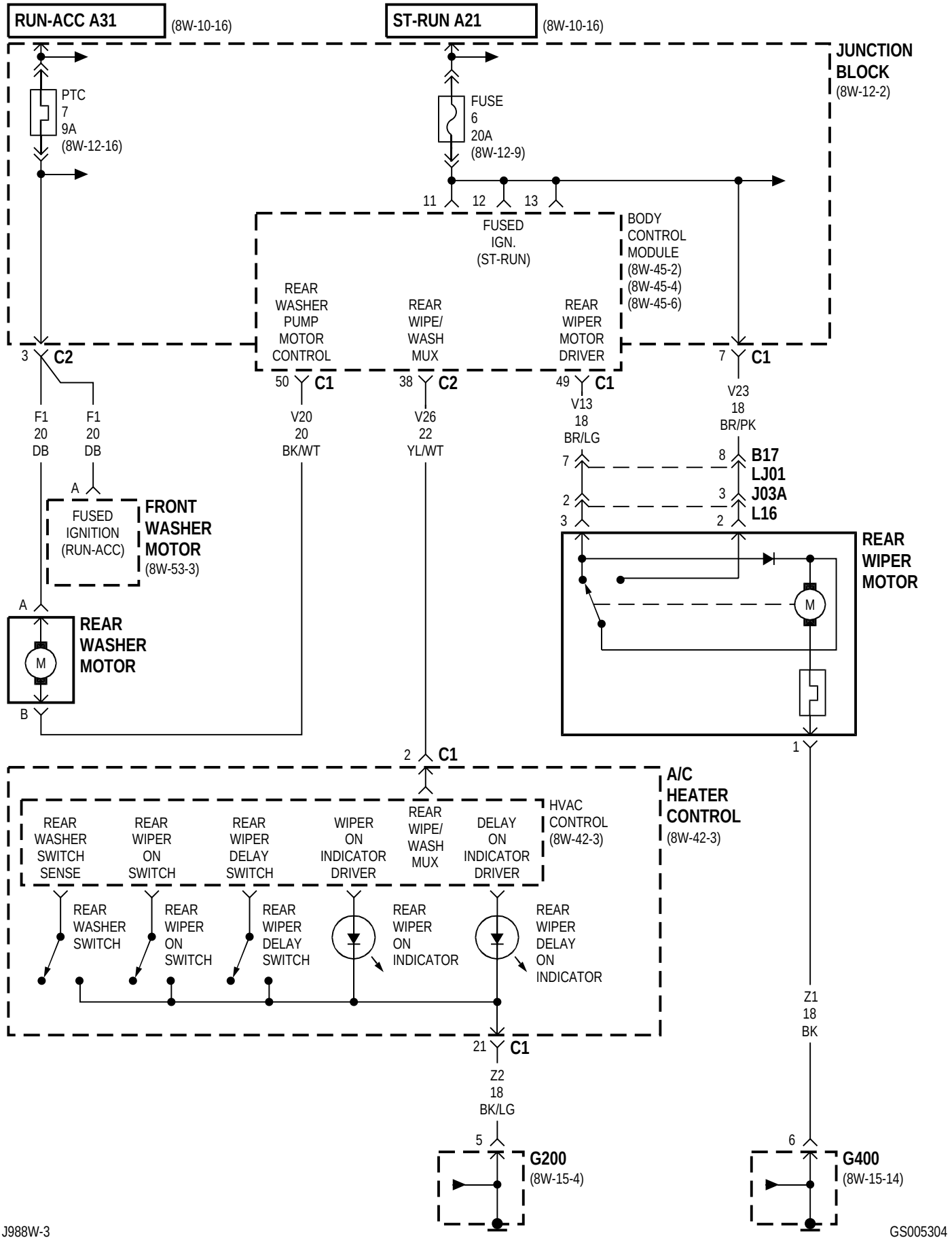
RUN-ACC A31
(8W-10-16)
ST-RUN A21
(8W-10-16)
JUNCTION BLOCK
(8W-12-2)
PTC
7
9A
(8W-12-16)
FUSE
6
20A
(8W-12-9)
11
12
13
FUSED IGN. (ST-RUN)
BODY CONTROL MODULE
(8W-45-2)
(8W-45-4)
(8W-45-6)
REAR WASHER PUMP MOTOR CONTROL
REAR WIPE/ WASH MUX
REAR WIPER MOTOR DRIVER
3 C2
50 C1
38 C2
49 C1
7 C1
F1
20
DB
F1
20
DB
V20
20
BK/WT
V26
22
YL/WT
V13
18
BR/LG
V23
18
BR/PK
A
FUSED IGNITION (RUN-ACC)
FRONT WASHER MOTOR
(8W-53-3)
7
2
3
8
3
2
B17
LJ01
J03A
L16
REAR WIPER MOTOR
A
M
REAR WASHER MOTOR
B
1
2 C1
A/C HEATER CONTROL
(8W-42-3)
HVAC CONTROL
(8W-42-3)
REAR WASHER SWITCH SENSE
REAR WIPER ON SWITCH
REAR WIPER DELAY SWITCH
WIPER ON INDICATOR DRIVER
REAR WIPE/ WASH MUX
DELAY ON INDICATOR DRIVER
REAR WASHER SWITCH
REAR WIPER ON SWITCH
REAR WIPER DELAY SWITCH
REAR WIPER ON INDICATOR
REAR WIPER DELAY ON INDICATOR
Z1
18
BK
21 C1
Z2
18
BK/LG
5
6
G200
(8W-15-4)
G400
(8W-15-14)

BUILT-UP-EXPORT

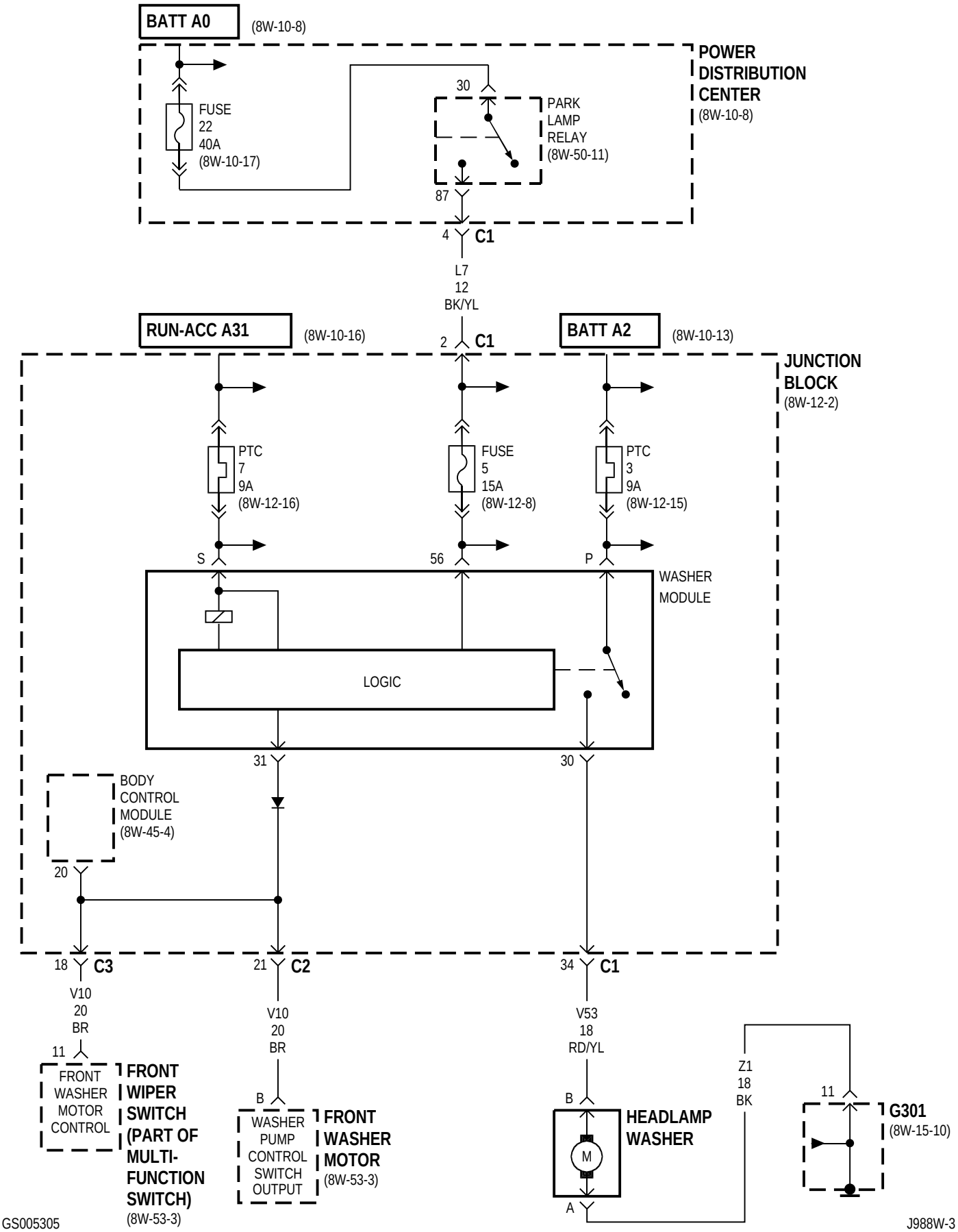

8W-54 TRAILER TOW

Component	Page
Body Control Module	8W-54-2
BS01	8W-54-3
Combination Flasher/DRL Module	8W-54-2
Fuse 1 (JB)	8W-54-2
Fuse 3 (JB)	8W-54-2
Fuse 5 (JB)	8W-54-2
Fuse 22 (PDC)	8W-54-2
G302	8W-54-3
Junction Block	8W-54-2
Left Combination Relay	8W-54-2, 3
Left Rear Lamp Assembly	8W-54-2, 3
Left Stop/Turn Signal Relay	8W-54-2, 3
License Lamp	8W-54-2
Park Lamp Relay	8W-54-2
Power Distribution Center	8W-54-2
Right Combination Relay	8W-54-2, 3
Right Front Park/Turn Signal Lamp	8W-54-2
Right Rear Lamp Assembly	8W-54-2, 3
Right Stop/Turn Signal Relay	8W-54-2, 3
Stop Lamp Switch	8W-54-3
Trailer Tow Connector	8W-54-2, 3

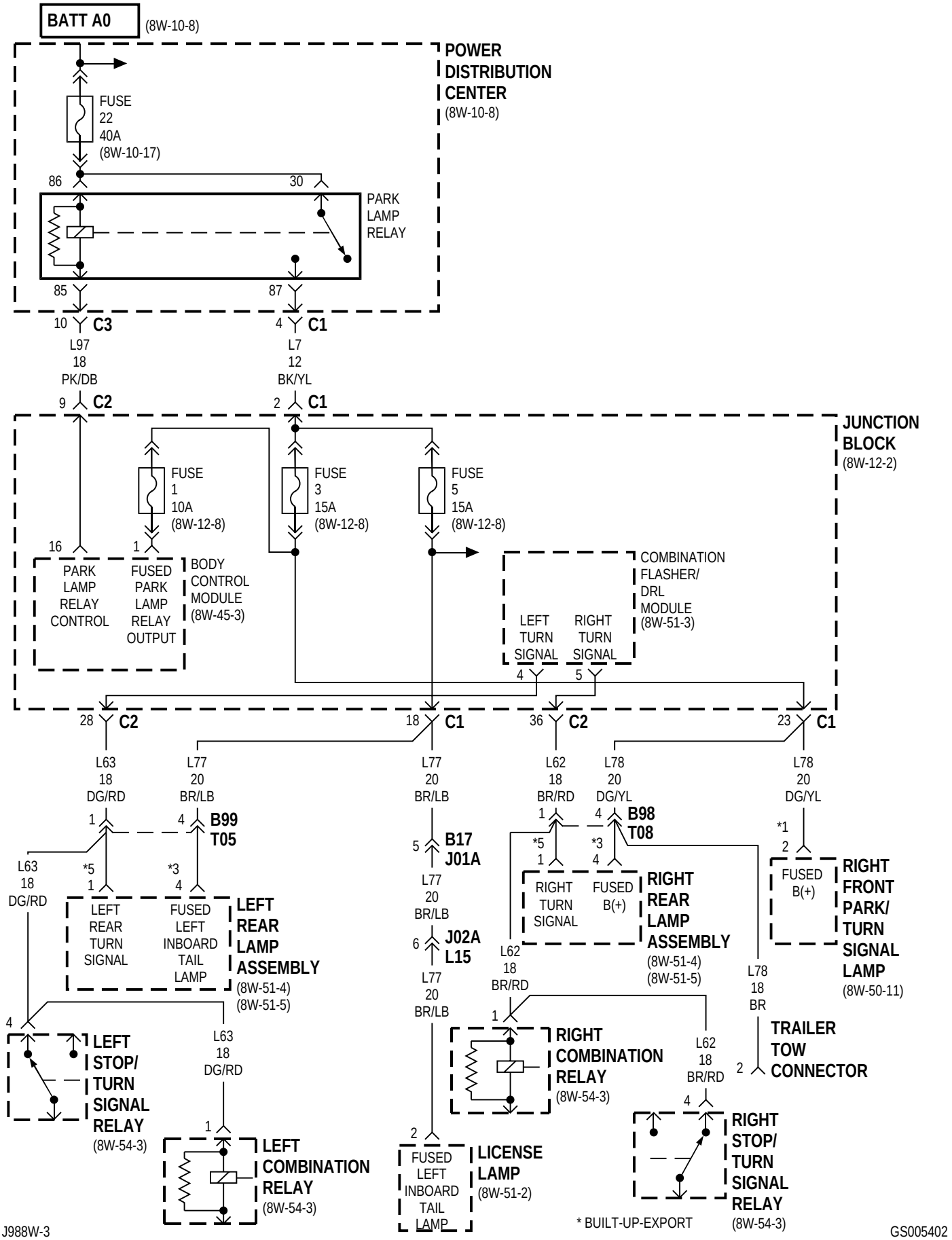
BATT A0
(8W-10-8)
POWER DISTRIBUTION CENTER
(8W-10-8)
FUSE 22 40A (8W-10-17)
86
30
PARK LAMP RELAY
85
87
10 C3
L97 18 PK/DB
4 C1
L7 12 BK/YL
9 C2
2 C1
JUNCTION BLOCK
(8W-12-2)
FUSE 1 10A (8W-12-8)
FUSE 3 15A (8W-12-8)
FUSE 5 15A (8W-12-8)
16
1
PARK LAMP RELAY CONTROL
FUSED PARK LAMP RELAY OUTPUT
BODY CONTROL MODULE
(8W-45-3)
COMBINATION FLASHER/ DRL MODULE
(8W-51-3)
LEFT TURN SIGNAL
RIGHT TURN SIGNAL
4
5
28 C2
18 C1
36 C2
23 C1
L63 18 DG/RD
L77 20 BR/LB
L77 20 BR/LB
L62 18 BR/RD
L78 20 DG/YL
L78 20 DG/YL
1
4 B99 T05
5 B17 J01A
1
4 B98 T08
*1
2
L63 18 DG/RD
*5
1
*3
4
*5
1
*3
4
LEFT REAR TURN SIGNAL
FUSED LEFT INBOARD TAIL LAMP
LEFT REAR LAMP ASSEMBLY
(8W-51-4)
(8W-51-5)
L77 20 BR/LB
6 J02A L15
RIGHT TURN SIGNAL
FUSED B(+)
RIGHT REAR LAMP ASSEMBLY
(8W-51-4)
(8W-51-5)
FUSED B(+)
RIGHT FRONT PARK/ TURN SIGNAL LAMP
(8W-50-11)
L62 18 BR/RD
L78 18 BR
4
L63 18 DG/RD
1
RIGHT COMBINATION RELAY
(8W-54-3)
TRAILER TOW CONNECTOR
2
L62 18 BR/RD
4
LEFT STOP/ TURN SIGNAL RELAY
(8W-54-3)
1
LEFT COMBINATION RELAY
(8W-54-3)
2
FUSED LEFT INBOARD TAIL LAMP
LICENSE LAMP
(8W-51-2)
RIGHT STOP/ TURN SIGNAL RELAY
(8W-54-3)
* BUILT-UP-EXPORT

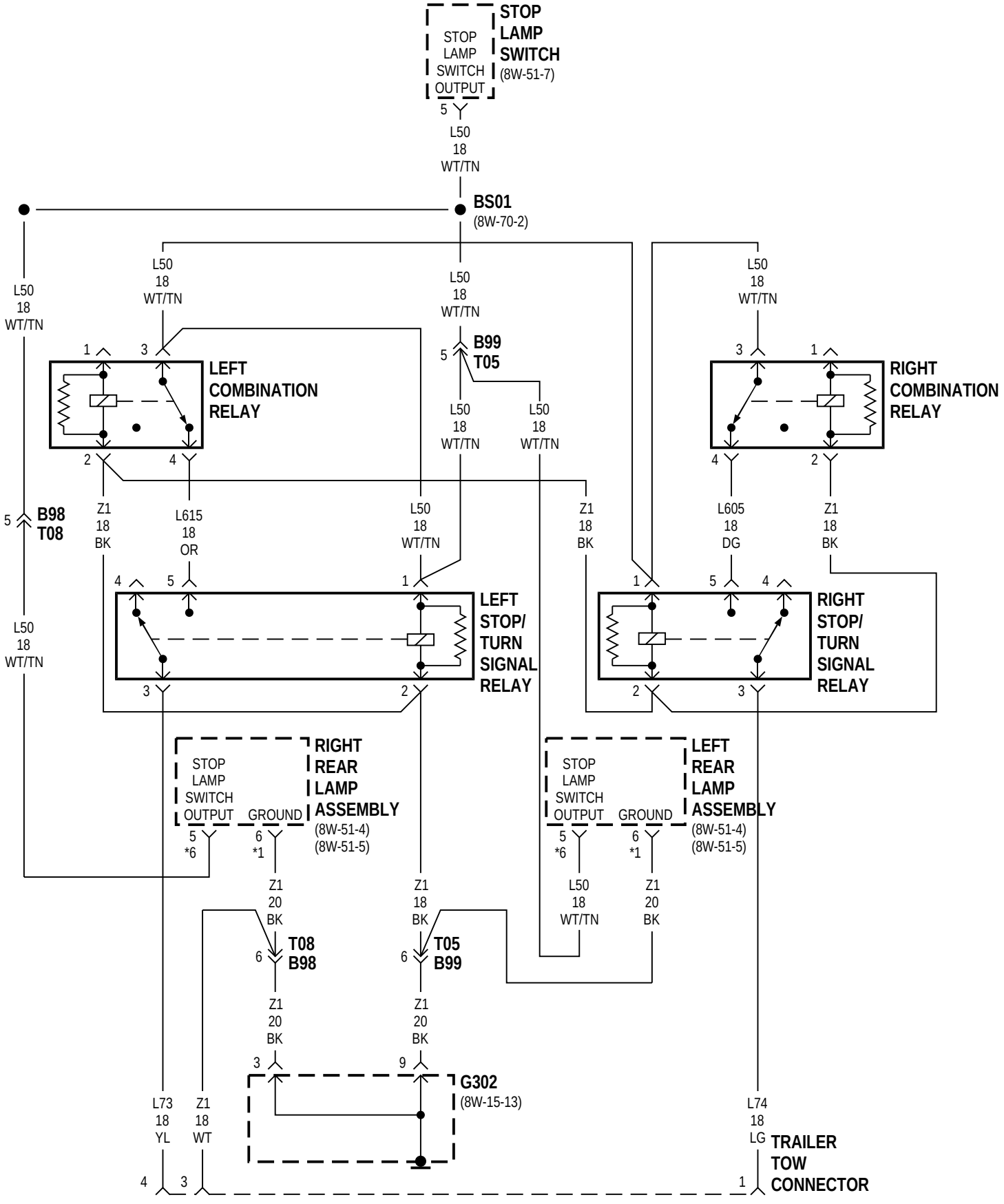

* BUILT-UP-EXPORT

8W-60 POWER WINDOWS

Component	Page
Body Control Module	8W-60-2, 3
Driver Door Lock Switch	8W-60-2
Driver Power Window Switch	8W-60-2, 3
Driver Window Motor	8W-60-2
DS01	8W-60-2, 3
Express Down Module	8W-60-2
G300	8W-60-2, 3
Junction Block	8W-60-2, 3
Left Rear Vent Motor	8W-60-2
Passenger Door Courtesy Lamp	8W-60-3
Passenger Door Lock Switch	8W-60-3
Passenger Power Window Switch	8W-60-3
Passenger Window Motor	8W-60-3
PTC 8 (JB)	8W-60-2, 3
PTC 9 (JB)	8W-60-2
Right Rear Vent Motor	8W-60-2

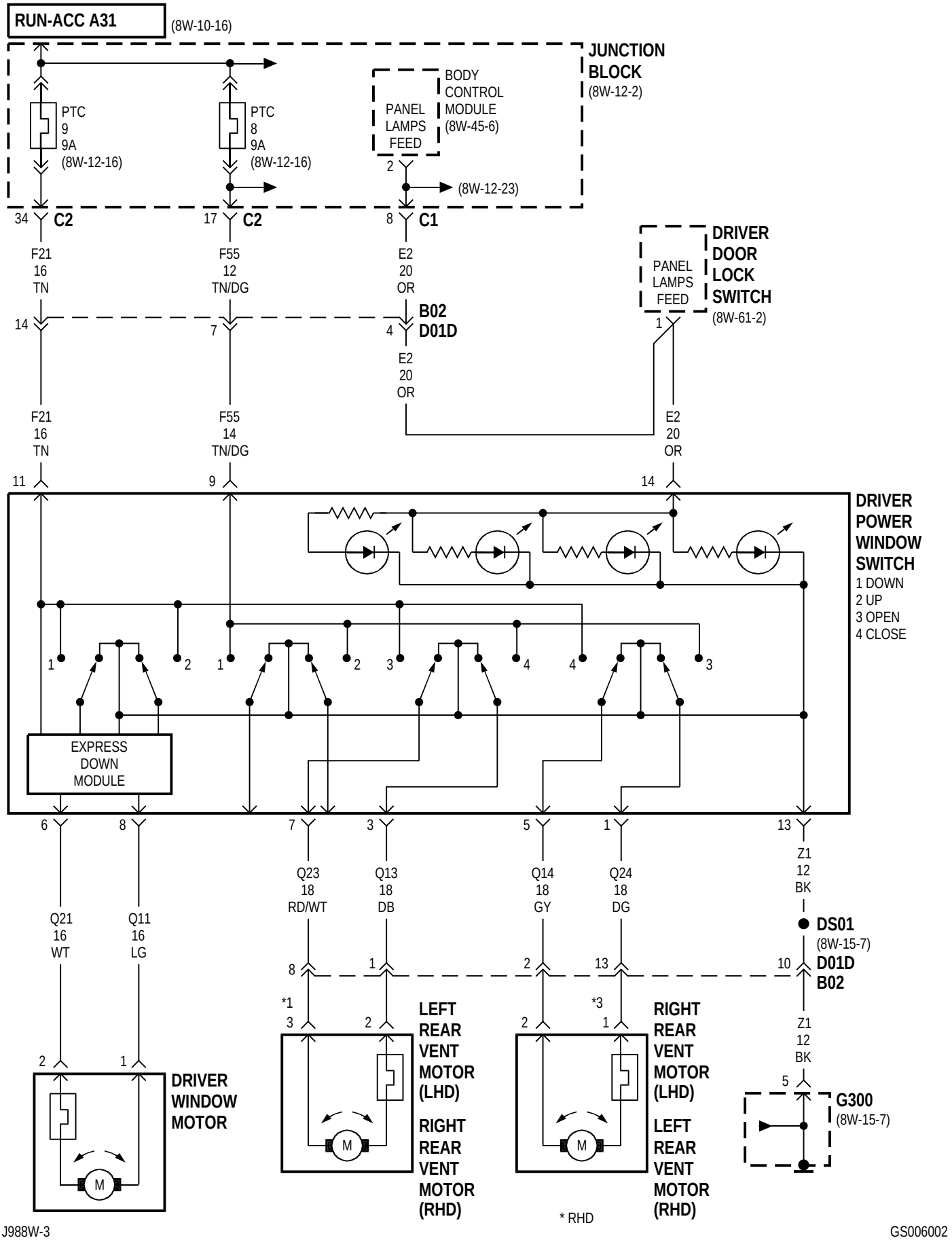

J988W-3

GS006002

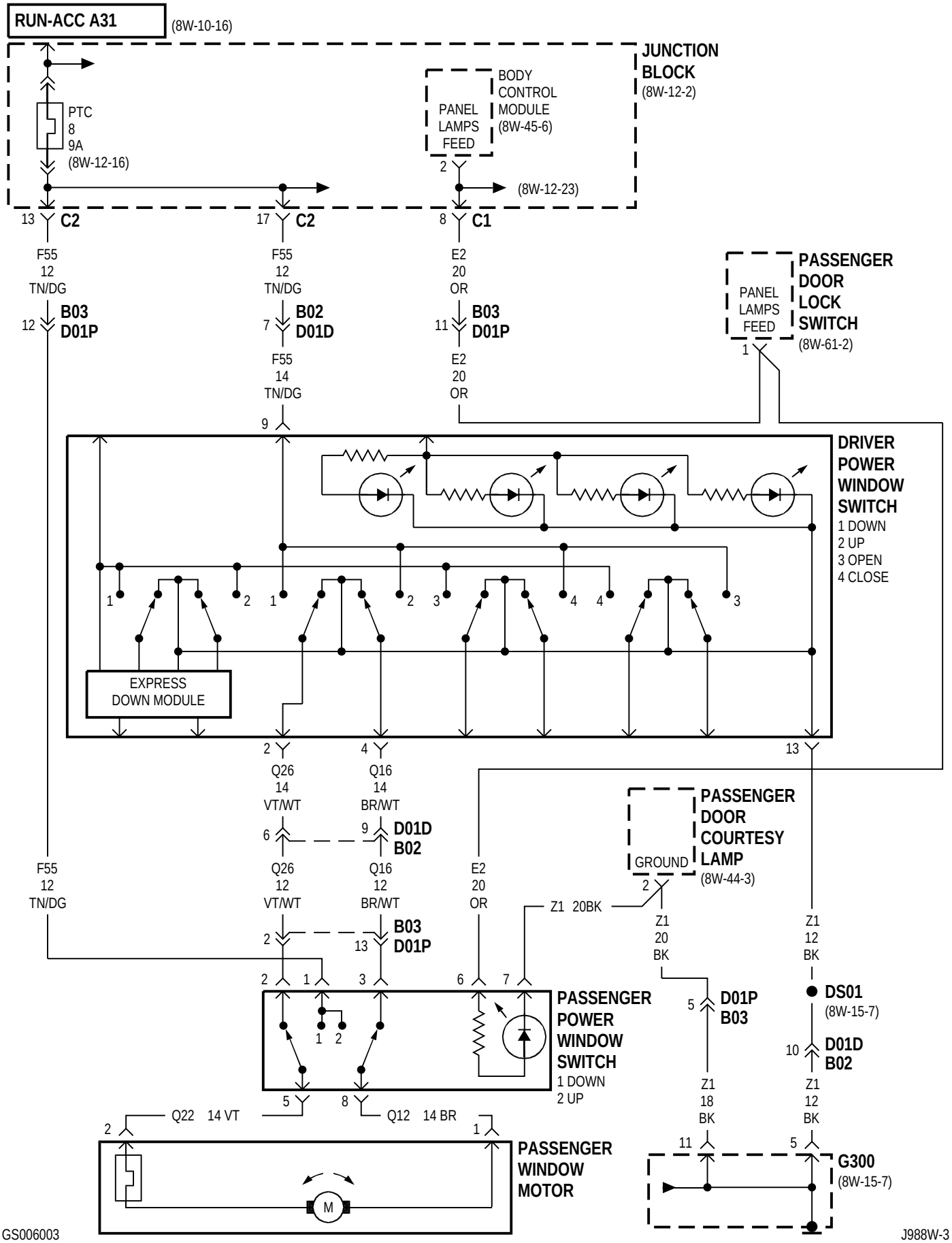

GS006003

J988W-3

8W-61 POWER DOOR LOCKS

Component	Page
Body Control Module	8W-61-2, 3, 4, 5, 6, 7, 8
Door Lock Relay	8W-61-3, 4, 7, 8
Door Unlock Relay	8W-61-3, 4, 7, 8
Driver Door Arm/Disarm Switch	8W-61-6
Driver Door Lock Motor	8W-61-3, 7
Driver Door Lock Switch	8W-61-2, 6
Driver Door Unlock Relay	8W-61-7, 8
Driver Power Window Switch	8W-61-2, 6
Fuse 28 (PDC)	8W-61-5
G200	8W-61-5
G300	8W-61-3, 4, 7, 8
G301	8W-61-2, 6
G400	8W-61-6
Junction Block	8W-61-2, 3, 4, 5, 6, 7, 8
Left Rear Sliding Door Contact	8W-61-3, 4, 7, 8
Left Rear Sliding Door Lock Motor	8W-61-4, 8
Liftgate Arm/Disarm Switch	8W-61-6
Liftgate Lock Motor	8W-61-3, 4, 7, 8
Memory Seat/Mirror Module	8W-61-5
Passenger Door Arm/Disarm Switch	8W-61-6
Passenger Door Lock Motor	8W-61-3, 4, 7, 8
Passenger Door Lock Switch	8W-61-2, 6
Passenger Power Window Switch	8W-61-2, 6
Power Distribution Center	8W-61-5
PTC 3 (JB)	8W-61-3, 4, 7, 8
Remote Keyless Entry Module	8W-61-5
Right Rear Sliding Door Contact	8W-61-3, 4, 7, 8
Right Rear Sliding Door Lock Motor	8W-61-4, 8

STANDARD

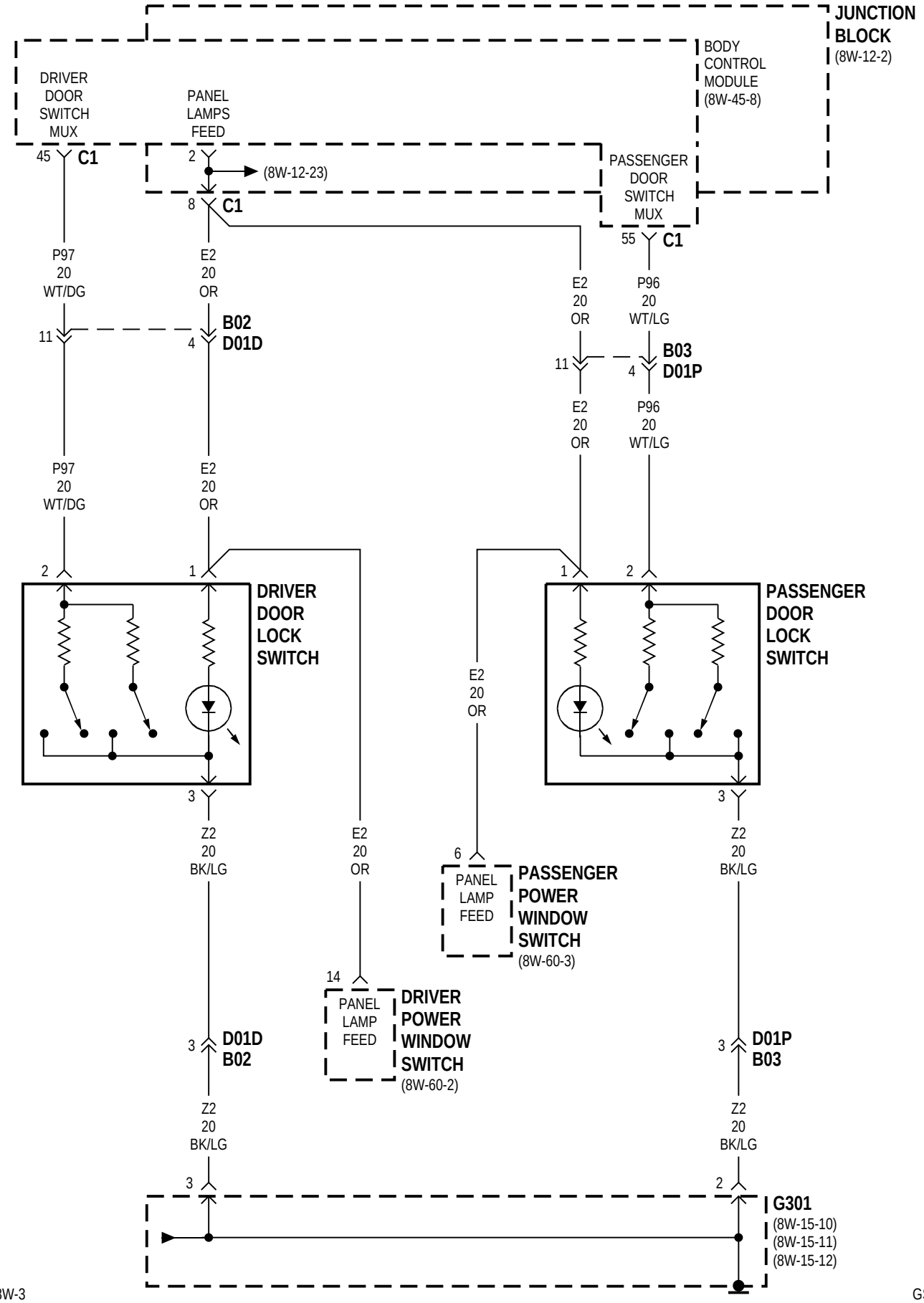
JUNCTION BLOCK
(8W-12-2)
BODY CONTROL MODULE
(8W-45-8)
DRIVER DOOR SWITCH MUX
PANEL LAMPS FEED
PASSENGER DOOR SWITCH MUX
45 C1
2
(8W-12-23)
8 C1
55 C1
P97 20 WT/DG
E2 20 OR
E2 20 OR
P96 20 WT/LG
11
4 B02 D01D
11
4 B03 D01P
E2 20 OR
P96 20 WT/LG
P97 20 WT/DG
E2 20 OR
2
1
1
2
DRIVER DOOR LOCK SWITCH
PASSENGER DOOR LOCK SWITCH
E2 20 OR
3
3
Z2 20 BK/LG
E2 20 OR
6
Z2 20 BK/LG
PANEL LAMP FEED
PASSENGER POWER WINDOW SWITCH
(8W-60-3)
14
PANEL LAMP FEED
DRIVER POWER WINDOW SWITCH
(8W-60-2)
3 D01D B02
3 D01P B03
Z2 20 BK/LG
Z2 20 BK/LG
3
2
G301
(8W-15-10)
(8W-15-11)
(8W-15-12)

STANDARD

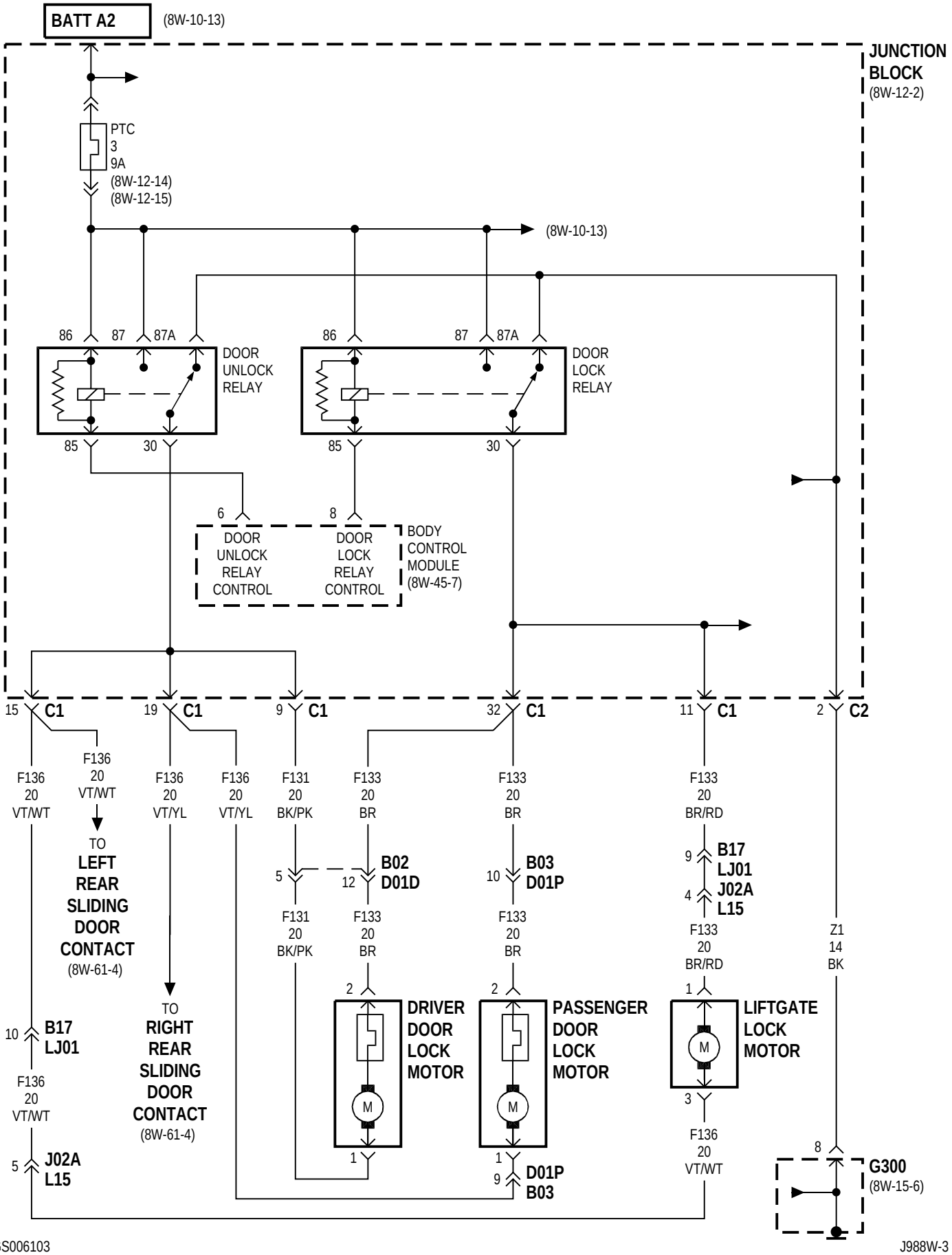
BATT A2
(8W-10-13)
JUNCTION BLOCK
(8W-12-2)
PTC
3
9A
(8W-12-14)
(8W-12-15)
(8W-10-13)
86
87
87A
DOOR UNLOCK RELAY
85
30
86
87
87A
DOOR LOCK RELAY
85
30
6
8
DOOR UNLOCK RELAY CONTROL
DOOR LOCK RELAY CONTROL
BODY CONTROL MODULE
(8W-45-7)
15 C1
19 C1
9 C1
32 C1
11 C1
2 C2
F136 20 VT/WT
F136 20 VT/WT
TO LEFT REAR SLIDING DOOR CONTACT
(8W-61-4)
F136 20 VT/YL
F136 20 VT/YL
F131 20 BK/PK
F133 20 BR
F133 20 BR
F133 20 BR/RD
10 B17 LJ01
F136 20 VT/WT
5 J02A L15
TO RIGHT REAR SLIDING DOOR CONTACT
(8W-61-4)
5
12 B02 D01D
F131 20 BK/PK
F133 20 BR
2
DRIVER DOOR LOCK MOTOR
M
1
10 B03 D01P
F133 20 BR
2
PASSENGER DOOR LOCK MOTOR
M
1
9 D01P B03
9 B17 LJU1 J02A L15
4
F133 20 BR/RD
1
LIFTGATE LOCK MOTOR
M
3
F136 20 VT/WT
Z1 14 BK
8
G300
(8W-15-6)

STANDARD

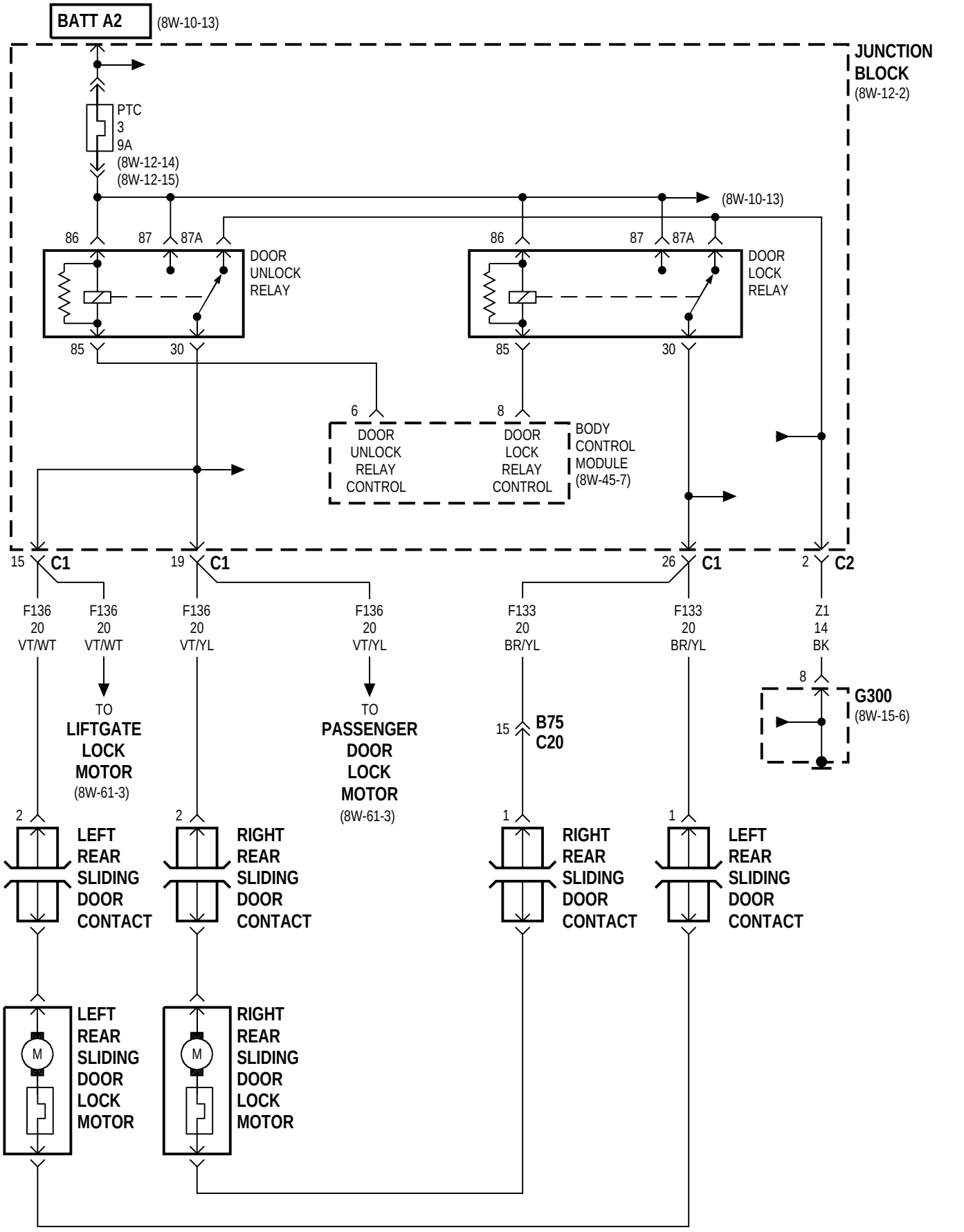
BATT A2
(8W-10-13)
JUNCTION BLOCK
(8W-12-2)
PTC
3
9A
(8W-12-14)
(8W-12-15)
(8W-10-13)
86
87
87A
DOOR UNLOCK RELAY
85
30
DOOR LOCK RELAY
6
8
DOOR UNLOCK RELAY CONTROL
DOOR LOCK RELAY CONTROL
BODY CONTROL MODULE
(8W-45-7)
15 C1
19 C1
26 C1
2 C2
F136 20 VT/WT
F136 20 VT/WT
F136 20 VT/YL
F136 20 VT/YL
F133 20 BR/YL
F133 20 BR/YL
Z1 14 BK
8
G300
(8W-15-6)
TO LIFTGATE LOCK MOTOR
(8W-61-3)
TO PASSENGER DOOR LOCK MOTOR
(8W-61-3)
15
B75
C20
2
1
LEFT REAR SLIDING DOOR CONTACT
RIGHT REAR SLIDING DOOR CONTACT
RIGHT REAR SLIDING DOOR CONTACT
LEFT REAR SLIDING DOOR CONTACT
M
LEFT REAR SLIDING DOOR LOCK MOTOR
RIGHT REAR SLIDING DOOR LOCK MOTOR

RKE

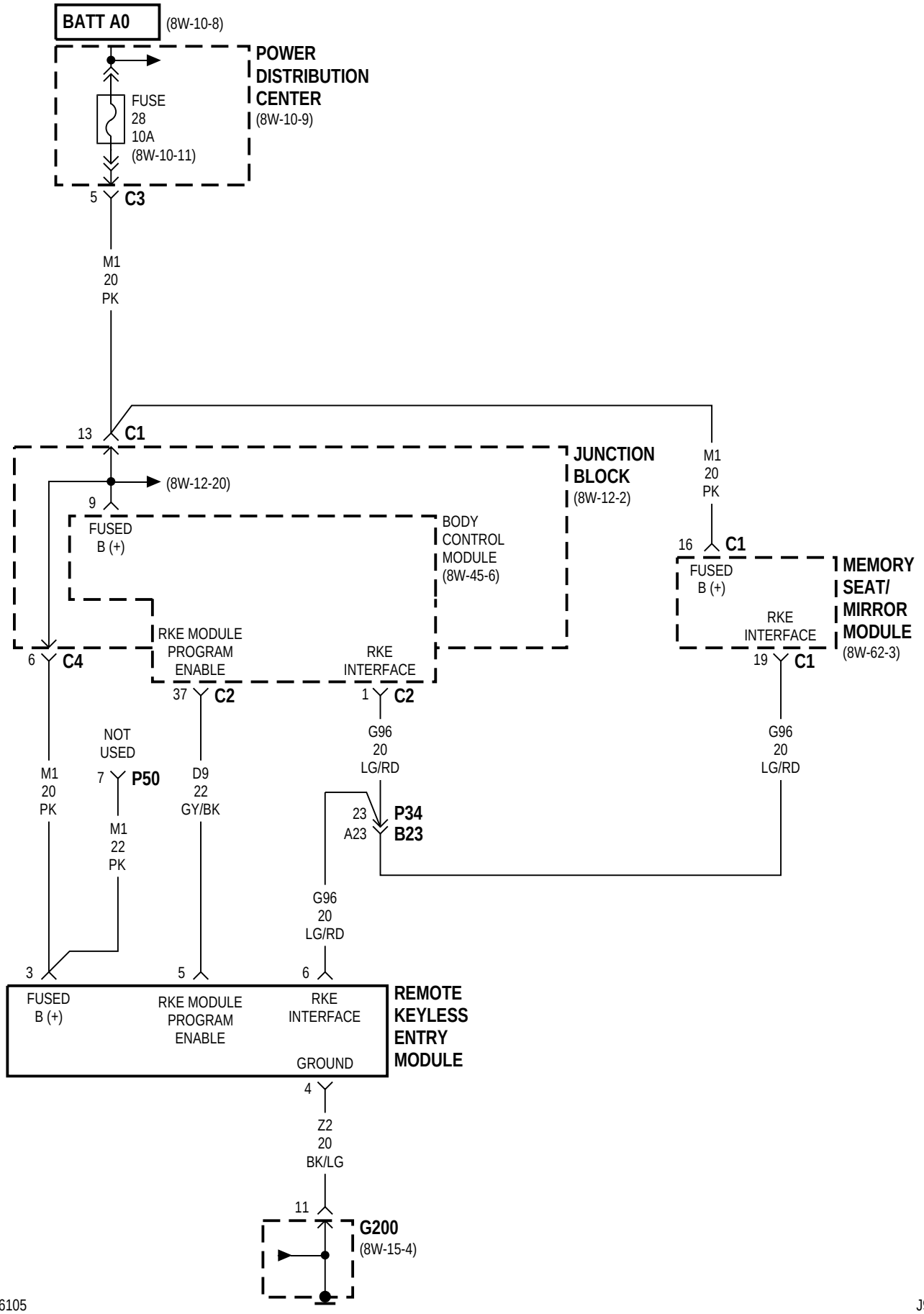
BATT A0
(8W-10-8)
POWER DISTRIBUTION CENTER
(8W-10-9)
FUSE 28 10A
(8W-10-11)
5 C3
M1 20 PK
13 C1
JUNCTION BLOCK
(8W-12-2)
(8W-12-20)
9
FUSED B (+)
BODY CONTROL MODULE
(8W-45-6)
RKE MODULE PROGRAM ENABLE
37 C2
RKE INTERFACE
1 C2
6 C4
M1 20 PK
NOT USED
7 P50
M1 22 PK
D9 22 GY/BK
G96 20 LG/RD
23 A23 P34 B23
M1 20 PK
16 C1
FUSED B (+)
RKE INTERFACE
19 C1
MEMORY SEAT/ MIRROR MODULE
(8W-62-3)
G96 20 LG/RD
G96 20 LG/RD
3
5
6
FUSED B (+)
RKE MODULE PROGRAM ENABLE
RKE INTERFACE
GROUND
REMOTE KEYLESS ENTRY MODULE
4
Z2 20 BK/LG
11
G200
(8W-15-4)

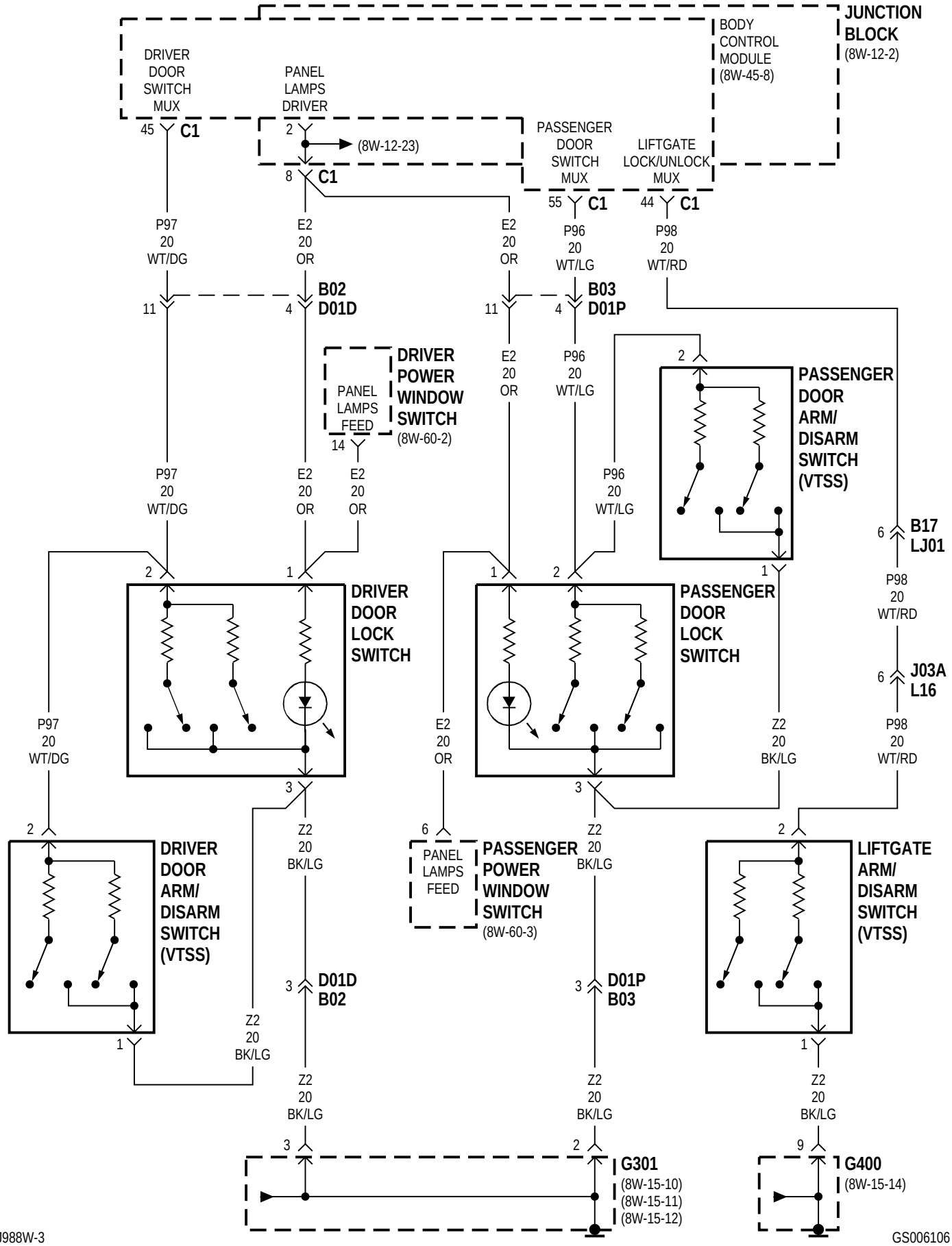
JUNCTION BLOCK
(8W-12-2)
BODY CONTROL MODULE
(8W-45-8)
DRIVER DOOR SWITCH MUX
PANEL LAMPS DRIVER
PASSENGER DOOR SWITCH MUX
LIFTGATE LOCK/UNLOCK MUX
45 C1
2
(8W-12-23)
8 C1
55 C1
44 C1
P97 20 WT/DG
E2 20 OR
E2 20 OR
P96 20 WT/LG
P98 20 WT/RD
11
4 B02 D01D
11
4 B03 D01P
DRIVER POWER WINDOW SWITCH
(8W-60-2)
PANEL LAMPS FEED
14
E2 20 OR
P96 20 WT/LG
2
PASSENGER DOOR ARM/ DISARM SWITCH (VTSS)
1
6 B17 LJ01
P98 20 WT/RD
6 J03A L16
P97 20 WT/DG
E2 20 OR
E2 20 OR
P96 20 WT/LG
2
1
DRIVER DOOR LOCK SWITCH
1
2
PASSENGER DOOR LOCK SWITCH
3
3
P97 20 WT/DG
E2 20 OR
Z2 20 BK/LG
P98 20 WT/RD
2
6
2
DRIVER DOOR ARM/ DISARM SWITCH (VTSS)
PANEL LAMPS FEED
PASSENGER POWER WINDOW SWITCH
(8W-60-3)
Z2 20 BK/LG
LIFTGATE ARM/ DISARM SWITCH (VTSS)
1
3 D01D B02
3 D01P B03
1
Z2 20 BK/LG
Z2 20 BK/LG
Z2 20 BK/LG
3
2
9
G301
(8W-15-10)
(8W-15-11)
(8W-15-12)
G400
(8W-15-14)

RKE

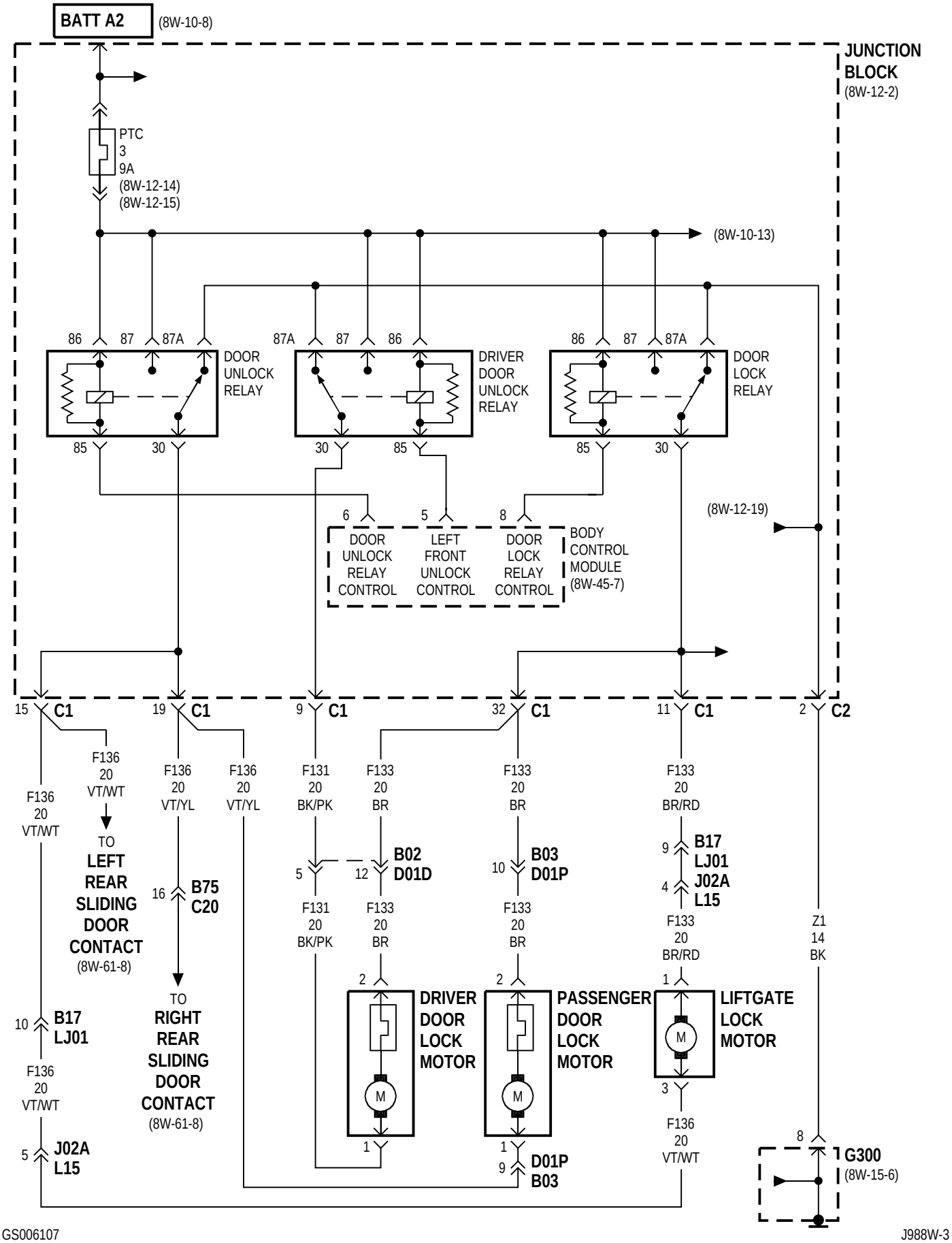
BATT A2
(8W-10-8)
JUNCTION BLOCK
(8W-12-2)
PTC
3
9A
(8W-12-14)
(8W-12-15)
(8W-10-13)
86 87 87A
DOOR UNLOCK RELAY
85 30
87A 87 86
DRIVER DOOR UNLOCK RELAY
30 85
86 87 87A
DOOR LOCK RELAY
85 30
(8W-12-19)
6 5 8
DOOR UNLOCK RELAY CONTROL
LEFT FRONT UNLOCK CONTROL
DOOR LOCK RELAY CONTROL
BODY CONTROL MODULE
(8W-45-7)
15 C1
19 C1
9 C1
32 C1
11 C1
2 C2
F136 20 VT/WT
F136 20 VT/WT
TO LEFT REAR SLIDING DOOR CONTACT
(8W-61-8)
F136 20 VT/YL
16 B75 C20
TO RIGHT REAR SLIDING DOOR CONTACT
(8W-61-8)
F136 20 VT/YL
F131 20 BK/PK
5
F131 20 BK/PK
F133 20 BR
12 B02 D01D
F133 20 BR
2
DRIVER DOOR LOCK MOTOR
1
F133 20 BR
10 B03 D01P
F133 20 BR
2
PASSENGER DOOR LOCK MOTOR
1
9 D01P B03
F133 20 BR/RD
9 B17 LJ01 J02A L15
4
F133 20 BR/RD
1
LIFTGATE LOCK MOTOR
3
F136 20 VT/WT
Z1 14 BK
8
G300
(8W-15-6)
10 B17 LJ01
F136 20 VT/WT
5 J02A L15

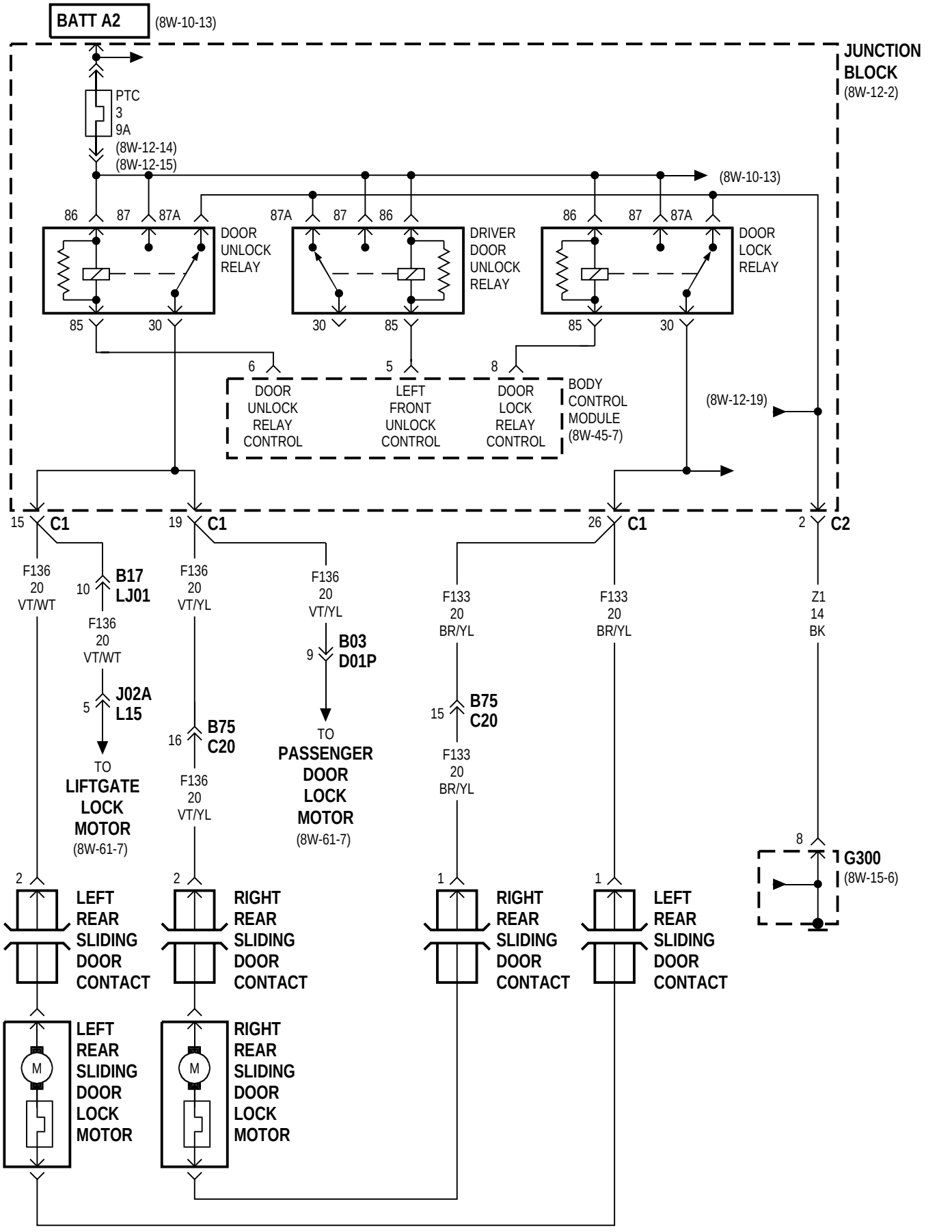
BATT A2
(8W-10-13)
JUNCTION BLOCK
(8W-12-2)
PTC
3
9A
(8W-12-14)
(8W-12-15)
(8W-10-13)
86
87
87A
DOOR UNLOCK RELAY
87A
87
86
DRIVER DOOR UNLOCK RELAY
86
87
87A
DOOR LOCK RELAY
85
30
30
85
85
30
6
5
8
DOOR UNLOCK RELAY CONTROL
LEFT FRONT UNLOCK CONTROL
DOOR LOCK RELAY CONTROL
BODY CONTROL MODULE
(8W-45-7)
(8W-12-19)
15 C1
19 C1
26 C1
2 C2
F136 20 VT/WT
10 B17 LJ01
F136 20 VT/WT
5 J02A L15
TO LIFTGATE LOCK MOTOR
(8W-61-7)
F136 20 VT/YL
16 B75 C20
F136 20 VT/YL
F136 20 VT/YL
9 B03 D01P
TO PASSENGER DOOR LOCK MOTOR
(8W-61-7)
F133 20 BR/YL
15 B75 C20
F133 20 BR/YL
F133 20 BR/YL
Z1 14 BK
8 G300
(8W-15-6)
2 LEFT REAR SLIDING DOOR CONTACT
2 RIGHT REAR SLIDING DOOR CONTACT
1 RIGHT REAR SLIDING DOOR CONTACT
1 LEFT REAR SLIDING DOOR CONTACT
M
LEFT REAR SLIDING DOOR LOCK MOTOR
M
RIGHT REAR SLIDING DOOR LOCK MOTOR

8W-62 POWER MIRRORS

Component	Page
Automatic Day/Night Mirror	8W-62-6
Body Control Module	8W-62-2, 3, 4, 5, 8
Driver Power Mirror	8W-62-2, 4, 6, 7, 8
DS01	8W-62-3
Fuse 18 (PDC)	8W-62-2, 4, 8
Fuse 28 (PDC)	8W-62-3
G300	8W-62-2, 3, 4, 5, 8
Junction Block	8W-62-2, 3, 4, 5, 8
Memory Power Seat Switch	8W-62-3
Memory Seat/Mirror Module	8W-62-3, 4, 5, 6, 7
Memory Set Switch	8W-62-3
Passenger Power Mirror	8W-62-2, 5, 8
Passenger Power Seat Switch	8W-62-3
Power Distribution Center	8W-62-2, 3, 4, 8
Power Folding Mirror Switch	8W-62-8
Power Mirror Fold Relay	8W-62-8
Power Mirror Switch	8W-62-2, 4, 5
Power Mirror Unfold Relay	8W-62-8
Power Seat Circuit Breaker	8W-62-3
Remote Keyless Entry Module	8W-62-3

STANDARD

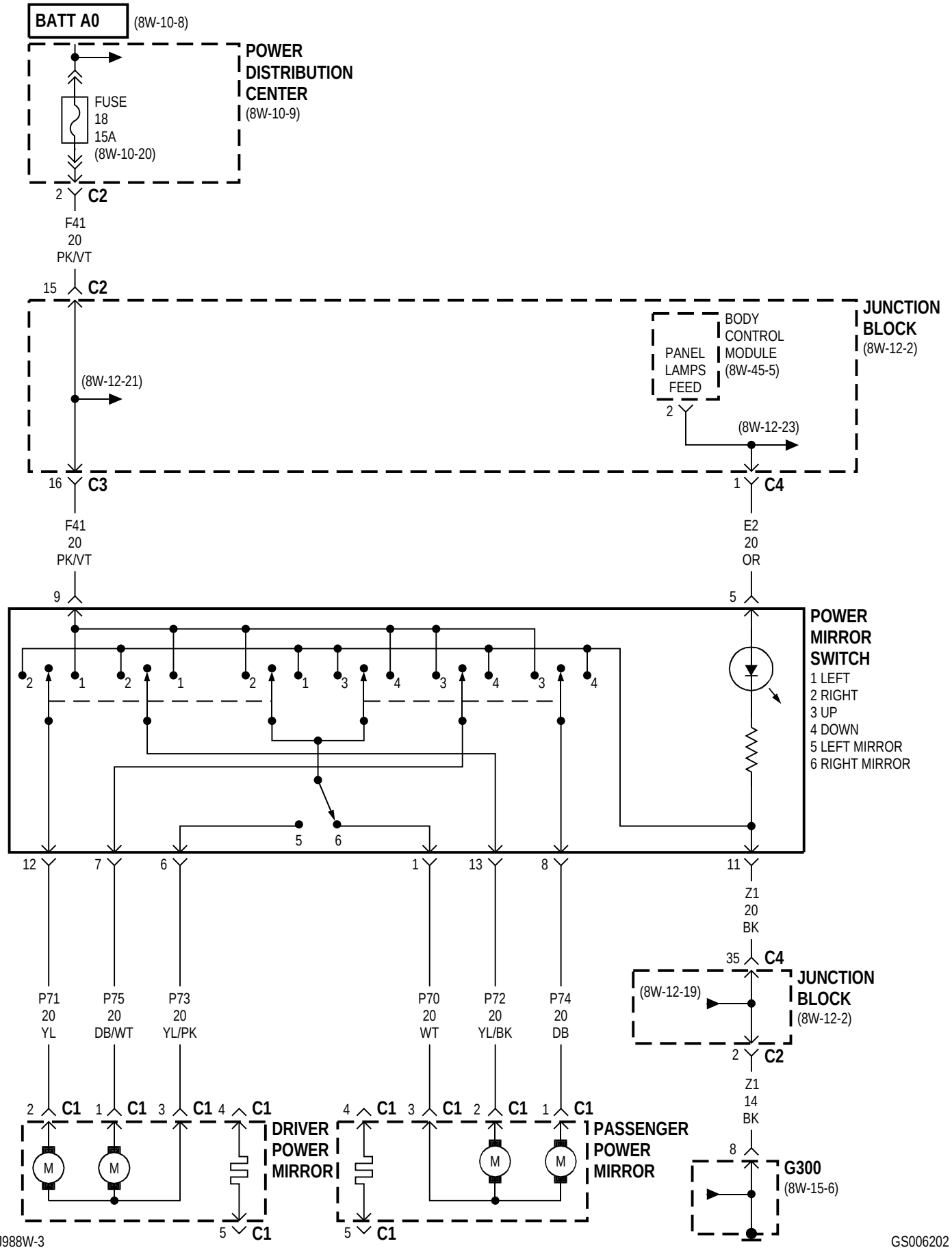

J988W-3

GS006202

MEMORY

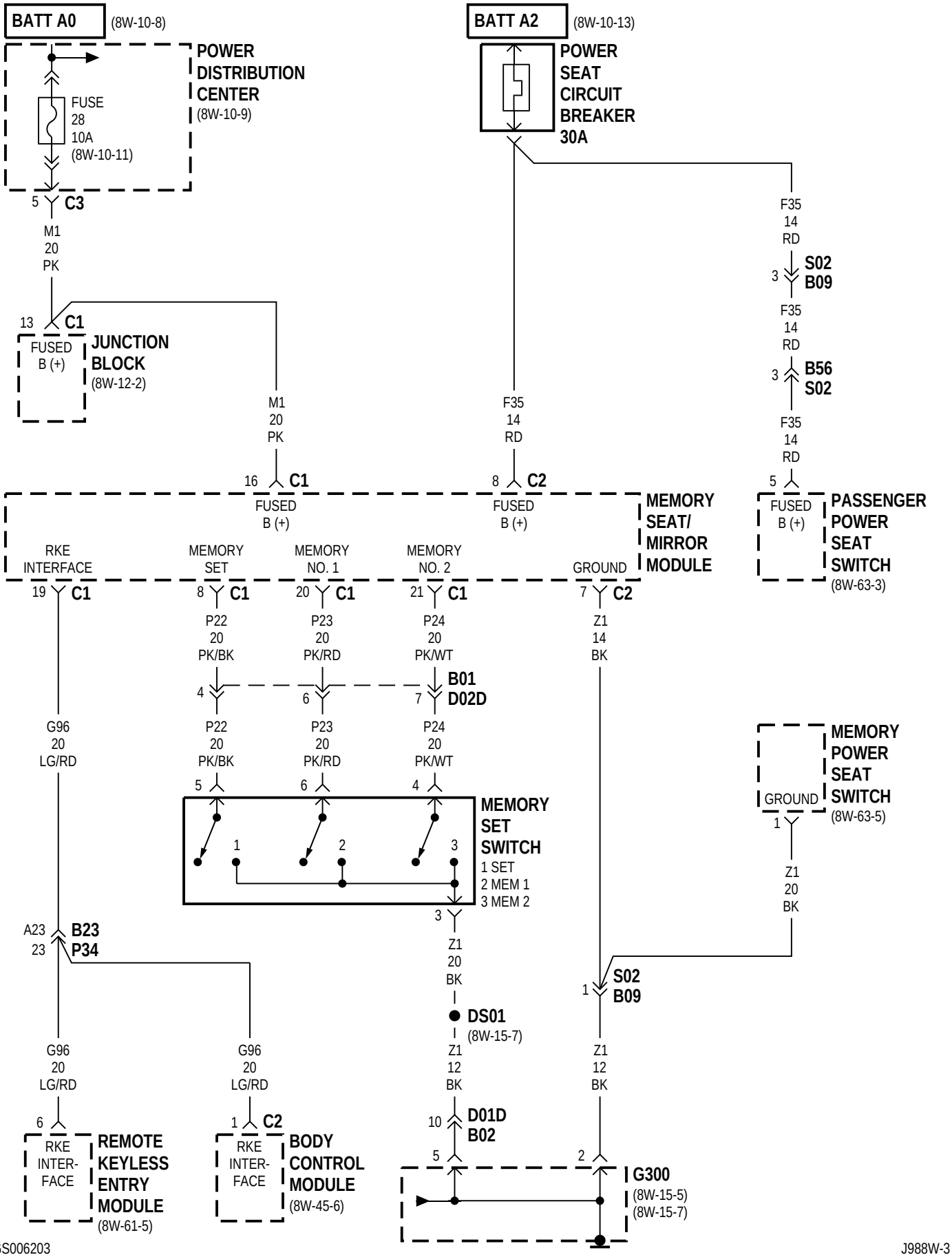
BATT A0
(8W-10-8)
POWER DISTRIBUTION CENTER
(8W-10-9)
FUSE 28 10A
(8W-10-11)
5 C3
M1 20 PK
13 C1
FUSED B (+)
JUNCTION BLOCK
(8W-12-2)
BATT A2
(8W-10-13)
POWER SEAT CIRCUIT BREAKER 30A
F35 14 RD
3 S02 B09
F35 14 RD
3 B56 S02
F35 14 RD
5
FUSED B (+)
PASSENGER POWER SEAT SWITCH
(8W-63-3)
M1 20 PK
16 C1
FUSED B (+)
F35 14 RD
8 C2
FUSED B (+)
MEMORY SEAT/ MIRROR MODULE
RKE INTERFACE
19 C1
MEMORY SET
8 C1
MEMORY NO. 1
20 C1
MEMORY NO. 2
21 C1
GROUND
7 C2
P22 20 PK/BK
P23 20 PK/RD
P24 20 PK/WT
B01 D02D
4
6
7
G96 20 LG/RD
P22 20 PK/BK
P23 20 PK/RD
P24 20 PK/WT
5
6
4
1
2
3
MEMORY SET SWITCH
1 SET
2 MEM 1
3 MEM 2
3
Z1 20 BK
MEMORY POWER SEAT SWITCH
(8W-63-5)
GROUND
1
Z1 20 BK
A23 23 B23 P34
S02 B09
1
DS01
(8W-15-7)
G96 20 LG/RD
G96 20 LG/RD
Z1 12 BK
Z1 12 BK
6
1 C2
10 D01D B02
5
2
RKE INTER-FACE
REMOTE KEYLESS ENTRY MODULE
(8W-61-5)
RKE INTER-FACE
BODY CONTROL MODULE
(8W-45-6)
G300
(8W-15-5)
(8W-15-7)

MEMORY

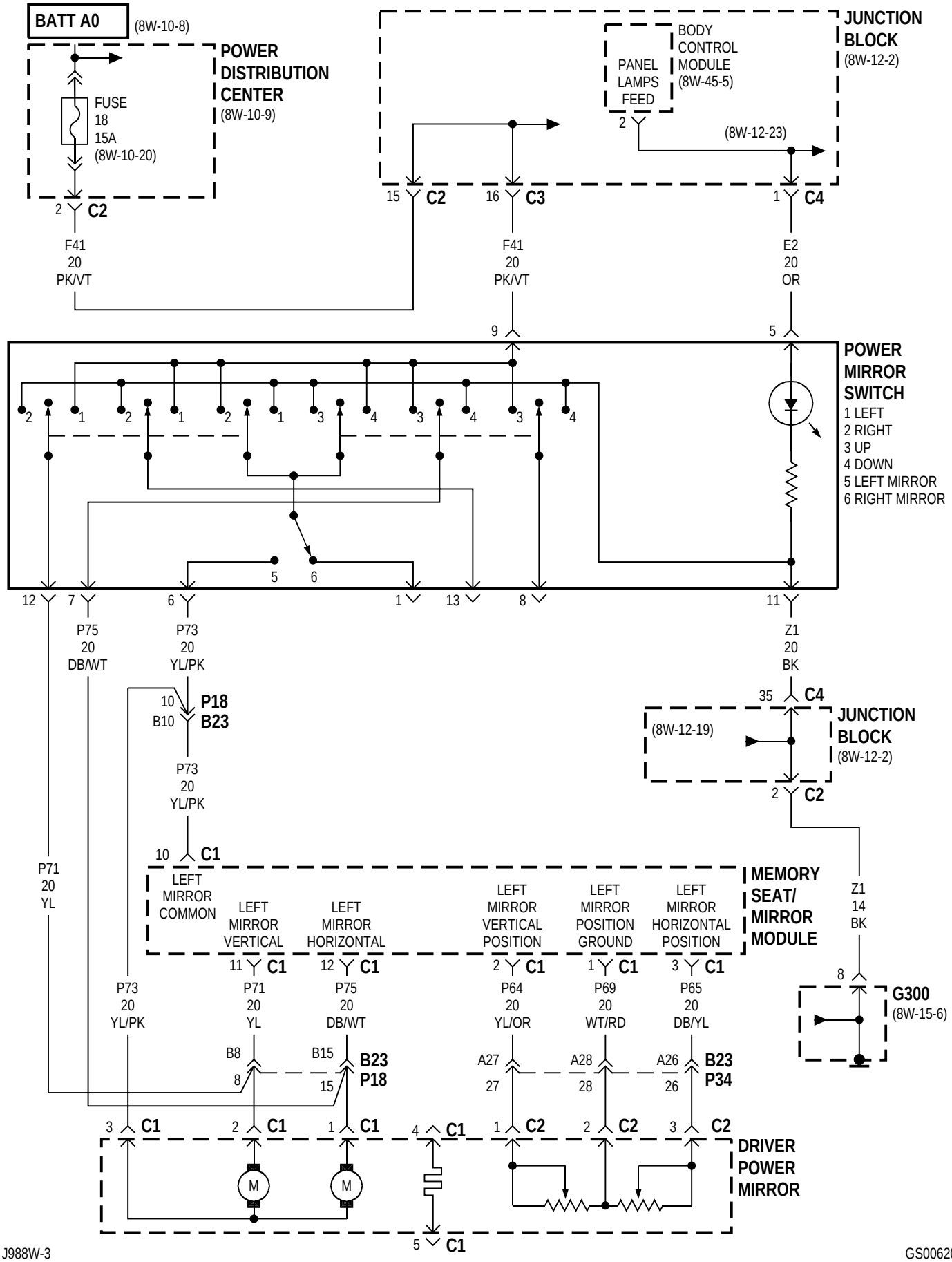
BATT A0
(8W-10-8)
POWER DISTRIBUTION CENTER
(8W-10-9)
FUSE 18 15A
(8W-10-20)
2 C2
F41 20 PK/VT
JUNCTION BLOCK
(8W-12-2)
BODY CONTROL MODULE
(8W-45-5)
PANEL LAMPS FEED
2
(8W-12-23)
15 C2
16 C3
1 C4
F41 20 PK/VT
E2 20 OR
9
5
POWER MIRROR SWITCH
1 LEFT
2 RIGHT
3 UP
4 DOWN
5 LEFT MIRROR
6 RIGHT MIRROR
12
7
6
1
13
8
11
P75 20 DB/WT
P73 20 YL/PK
Z1 20 BK
10 B10 P18 B23
P73 20 YL/PK
10 C1
35 C4
(8W-12-19)
JUNCTION BLOCK
(8W-12-2)
2 C2
P71 20 YL
LEFT MIRROR COMMON
LEFT MIRROR VERTICAL
LEFT MIRROR HORIZONTAL
LEFT MIRROR VERTICAL POSITION
LEFT MIRROR POSITION GROUND
LEFT MIRROR HORIZONTAL POSITION
MEMORY SEAT/ MIRROR MODULE
Z1 14 BK
11 C1
12 C1
2 C1
1 C1
3 C1
8
G300
(8W-15-6)
P73 20 YL/PK
P71 20 YL
P75 20 DB/WT
P64 20 YL/OR
P69 20 WT/RD
P65 20 DB/YL
B8
8
B15
15
B23 P18
A27
27
A28
28
A26
26
B23 P34
3 C1
2 C1
1 C1
4 C1
1 C2
2 C2
3 C2
M
M
DRIVER POWER MIRROR
5 C1

MEMORY

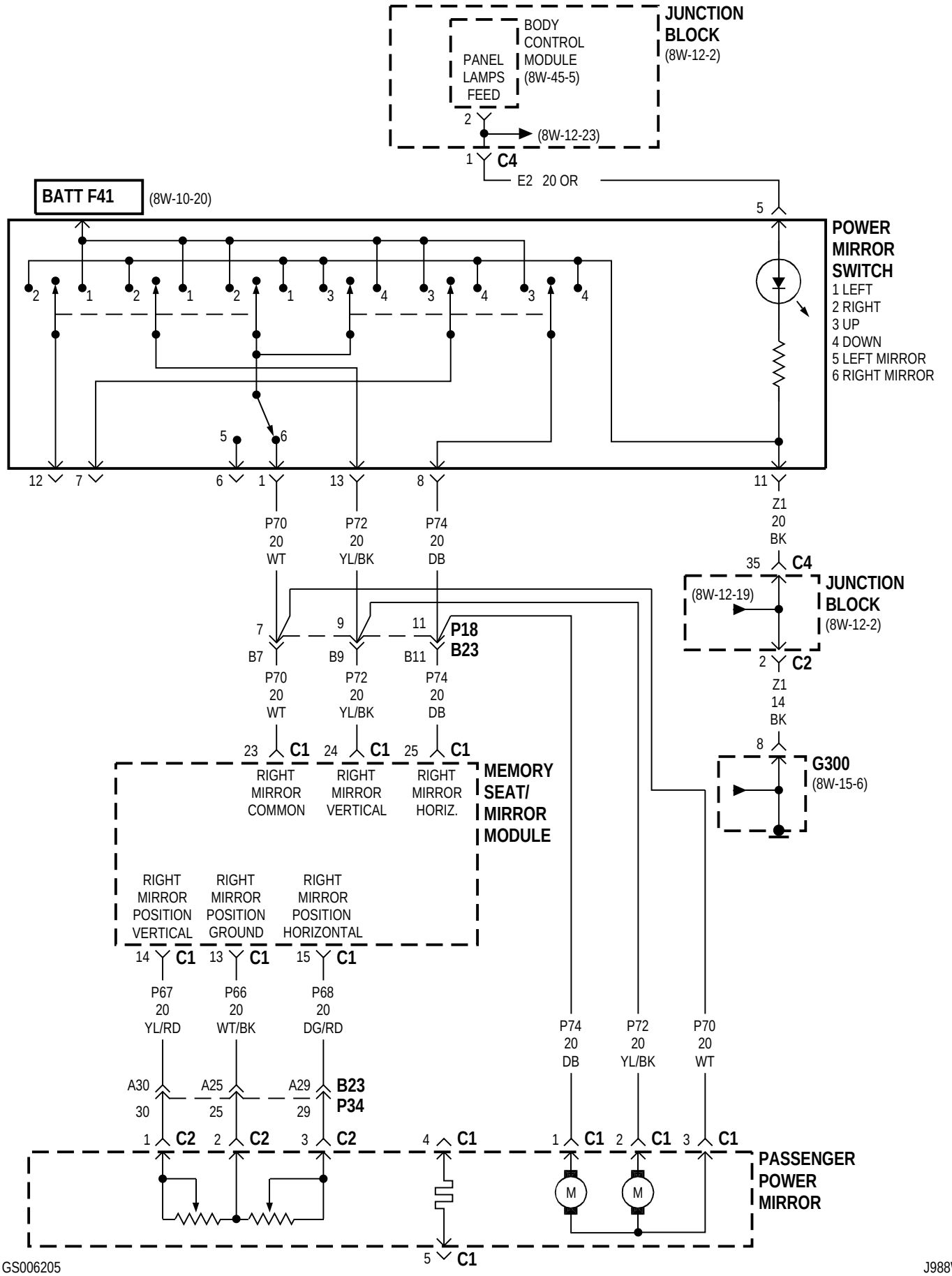
JUNCTION BLOCK (8W-12-2)
BODY CONTROL MODULE (8W-45-5)
PANEL LAMPS FEED
2
(8W-12-23)
1 C4
E2 20 OR
BATT F41 (8W-10-20)
5
POWER MIRROR SWITCH
1 LEFT
2 RIGHT
3 UP
4 DOWN
5 LEFT MIRROR
6 RIGHT MIRROR
12 7 6 1 13 8 11
P70 20 WT
P72 20 YL/BK
P74 20 DB
Z1 20 BK
35 C4
JUNCTION BLOCK (8W-12-2)
(8W-12-19)
2 C2
Z1 14 BK
8
G300 (8W-15-6)
7 9 11 P18 B23
B7 B9 B11
P70 20 WT
P72 20 YL/BK
P74 20 DB
23 C1 24 C1 25 C1
RIGHT MIRROR COMMON
RIGHT MIRROR VERTICAL
RIGHT MIRROR HORIZ.
MEMORY SEAT/ MIRROR MODULE
RIGHT MIRROR POSITION VERTICAL
RIGHT MIRROR POSITION GROUND
RIGHT MIRROR POSITION HORIZONTAL
14 C1 13 C1 15 C1
P67 20 YL/RD
P66 20 WT/BK
P68 20 DG/RD
A30 A25 A29 B23 P34
30 25 29
1 C2 2 C2 3 C2
4 C1
1 C1 2 C1 3 C1
P74 20 DB
P72 20 YL/BK
P70 20 WT
M M
PASSENGER POWER MIRROR
5 C1

MEMORY/EXCEPT BUILT-UP-EXPORT

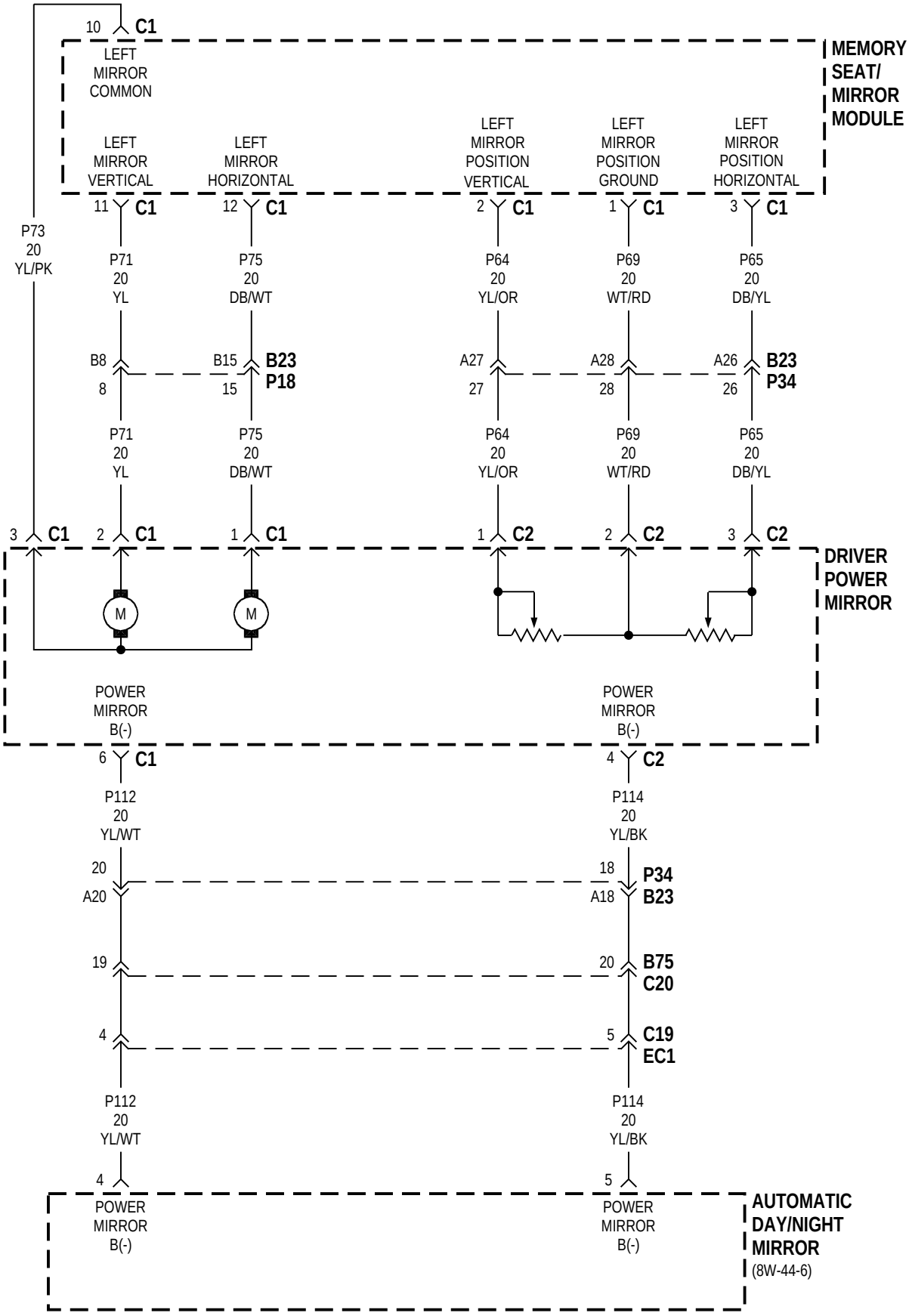

MEMORY/BUILT-UP-EXPORT

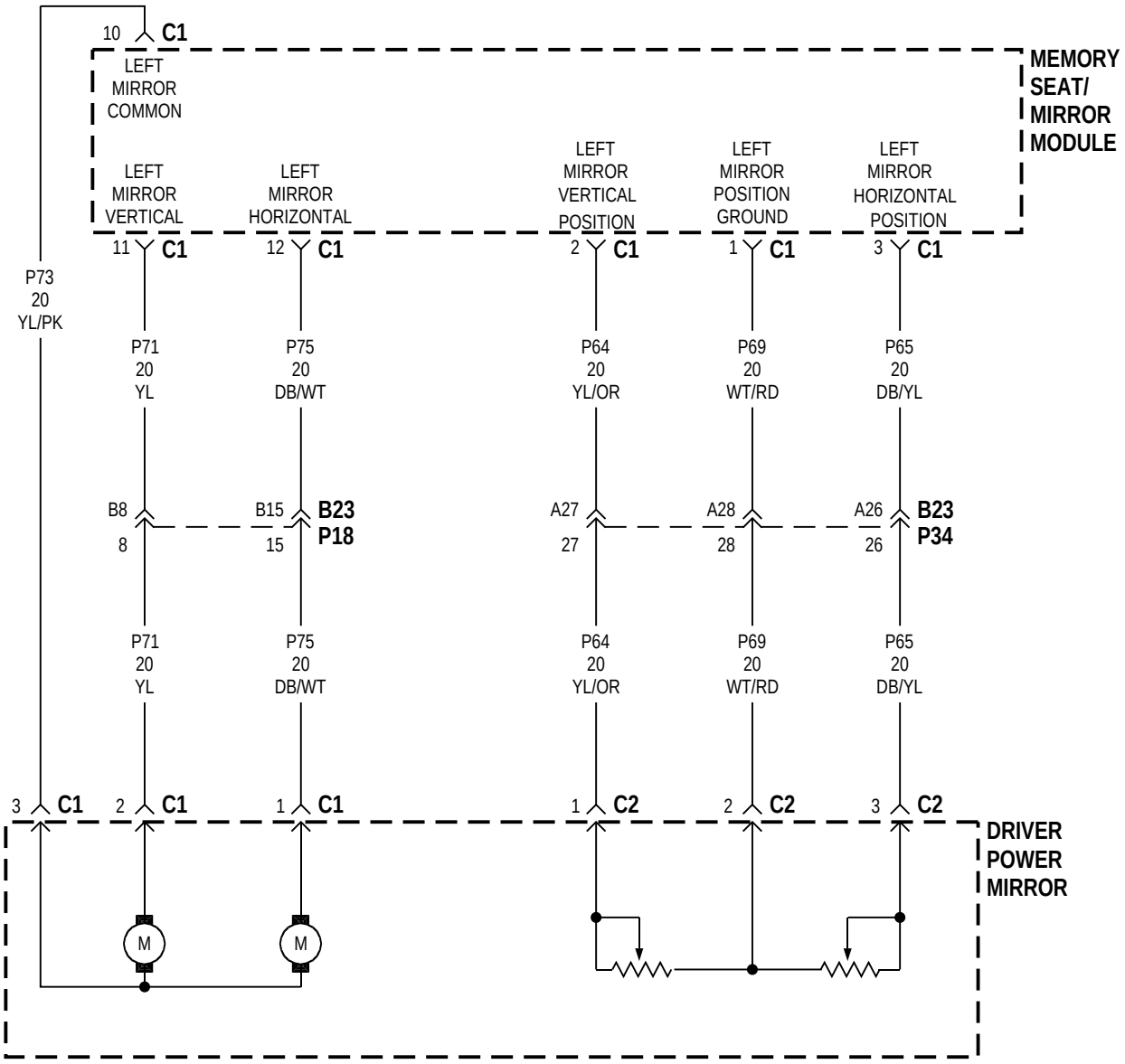

BUILT-UP-EXPORT

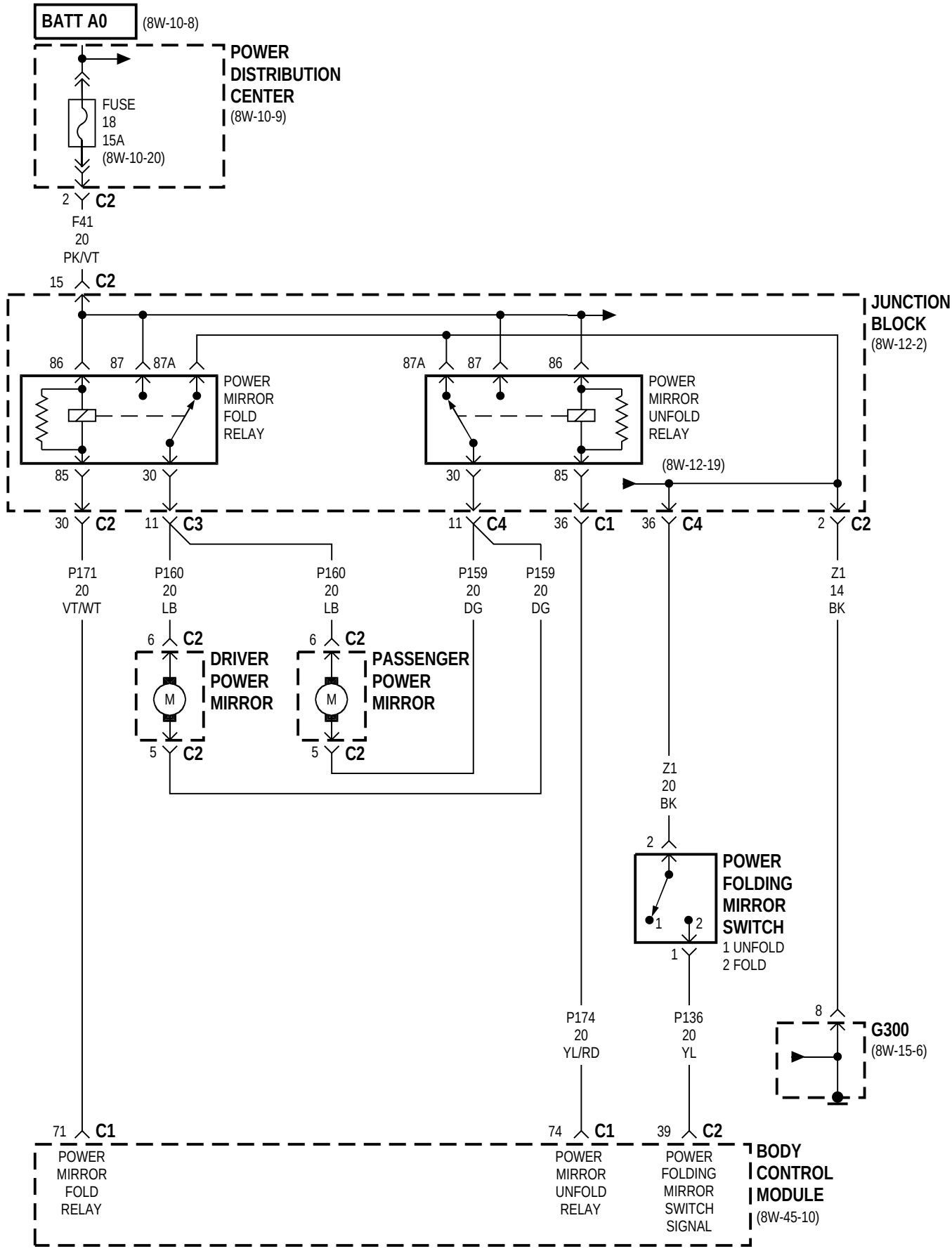

8W-63 POWER SEAT

Component	Page
Body Control Module	8W-63-4
Driver Heated Seat Back	8W-63-7
Driver Heated Seat Cushion	8W-63-7
Driver Heated Seat Module	8W-63-7
Driver Heated Seat Switch	8W-63-7
Driver Power Seat Switch	8W-63-2
Driver Seat Front Vertical Motor	8W-63-2
Driver Seat Horizontal Motor	8W-63-2
Driver Seat Rear Vertical Motor	8W-63-2
Driver Seat Recliner Motor	8W-63-2
DS01	8W-63-4
Fuse 12 (JB)	8W-63-7, 8
Fuse 28 (PDC)	8W-63-4
Fusible Link	8W-63-2, 3
G300	8W-63-2, 3, 4, 5, 7, 8
HS1	8W-63-7
HS2	8W-63-7
HS3	8W-63-8
HS4	8W-63-8
HS5D B09	8W-63-2, 7
HS5P B56	8W-63-3, 8
Junction Block	8W-63-4, 7, 8
Memory Power Seat Switch	8W-63-4, 5, 7
Memory Seat Front Vertical Motor	8W-63-5
Memory Seat Front Vertical Position Sensor	8W-63-6
Memory Seat Horizontal Motor	8W-63-5
Memory Seat Horizontal Position Sensor	8W-63-6
Memory Seat Rear Vertical Motor	8W-63-5
Memory Seat Rear Vertical Position Sensor	8W-63-6
Memory Seat Recline Position Sensor	8W-63-6
Memory Seat Recliner Motor	8W-63-5
Memory Seat/Mirror Module	8W-63-2, 3, 4, 5, 6, 7
Memory Set Switch	8W-63-4
Passenger Heated Seat Back	8W-63-8
Passenger Heated Seat Cushion	8W-63-8
Passenger Heated Seat Module	8W-63-8
Passenger Heated Seat Switch	8W-63-8
Passenger Power Seat Switch	8W-63-3
Passenger Seat Front Vertical Motor	8W-63-3
Passenger Seat Horizontal Motor	8W-63-3
Passenger Seat Rear Vertical Motor	8W-63-3
Passenger Seat Recliner Motor	8W-63-3
Power Distribution Center	8W-63-4
Power Seat Circuit Breaker	8W-63-2, 3, 4
Remote Keyless Entry Module	8W-63-4
SS01	8W-63-6
SS02	8W-63-6

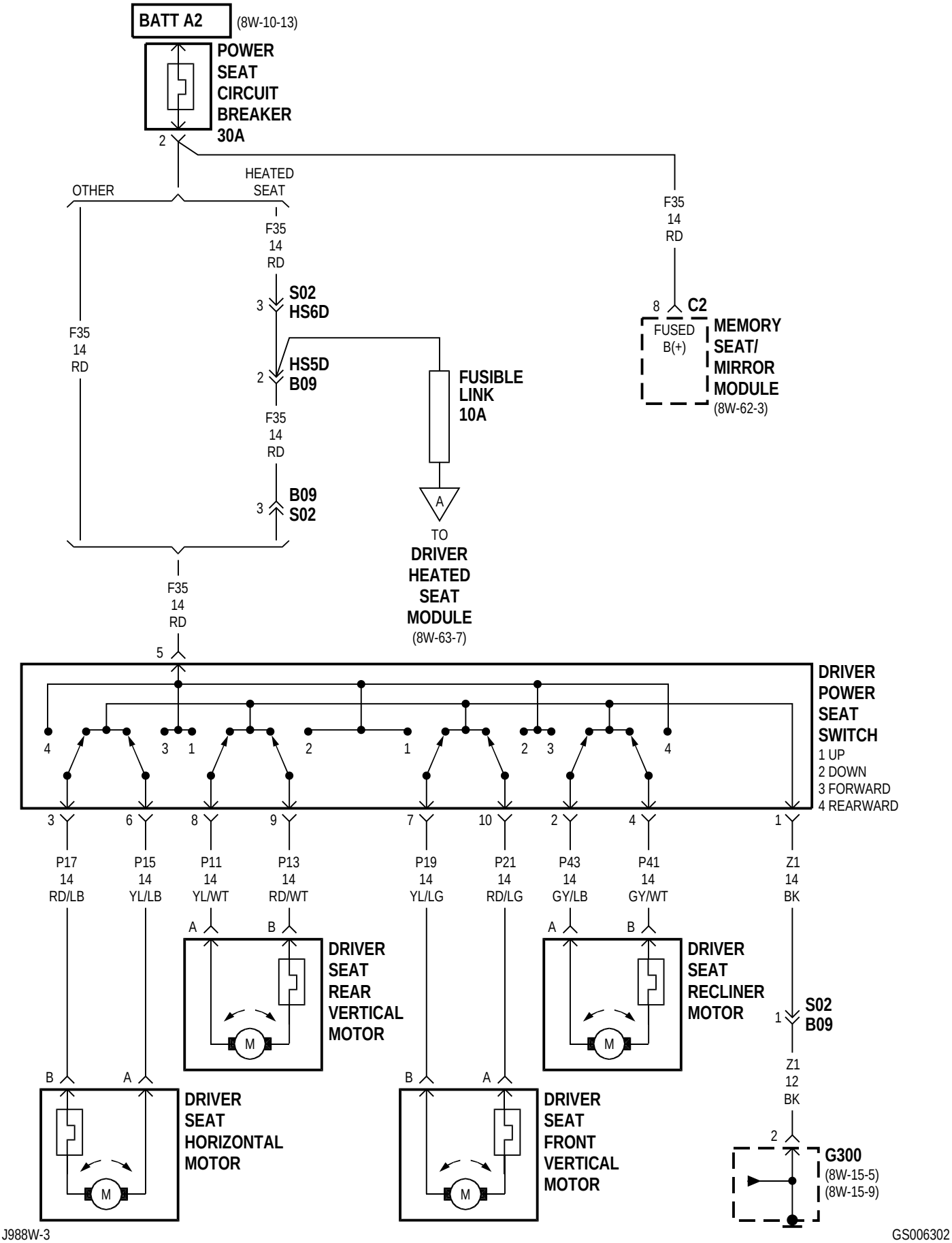

J988W-3

GS006302

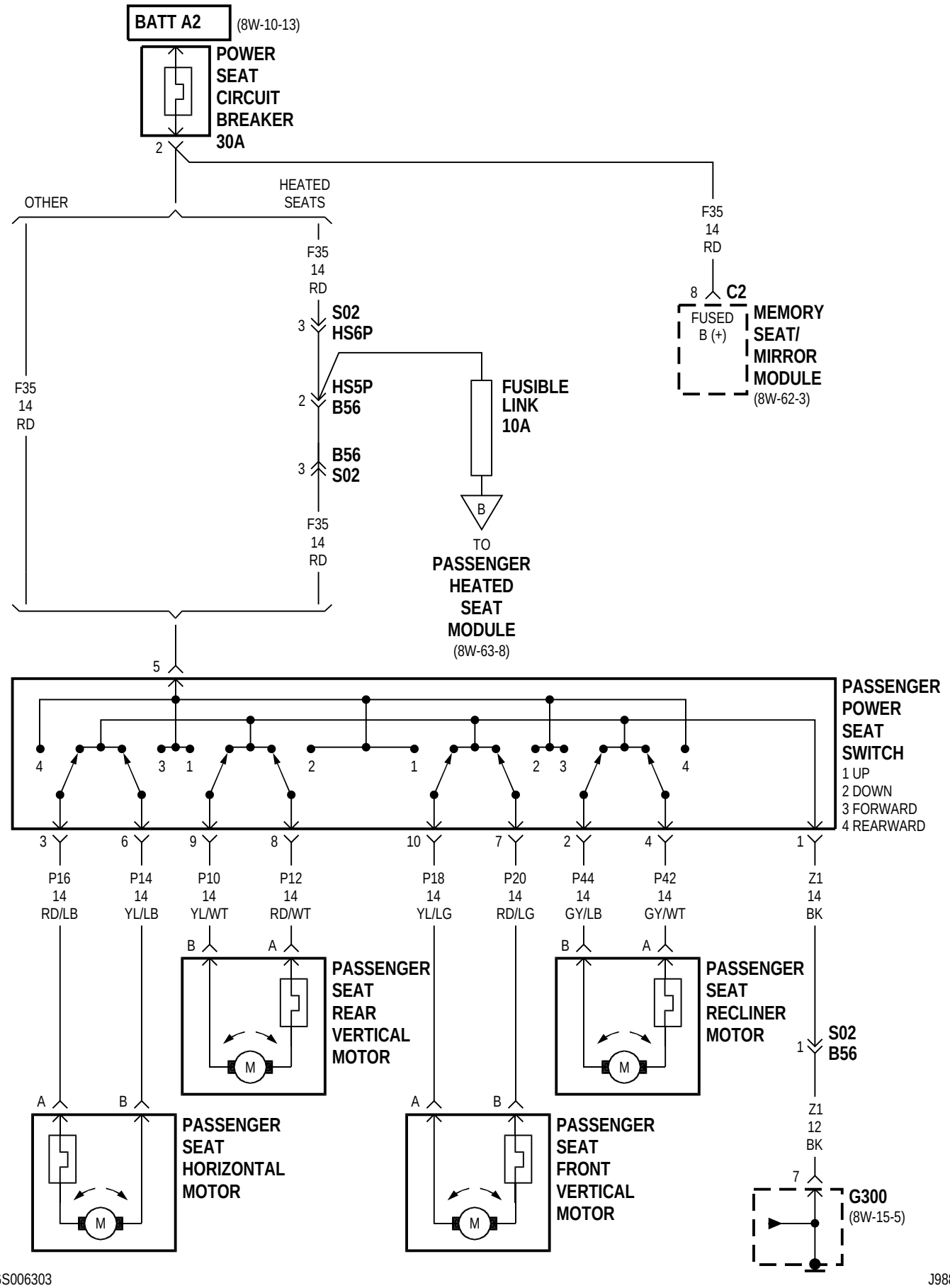
BATT A2
(8W-10-13)
POWER SEAT CIRCUIT BREAKER 30A
2
OTHER
HEATED SEATS
F35 14 RD
3
S02 HS6P
2
HS5P B56
3
B56 S02
F35 14 RD
F35 14 RD
FUSIBLE LINK 10A
B
TO PASSENGER HEATED SEAT MODULE
(8W-63-8)
F35 14 RD
8
C2
FUSED B (+)
MEMORY SEAT/ MIRROR MODULE
(8W-62-3)
5
PASSENGER POWER SEAT SWITCH
1 UP
2 DOWN
3 FORWARD
4 REARWARD
3
6
9
8
10
7
2
4
1
P16 14 RD/LB
P14 14 YL/LB
P10 14 YL/WT
P12 14 RD/WT
P18 14 YL/LG
P20 14 RD/LG
P44 14 GY/LB
P42 14 GY/WT
Z1 14 BK
B
A
PASSENGER SEAT REAR VERTICAL MOTOR
M
B
A
PASSENGER SEAT RECLINER MOTOR
M
1
S02 B56
Z1 12 BK
7
G300
(8W-15-5)
A
B
PASSENGER SEAT HORIZONTAL MOTOR
M
A
B
PASSENGER SEAT FRONT VERTICAL MOTOR
M

MEMORY

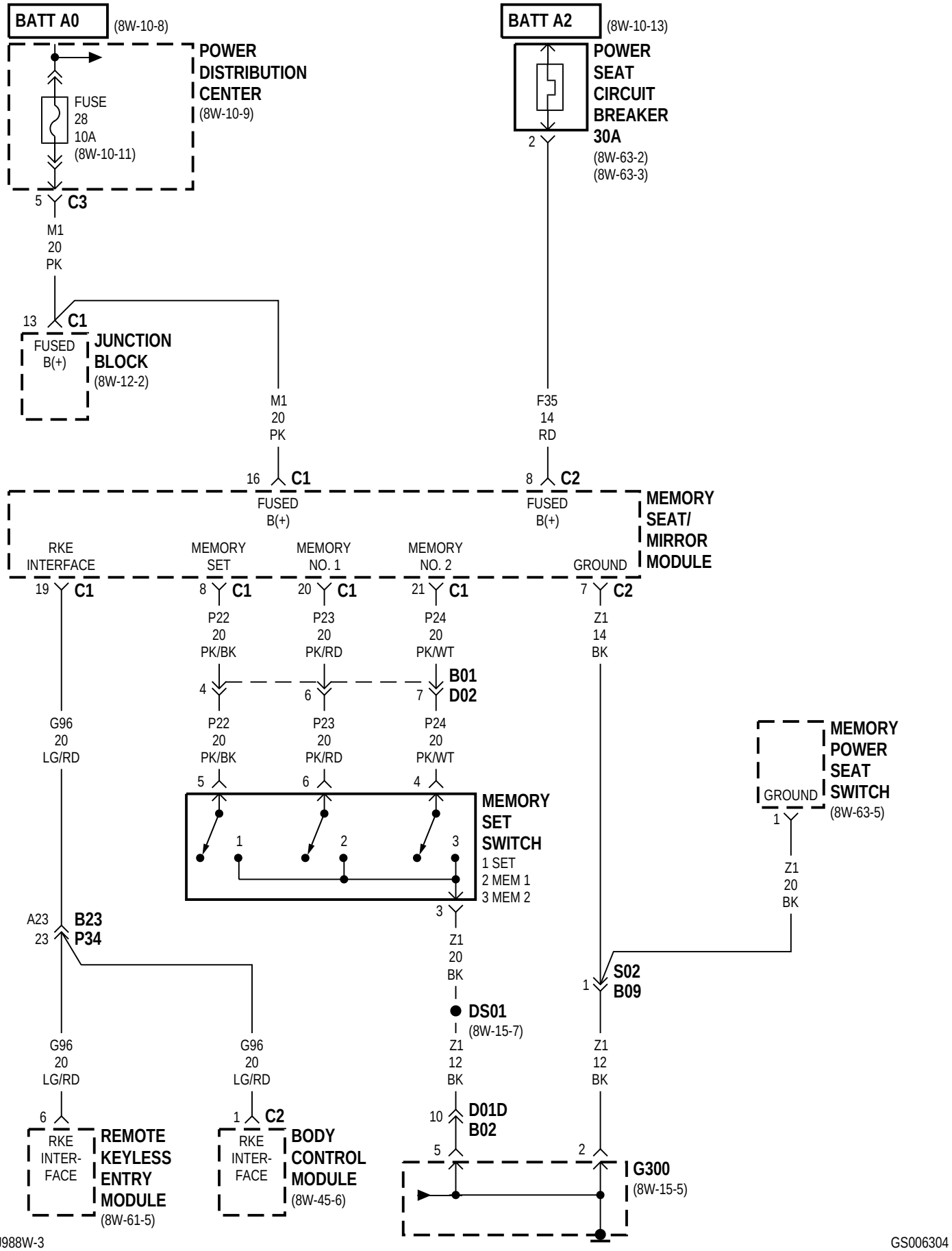
BATT A0
(8W-10-8)
POWER DISTRIBUTION CENTER
(8W-10-9)
FUSE 28 10A
(8W-10-11)
5 C3
M1 20 PK
13 C1
FUSED B(+)
JUNCTION BLOCK
(8W-12-2)
BATT A2
(8W-10-13)
POWER SEAT CIRCUIT BREAKER 30A
(8W-63-2)
(8W-63-3)
2
F35 14 RD
8 C2
FUSED B(+)
M1 20 PK
16 C1
FUSED B(+)
MEMORY SEAT/ MIRROR MODULE
RKE INTERFACE
MEMORY SET
MEMORY NO. 1
MEMORY NO. 2
GROUND
19 C1
8 C1
20 C1
21 C1
7 C2
P22 20 PK/BK
P23 20 PK/RD
P24 20 PK/WT
Z1 14 BK
B01
D02
4
6
7
G96 20 LG/RD
P22 20 PK/BK
P23 20 PK/RD
P24 20 PK/WT
5
6
4
MEMORY SET SWITCH
1 SET
2 MEM 1
3 MEM 2
1
2
3
3
MEMORY POWER SEAT SWITCH
(8W-63-5)
GROUND
1
Z1 20 BK
A23 23 B23 P34
Z1 20 BK
S02
B09
1
DS01
(8W-15-7)
G96 20 LG/RD
G96 20 LG/RD
Z1 12 BK
Z1 12 BK
6
1 C2
10
D01D
B02
5
2
G300
(8W-15-5)
RKE INTER-FACE
REMOTE KEYLESS ENTRY MODULE
(8W-61-5)
RKE INTER-FACE
BODY CONTROL MODULE
(8W-45-6)

MEMORY

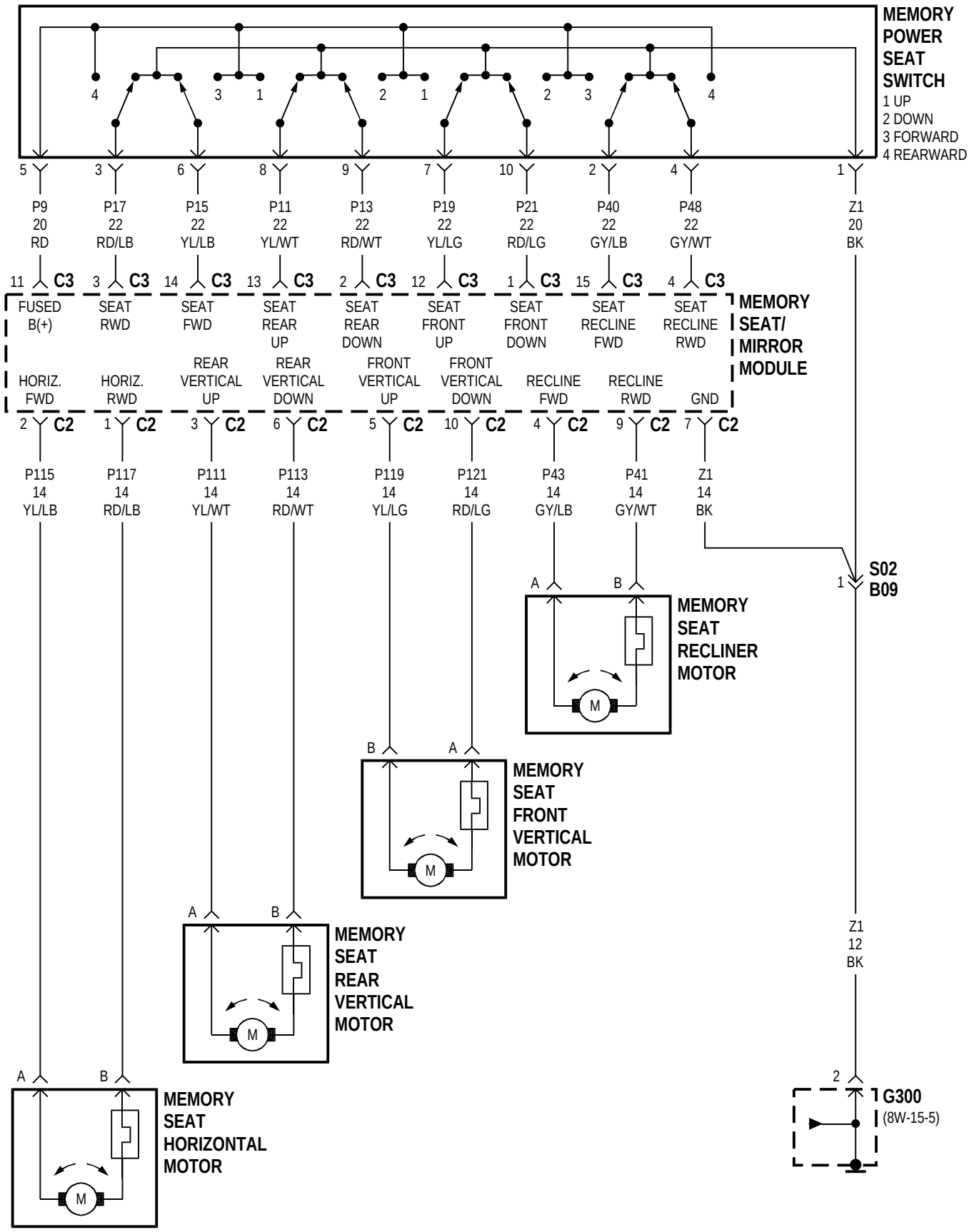
MEMORY POWER SEAT SWITCH
1 UP
2 DOWN
3 FORWARD
4 REARWARD
4 3 1 2 1 2 3 4
5 3 6 8 9 7 10 2 4 1
P9 20 RD
P17 22 RD/LB
P15 22 YL/LB
P11 22 YL/WT
P13 22 RD/WT
P19 22 YL/LG
P21 22 RD/LG
P40 22 GY/LB
P48 22 GY/WT
Z1 20 BK
11 C3 FUSED B(+)
3 C3 SEAT RWD
14 C3 SEAT FWD
13 C3 SEAT REAR UP
2 C3 SEAT REAR DOWN
12 C3 SEAT FRONT UP
1 C3 SEAT FRONT DOWN
15 C3 SEAT RECLINE FWD
4 C3 SEAT RECLINE RWD
MEMORY SEAT/ MIRROR MODULE
HORIZ. FWD
HORIZ. RWD
REAR VERTICAL UP
REAR VERTICAL DOWN
FRONT VERTICAL UP
FRONT VERTICAL DOWN
RECLINE FWD
RECLINE RWD
GND
2 C2 1 C2 3 C2 6 C2 5 C2 10 C2 4 C2 9 C2 7 C2
P115 14 YL/LB
P117 14 RD/LB
P111 14 YL/WT
P113 14 RD/WT
P119 14 YL/LG
P121 14 RD/LG
P43 14 GY/LB
P41 14 GY/WT
Z1 14 BK
S02 B09
A B MEMORY SEAT RECLINER MOTOR
B A MEMORY SEAT FRONT VERTICAL MOTOR
A B MEMORY SEAT REAR VERTICAL MOTOR
A B MEMORY SEAT HORIZONTAL MOTOR
M
Z1 12 BK
2 G300 (8W-15-5)

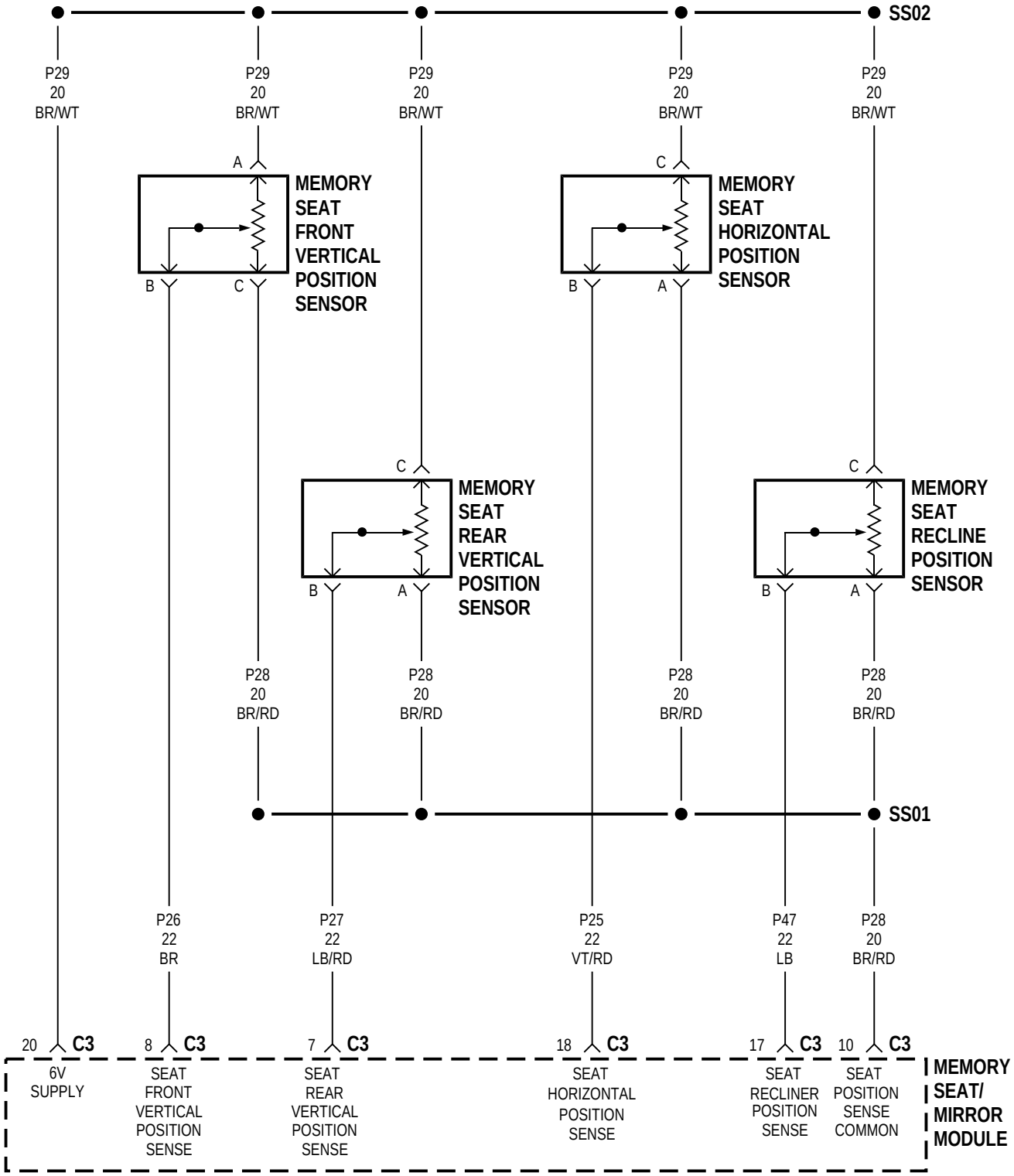
SS02
P29
20
BR/WT
A
B
C
MEMORY
SEAT
FRONT
VERTICAL
POSITION
SENSOR
MEMORY
SEAT
HORIZONTAL
POSITION
SENSOR
MEMORY
SEAT
REAR
VERTICAL
POSITION
SENSOR
MEMORY
SEAT
RECLINE
POSITION
SENSOR
P28
20
BR/RD
SS01
P26
22
BR
P27
22
LB/RD
P25
22
VT/RD
P47
22
LB
20 C3
8 C3
7 C3
18 C3
17 C3
10 C3
6V
SUPPLY
SEAT
FRONT
VERTICAL
POSITION
SENSE
SEAT
REAR
VERTICAL
POSITION
SENSE
SEAT
HORIZONTAL
POSITION
SENSE
SEAT
RECLINER
POSITION
SENSE
SEAT
POSITION
SENSE
COMMON
MEMORY
SEAT/
MIRROR
MODULE

HEATED

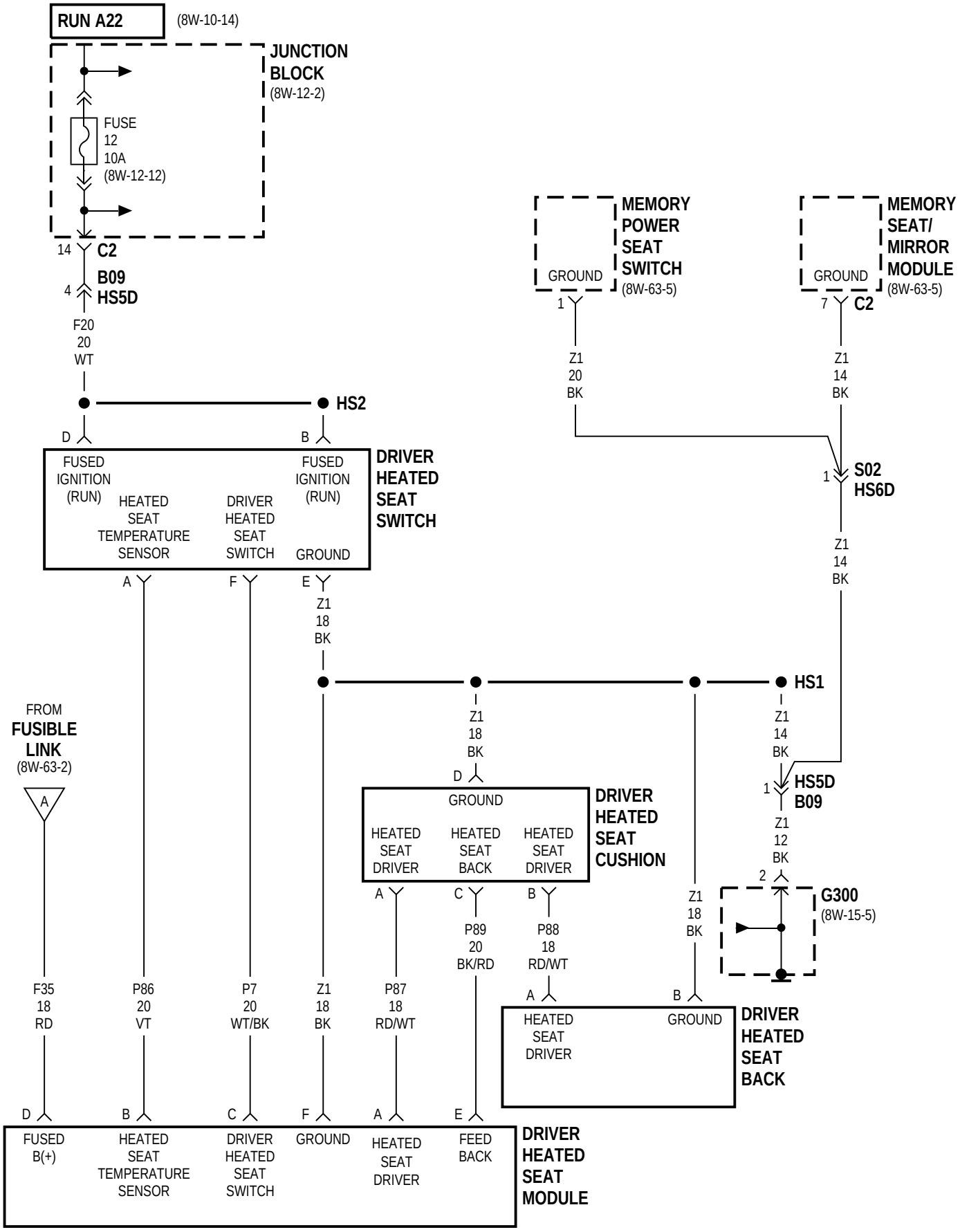
RUN A22
(8W-10-14)
JUNCTION BLOCK
(8W-12-2)
FUSE 12 10A
(8W-12-12)
14 C2
4 B09 HS5D
F20 20 WT
HS2
D
B
FUSED IGNITION (RUN)
HEATED SEAT TEMPERATURE SENSOR
DRIVER HEATED SEAT SWITCH
FUSED IGNITION (RUN)
GROUND
DRIVER HEATED SEAT SWITCH
A
F
E
Z1 18 BK
MEMORY POWER SEAT SWITCH
(8W-63-5)
GROUND
1
Z1 20 BK
MEMORY SEAT/ MIRROR MODULE
(8W-63-5)
GROUND
7 C2
Z1 14 BK
1 S02 HS6D
Z1 14 BK
HS1
Z1 18 BK
D
Z1 14 BK
1 HS5D B09
Z1 12 BK
2
G300
(8W-15-5)
GROUND
HEATED SEAT DRIVER
HEATED SEAT BACK
HEATED SEAT DRIVER
DRIVER HEATED SEAT CUSHION
A
C
B
P89 20 BK/RD
P88 18 RD/WT
Z1 18 BK
B
A
HEATED SEAT DRIVER
GROUND
DRIVER HEATED SEAT BACK
FROM FUSIBLE LINK
(8W-63-2)
A
F35 18 RD
P86 20 VT
P7 20 WT/BK
Z1 18 BK
P87 18 RD/WT
D
B
C
F
A
E
FUSED B(+)
HEATED SEAT TEMPERATURE SENSOR
DRIVER HEATED SEAT SWITCH
GROUND
HEATED SEAT DRIVER
FEED BACK
DRIVER HEATED SEAT MODULE

HEATED

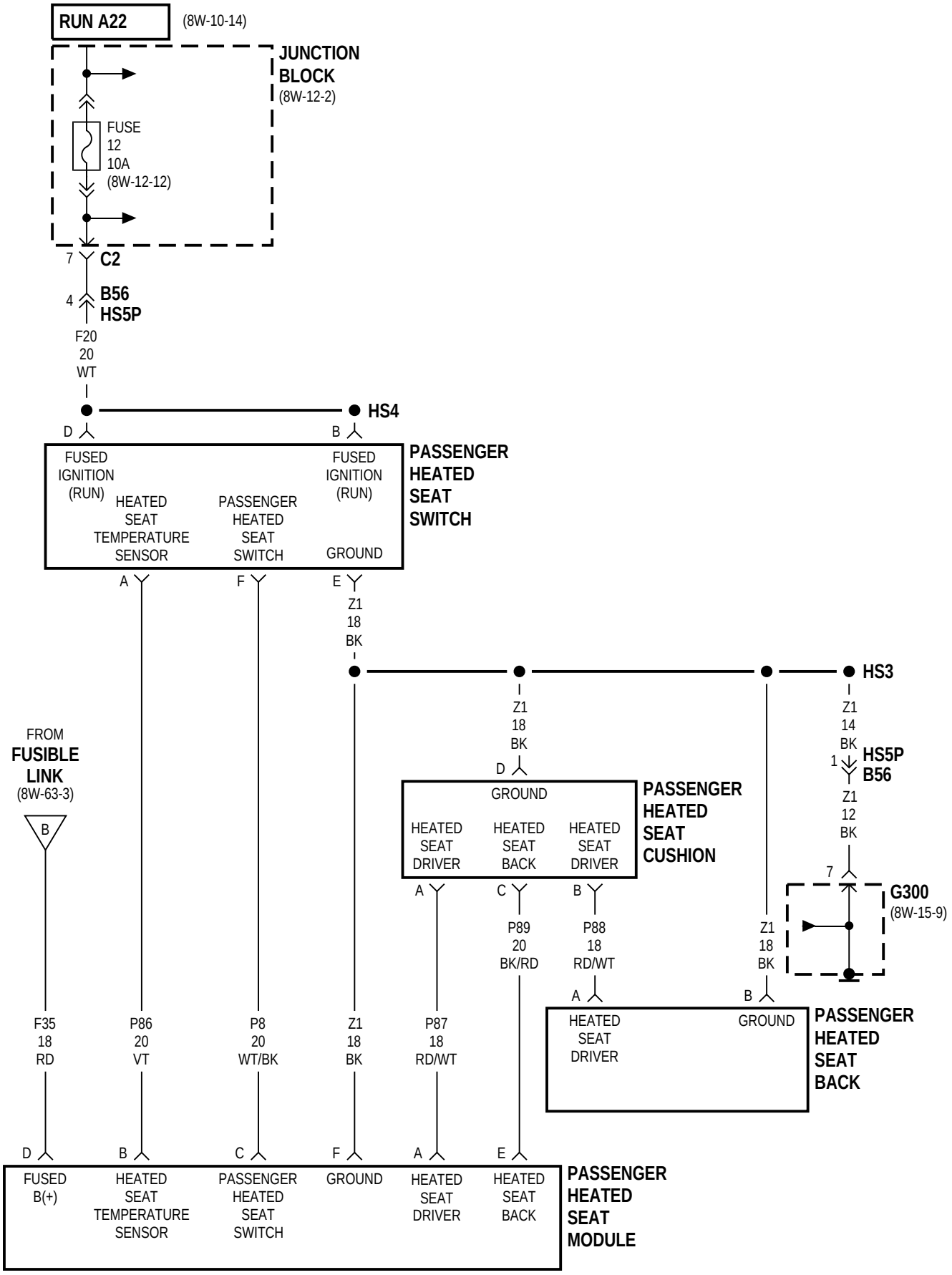
RUN A22
(8W-10-14)
JUNCTION BLOCK
(8W-12-2)
FUSE 12 10A
(8W-12-12)
7
C2
4
B56
HS5P
F20 20 WT
HS4
D
B
FUSED IGNITION (RUN)
HEATED SEAT TEMPERATURE SENSOR
PASSENGER HEATED SEAT SWITCH
FUSED IGNITION (RUN)
GROUND
PASSENGER HEATED SEAT SWITCH
A
F
E
Z1 18 BK
HS3
Z1 14 BK
1
HS5P
B56
Z1 12 BK
7
G300
(8W-15-9)
FROM FUSIBLE LINK
(8W-63-3)
B
Z1 18 BK
D
GROUND
HEATED SEAT DRIVER
HEATED SEAT BACK
HEATED SEAT DRIVER
PASSENGER HEATED SEAT CUSHION
A
C
B
P89 20 BK/RD
P88 18 RD/WT
Z1 18 BK
A
B
HEATED SEAT DRIVER
GROUND
PASSENGER HEATED SEAT BACK
F35 18 RD
P86 20 VT
P8 20 WT/BK
Z1 18 BK
P87 18 RD/WT
D
B
C
F
A
E
FUSED B(+)
HEATED SEAT TEMPERATURE SENSOR
PASSENGER HEATED SEAT SWITCH
GROUND
HEATED SEAT DRIVER
HEATED SEAT BACK
PASSENGER HEATED SEAT MODULE

8W-70 SPLICE INFORMATION

Component	Page
AWS1	8W-15-13
AWS2	8W-31-3
BS01	8W-70-2
BS02	8W-70-2
BS03	8W-47-4
BS05	8W-30-4, 31
BS06	8W-30-4, 31
BS08	8W-15-5
BS10	8W-45-8
BS15	8W-50-6
BS16	8W-50-8
BS17	8W-70-3
BS19	8W-41-2
BS30	8W-30-36
BS31	8W-15-3
BS32	8W-30-33
BS33	8W-10-25
BS40	8W-15-3
BS41	8W-15-3
CS01	8W-10-21
CS02	8W-10-20
CS03	8W-70-3
CS04	8W-12-9
CS06	8W-15-11, 12
CS1	8W-10-21
DS01	8W-15-5
ES01 (DIESEL)	8W-15-3
ES01 (GAS)	8W-10-28
ES02 (DIESEL)	8W-15-3
ES02 (GAS)	8W-70-4, 5, 6
ES03	8W-70-7
ES05	8W-70-8
ES06	8W-10-25
ES07 (DIESEL)	8W-42-10
ES07 (GAS)	8W-12-13
ES08	8W-30-25
ES08	8W-70-8
ES09 (DIESEL)	8W-42-10
ES09 (GAS)	8W-20-2
ES10	8W-70-8
ES11	8W-15-2
ES12 (DIESEL)	8W-15-3
ES12 (GAS)	8W-10-23
ES13	8W-30-4
ES13	8W-40-5
ES14	8W-30-4
ES17 (2.0L/2.4L)	8W-70-9
ES17 (3.3L/3.8L)	8W-30-22
ES18	8W-15-2
ES21	8W-70-4, 5, 6
ES23	8W-15-2
ES24	8W-30-3
ES26	8W-20-3
ES28	8W-20-3
ES29	8W-10-25
ES30	8W-15-3
ES31	8W-15-3
ES37	8W-30-32
ES40	8W-10-27
ES99 (2.0L)	8W-10-24
FS01 (2.4L)	8W-70-5
FS01 (3.3L/3.8L)	8W-10-24
FS02 (2.4L)	8W-70-7
FS02 (3.3L/3.8L)	8W-70-6
FS03	8W-10-23
HS1	8W-63-7
HS2	8W-63-7
HS3	8W-63-8
HS4	8W-63-8
JS01B	8W-70-10
JS02B	8W-70-10
JS03	8W-70-9
PS01	8W-30-4, 31
PS02	8W-30-4, 31
RFS1	8W-42-8
RFS2	8W-15-2
RFS2	8W-42-8
SS01	8W-63-6
SS02	8W-63-6

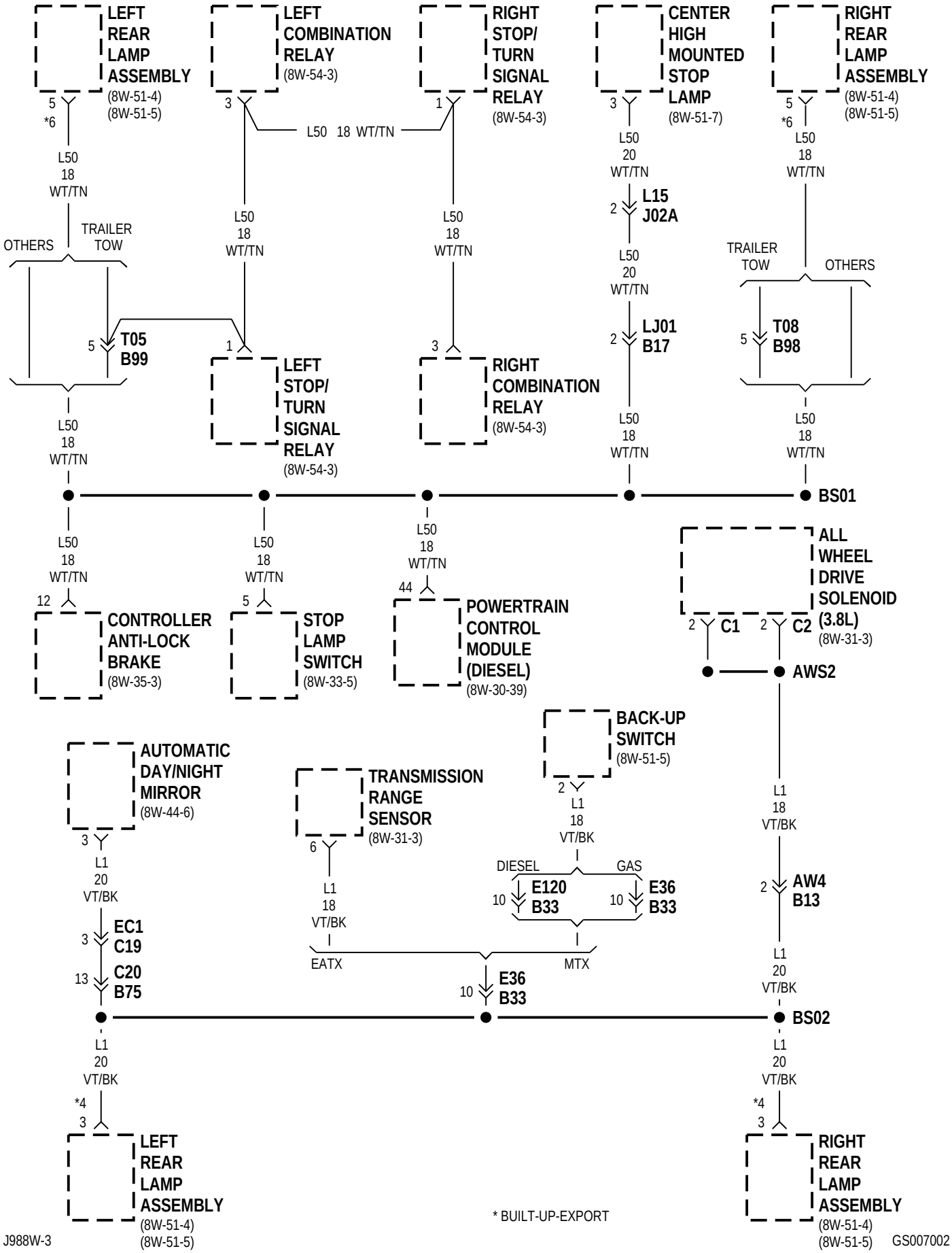
LEFT REAR LAMP ASSEMBLY (8W-51-4) (8W-51-5)
LEFT COMBINATION RELAY (8W-54-3)
RIGHT STOP/ TURN SIGNAL RELAY (8W-54-3)
CENTER HIGH MOUNTED STOP LAMP (8W-51-7)
RIGHT REAR LAMP ASSEMBLY (8W-51-4) (8W-51-5)
L50 18 WT/TN
OTHERS
TRAILER TOW
T05 B99
T08 B98
L15 J02A
LJ01 B17
LEFT STOP/ TURN SIGNAL RELAY (8W-54-3)
RIGHT COMBINATION RELAY (8W-54-3)
BS01
CONTROLLER ANTI-LOCK BRAKE (8W-35-3)
STOP LAMP SWITCH (8W-33-5)
POWERTRAIN CONTROL MODULE (DIESEL) (8W-30-39)
ALL WHEEL DRIVE SOLENOID (3.8L) (8W-31-3)
C1
C2
AWS2
AUTOMATIC DAY/NIGHT MIRROR (8W-44-6)
TRANSMISSION RANGE SENSOR (8W-31-3)
BACK-UP SWITCH (8W-51-5)
L1 20 VT/BK
L1 18 VT/BK
DIESEL
GAS
E120 B33
E36 B33
AW4 B13
EC1 C19
C20 B75
EATX
MTX
BS02
LEFT REAR LAMP ASSEMBLY (8W-51-4) (8W-51-5)
RIGHT REAR LAMP ASSEMBLY (8W-51-4) (8W-51-5)
* BUILT-UP-EXPORT
J988W-3
GS007002

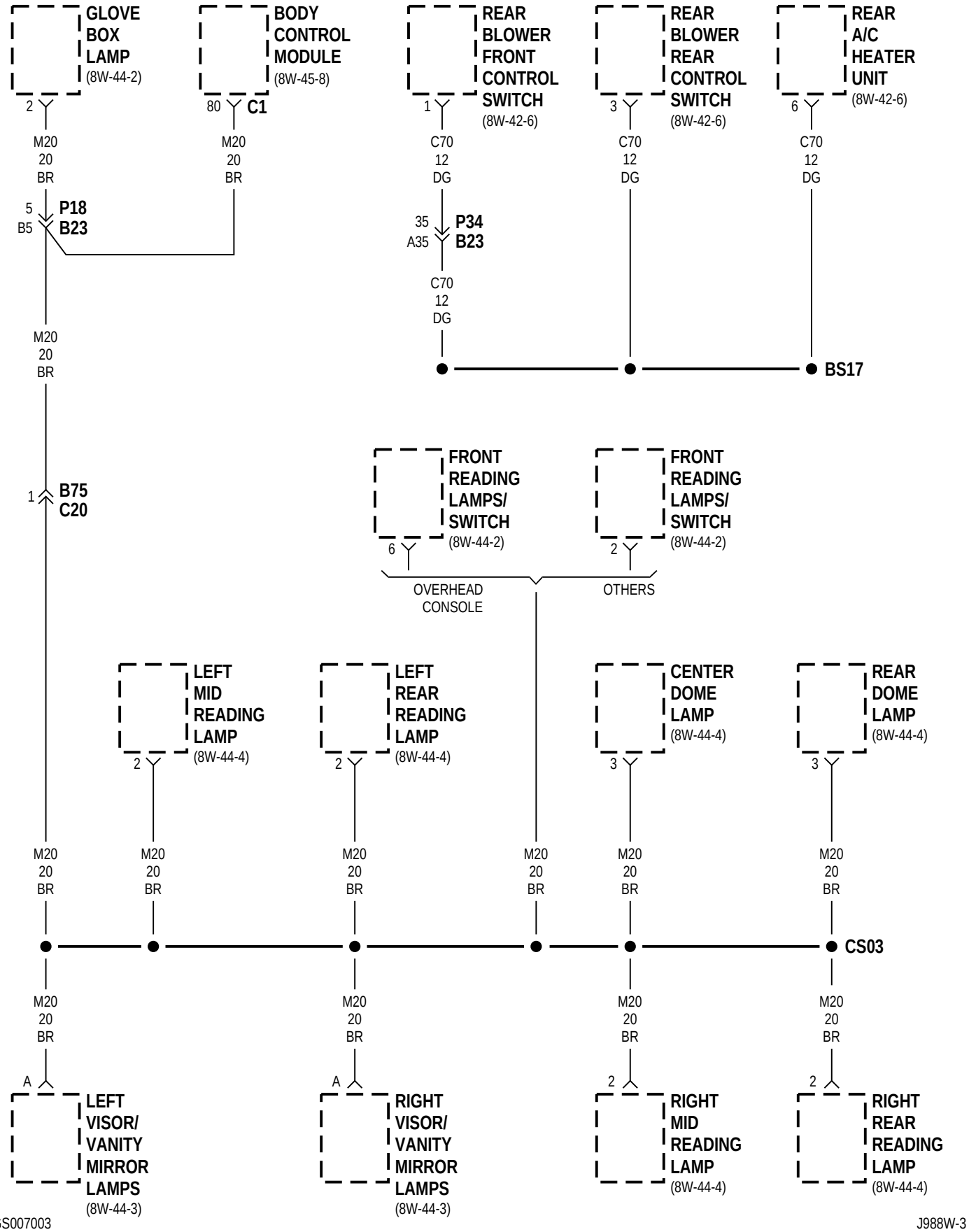
GLOVE BOX LAMP (8W-44-2)
2
M20 20 BR
BODY CONTROL MODULE (8W-45-8)
80 C1
M20 20 BR
REAR BLOWER FRONT CONTROL SWITCH (8W-42-6)
1
C70 12 DG
REAR BLOWER REAR CONTROL SWITCH (8W-42-6)
3
C70 12 DG
REAR A/C HEATER UNIT (8W-42-6)
6
C70 12 DG
5 P18
B5 B23
35 P34
A35 B23
C70 12 DG
BS17
M20 20 BR
1 B75 C20
FRONT READING LAMPS/ SWITCH (8W-44-2)
6
OVERHEAD CONSOLE
FRONT READING LAMPS/ SWITCH (8W-44-2)
2
OTHERS
LEFT MID READING LAMP (8W-44-4)
2
LEFT REAR READING LAMP (8W-44-4)
2
CENTER DOME LAMP (8W-44-4)
3
REAR DOME LAMP (8W-44-4)
3
M20 20 BR
CS03
A
LEFT VISOR/ VANITY MIRROR LAMPS (8W-44-3)
A
RIGHT VISOR/ VANITY MIRROR LAMPS (8W-44-3)
2
RIGHT MID READING LAMP (8W-44-4)
2
RIGHT REAR READING LAMP (8W-44-4)

2.0L

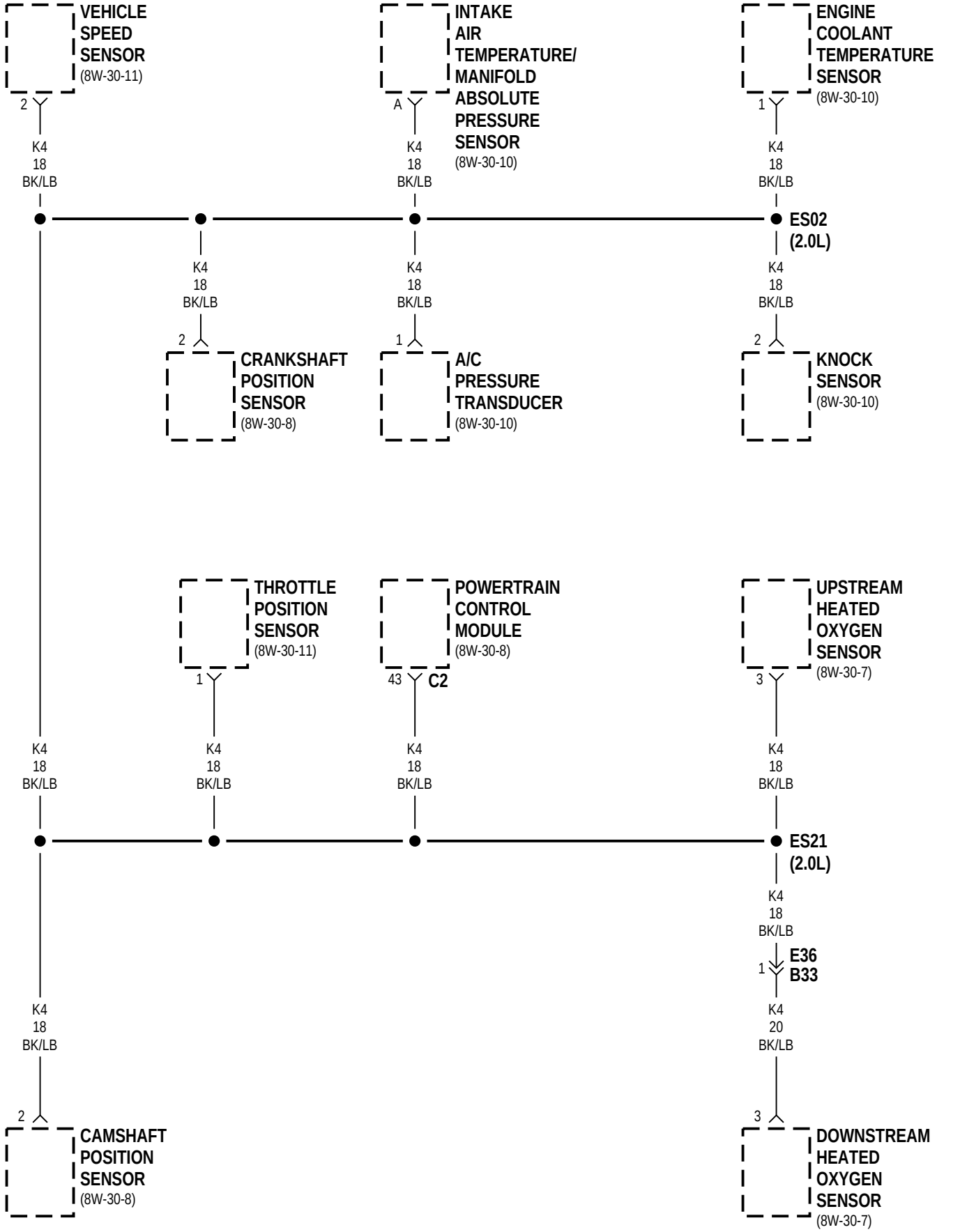
VEHICLE SPEED SENSOR (8W-30-11)
2
K4 18 BK/LB
INTAKE AIR TEMPERATURE/ MANIFOLD ABSOLUTE PRESSURE SENSOR (8W-30-10)
A
K4 18 BK/LB
ENGINE COOLANT TEMPERATURE SENSOR (8W-30-10)
1
K4 18 BK/LB
ES02 (2.0L)
K4 18 BK/LB
2
CRANKSHAFT POSITION SENSOR (8W-30-8)
K4 18 BK/LB
1
A/C PRESSURE TRANSDUCER (8W-30-10)
K4 18 BK/LB
2
KNOCK SENSOR (8W-30-10)
THROTTLE POSITION SENSOR (8W-30-11)
1
K4 18 BK/LB
POWERTRAIN CONTROL MODULE (8W-30-8)
43
C2
K4 18 BK/LB
UPSTREAM HEATED OXYGEN SENSOR (8W-30-7)
3
K4 18 BK/LB
ES21 (2.0L)
K4 18 BK/LB
1
E36
B33
K4 20 BK/LB
3
DOWNSTREAM HEATED OXYGEN SENSOR (8W-30-7)
K4 18 BK/LB
2
CAMSHAFT POSITION SENSOR (8W-30-8)

2.4L

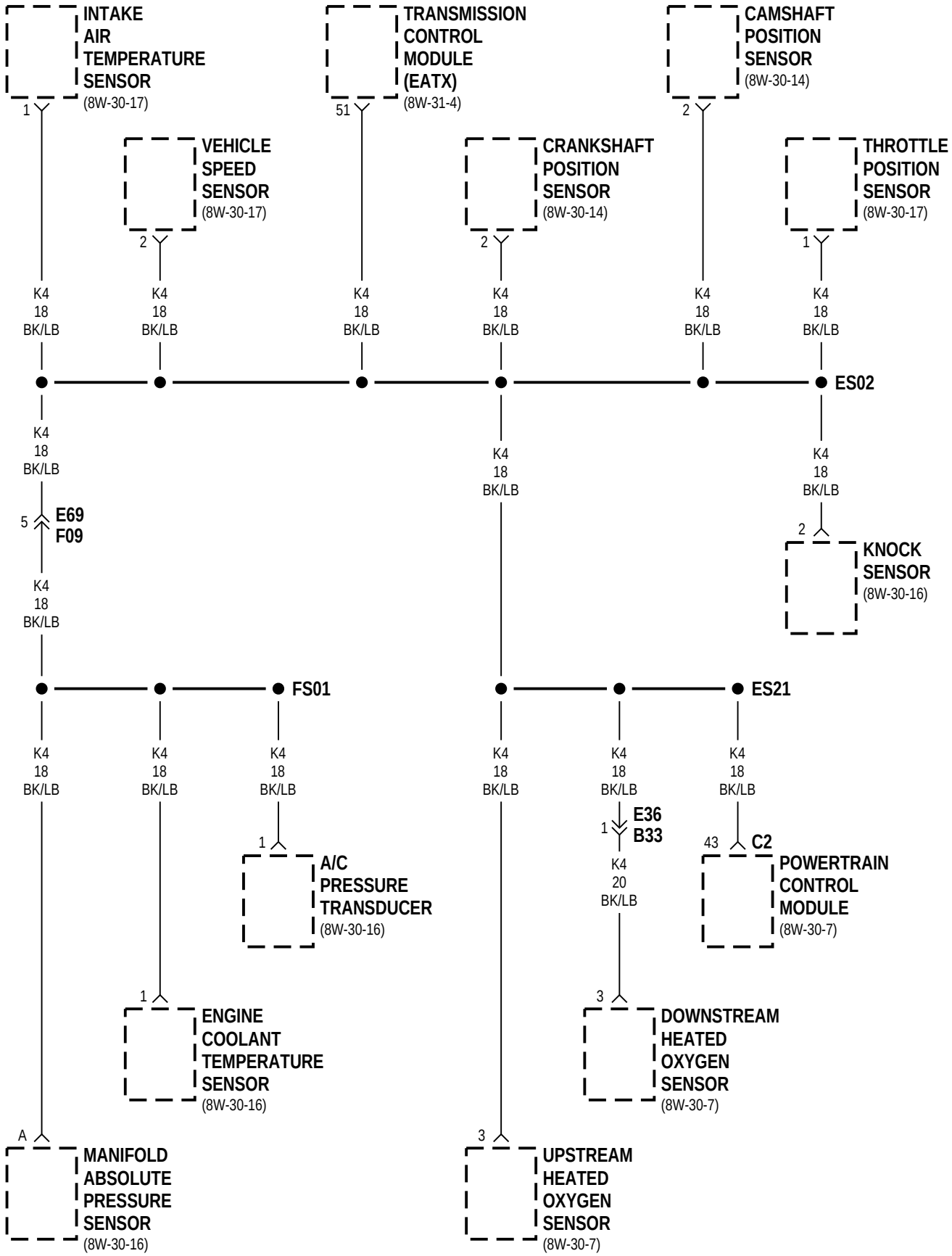

GS007005

J988W-3

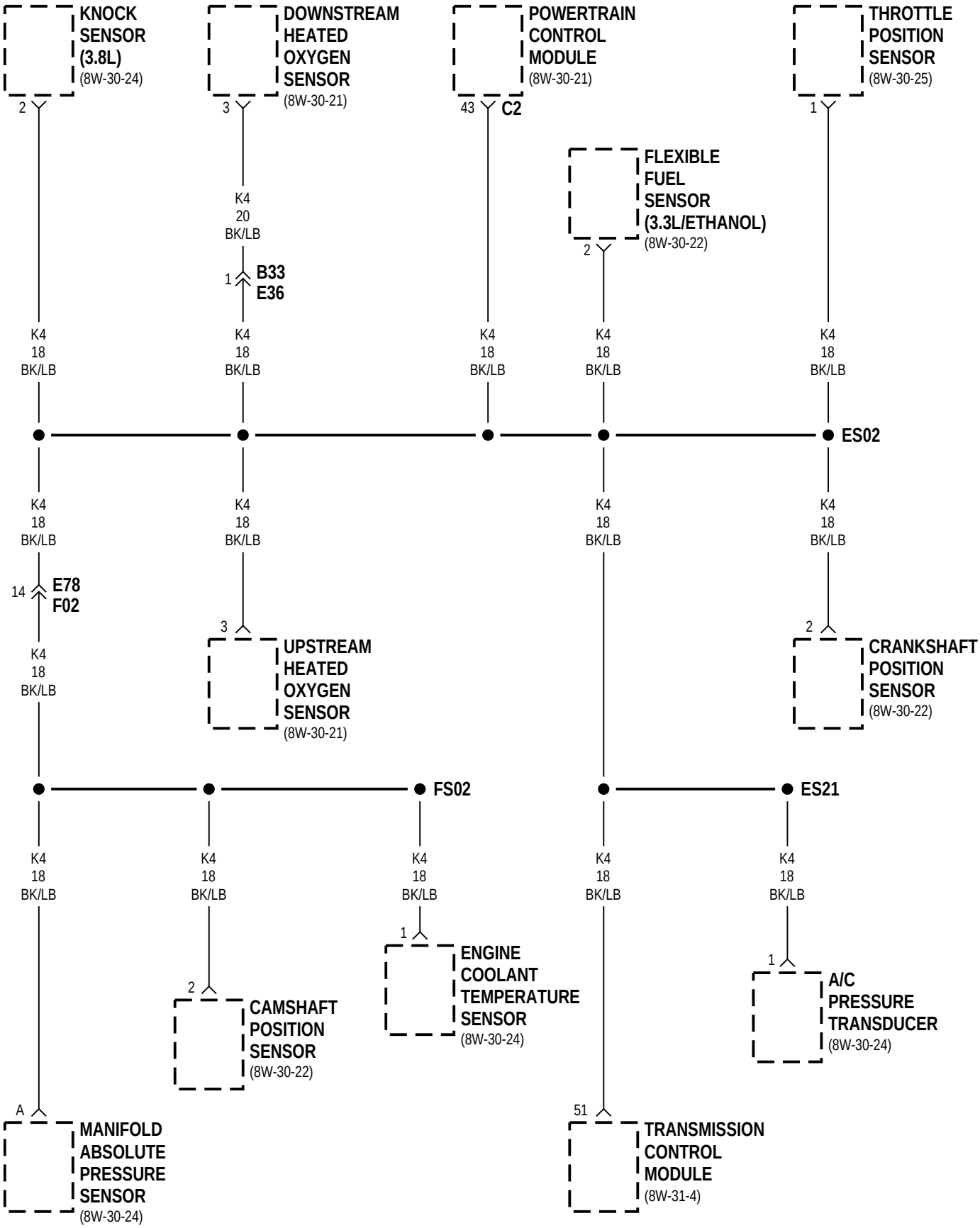

J988W-3

GS007006

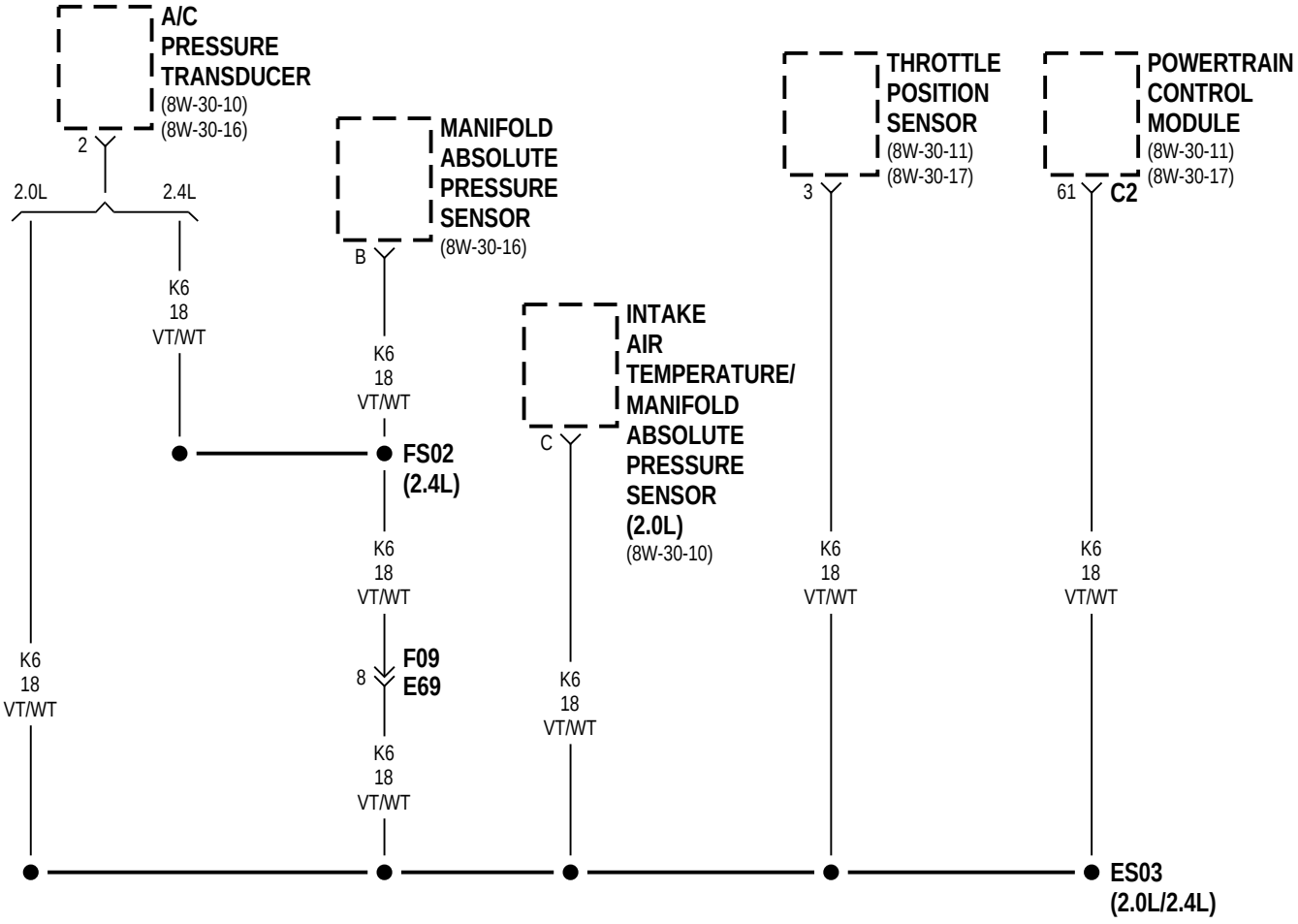
A/C
PRESSURE
TRANSDUCER
(8W-30-10)
(8W-30-16)
2
2.0L
2.4L
K6
18
VT/WT
MANIFOLD
ABSOLUTE
PRESSURE
SENSOR
(8W-30-16)
B
K6
18
VT/WT
FS02
(2.4L)
K6
18
VT/WT
8
F09
E69
K6
18
VT/WT
INTAKE
AIR
TEMPERATURE/
MANIFOLD
ABSOLUTE
PRESSURE
SENSOR
(2.0L)
(8W-30-10)
C
K6
18
VT/WT
THROTTLE
POSITION
SENSOR
(8W-30-11)
(8W-30-17)
3
K6
18
VT/WT
POWERTRAIN
CONTROL
MODULE
(8W-30-11)
(8W-30-17)
61
C2
K6
18
VT/WT
K6
18
VT/WT
ES03
(2.0L/2.4L)

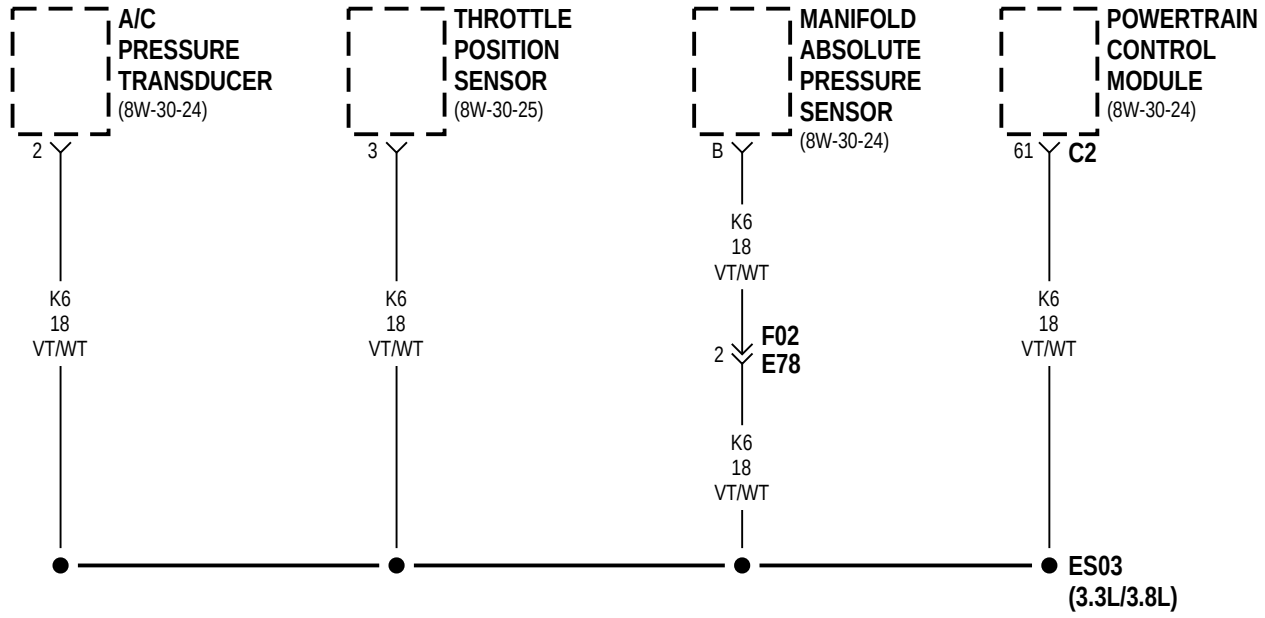
A/C
PRESSURE
TRANSDUCER
(8W-30-24)
2
K6
18
VT/WT
THROTTLE
POSITION
SENSOR
(8W-30-25)
3
K6
18
VT/WT
MANIFOLD
ABSOLUTE
PRESSURE
SENSOR
(8W-30-24)
B
K6
18
VT/WT
2
F02
E78
K6
18
VT/WT
POWERTRAIN
CONTROL
MODULE
(8W-30-24)
61
C2
K6
18
VT/WT
ES03
(3.3L/3.8L)

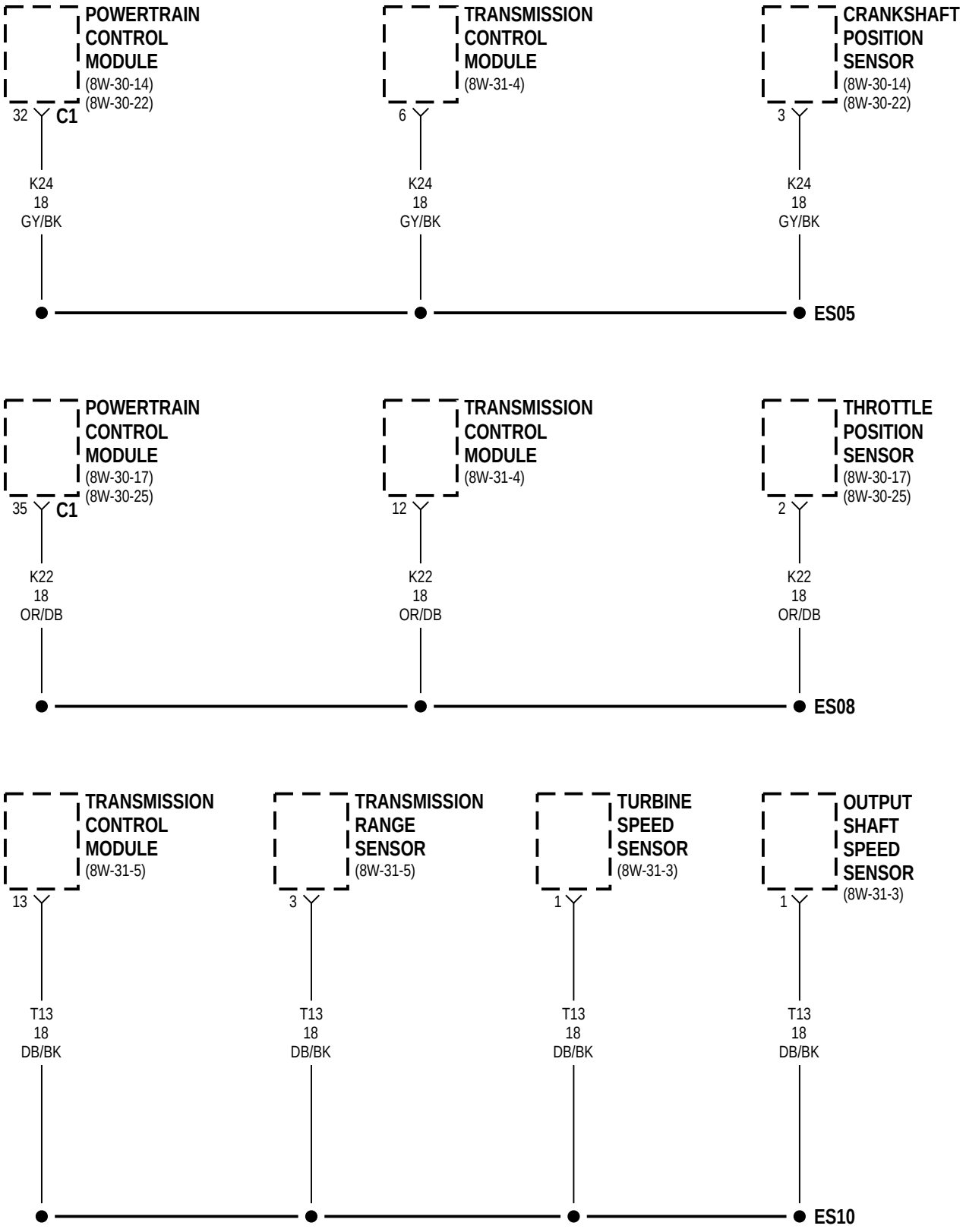
POWERTRAIN CONTROL MODULE
(8W-30-14)
(8W-30-22)
32
C1
K24
18
GY/BK
TRANSMISSION CONTROL MODULE
(8W-31-4)
6
K24
18
GY/BK
CRANKSHAFT POSITION SENSOR
(8W-30-14)
(8W-30-22)
3
K24
18
GY/BK
ES05
POWERTRAIN CONTROL MODULE
(8W-30-17)
(8W-30-25)
35
C1
K22
18
OR/DB
TRANSMISSION CONTROL MODULE
(8W-31-4)
12
K22
18
OR/DB
THROTTLE POSITION SENSOR
(8W-30-17)
(8W-30-25)
2
K22
18
OR/DB
ES08
TRANSMISSION CONTROL MODULE
(8W-31-5)
13
T13
18
DB/BK
TRANSMISSION RANGE SENSOR
(8W-31-5)
3
T13
18
DB/BK
TURBINE SPEED SENSOR
(8W-31-3)
1
T13
18
DB/BK
OUTPUT SHAFT SPEED SENSOR
(8W-31-3)
1
T13
18
DB/BK
ES10

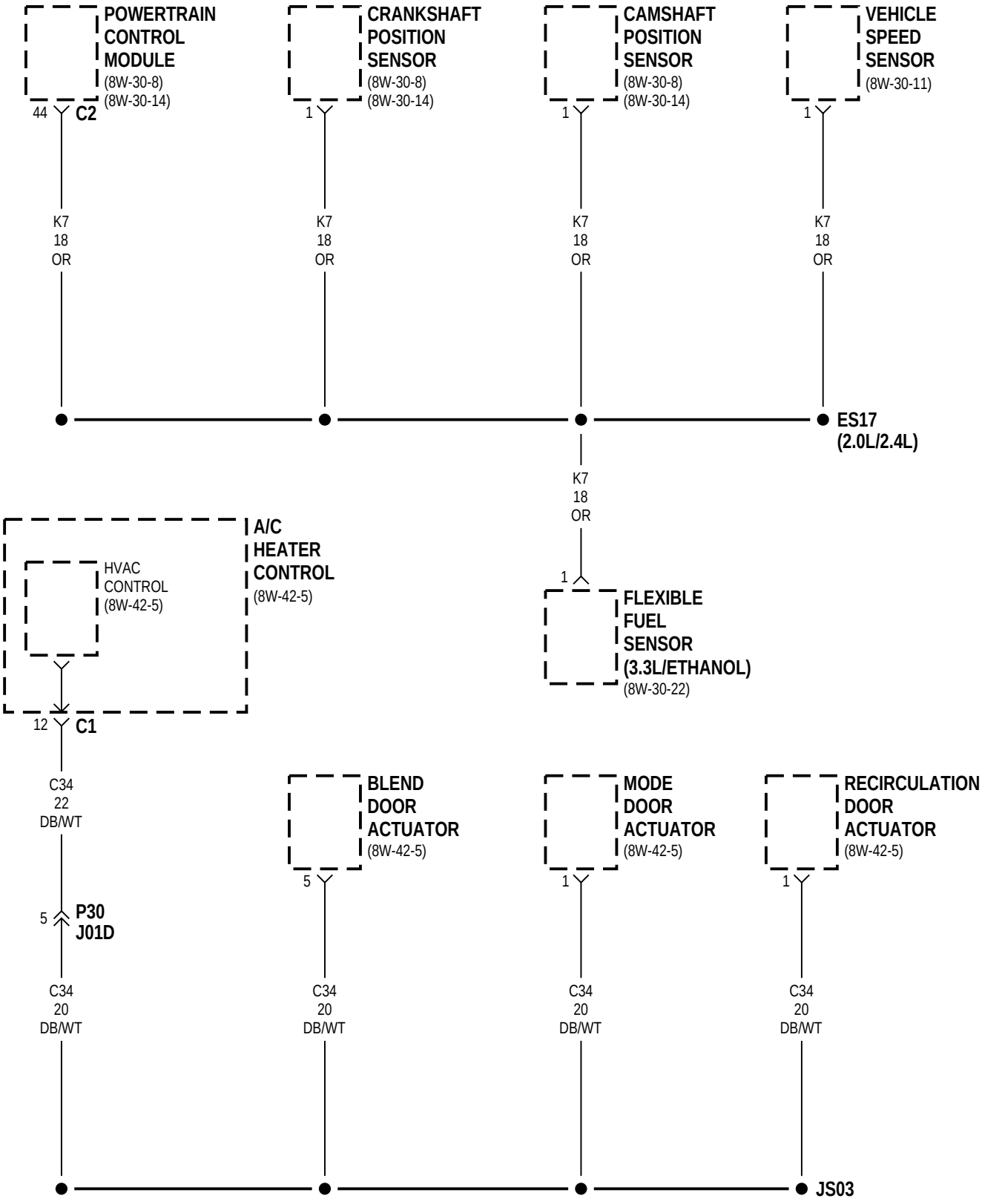
POWERTRAIN CONTROL MODULE
(8W-30-8)
(8W-30-14)
44 C2
CRANKSHAFT POSITION SENSOR
(8W-30-8)
(8W-30-14)
1
CAMSHAFT POSITION SENSOR
(8W-30-8)
(8W-30-14)
1
VEHICLE SPEED SENSOR
(8W-30-11)
1
K7
18
OR
ES17
(2.0L/2.4L)
A/C HEATER CONTROL
(8W-42-5)
HVAC CONTROL
(8W-42-5)
12 C1
FLEXIBLE FUEL SENSOR
(3.3L/ETHANOL)
(8W-30-22)
C34
22
DB/WT
5 P30
J01D
BLEND DOOR ACTUATOR
(8W-42-5)
MODE DOOR ACTUATOR
(8W-42-5)
RECIRCULATION DOOR ACTUATOR
(8W-42-5)
C34
20
DB/WT
JS03

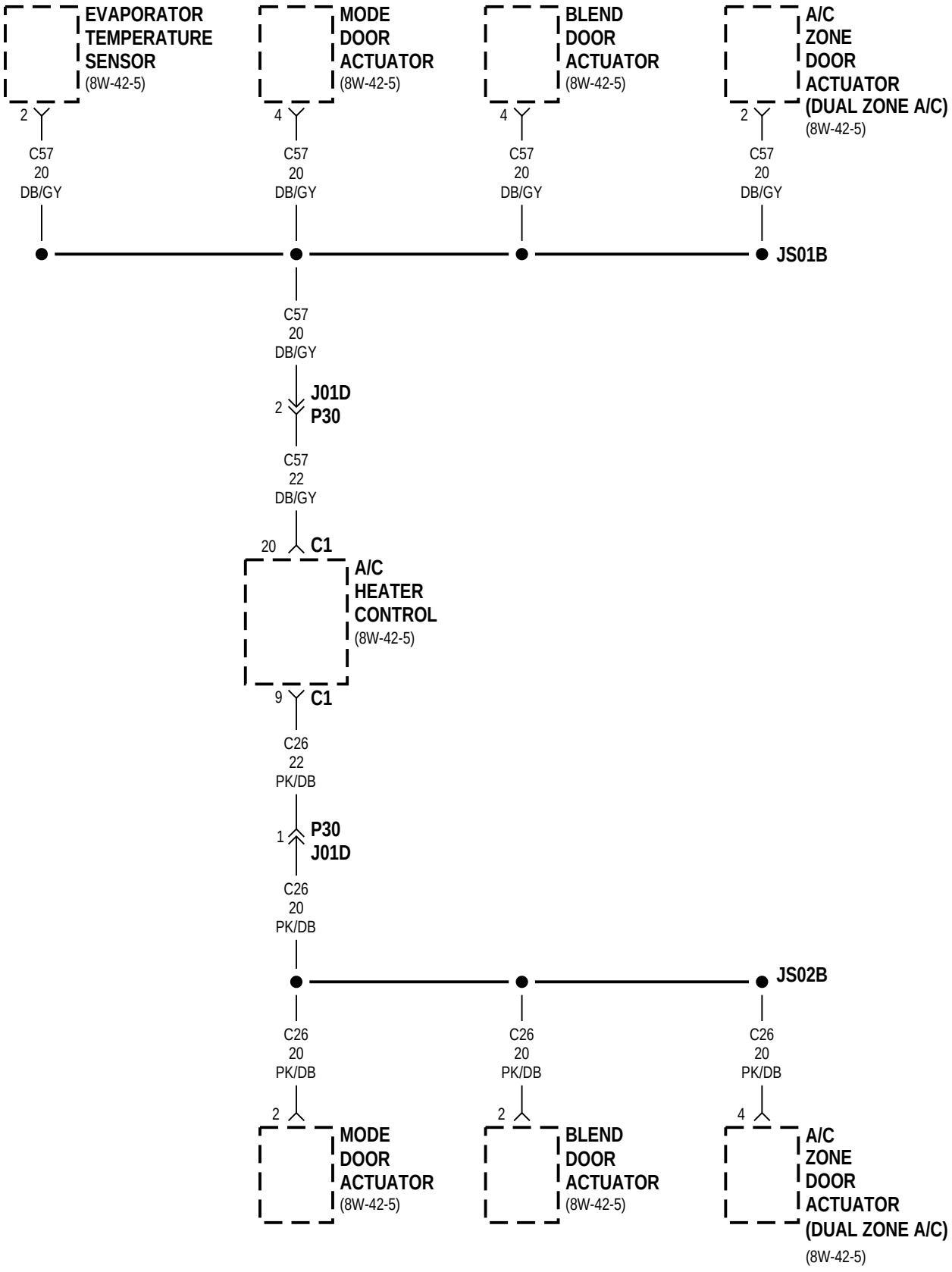
EVAPORATOR TEMPERATURE SENSOR
(8W-42-5)
MODE DOOR ACTUATOR
(8W-42-5)
BLEND DOOR ACTUATOR
(8W-42-5)
A/C ZONE DOOR ACTUATOR (DUAL ZONE A/C)
(8W-42-5)
2
4
4
2
C57
20
DB/GY
JS01B
C57
20
DB/GY
2
J01D
P30
C57
22
DB/GY
20
C1
A/C HEATER CONTROL
(8W-42-5)
9
C1
C26
22
PK/DB
1
P30
J01D
C26
20
PK/DB
JS02B
C26
20
PK/DB
2
4
MODE DOOR ACTUATOR
(8W-42-5)
BLEND DOOR ACTUATOR
(8W-42-5)
A/C ZONE DOOR ACTUATOR (DUAL ZONE A/C)
(8W-42-5)

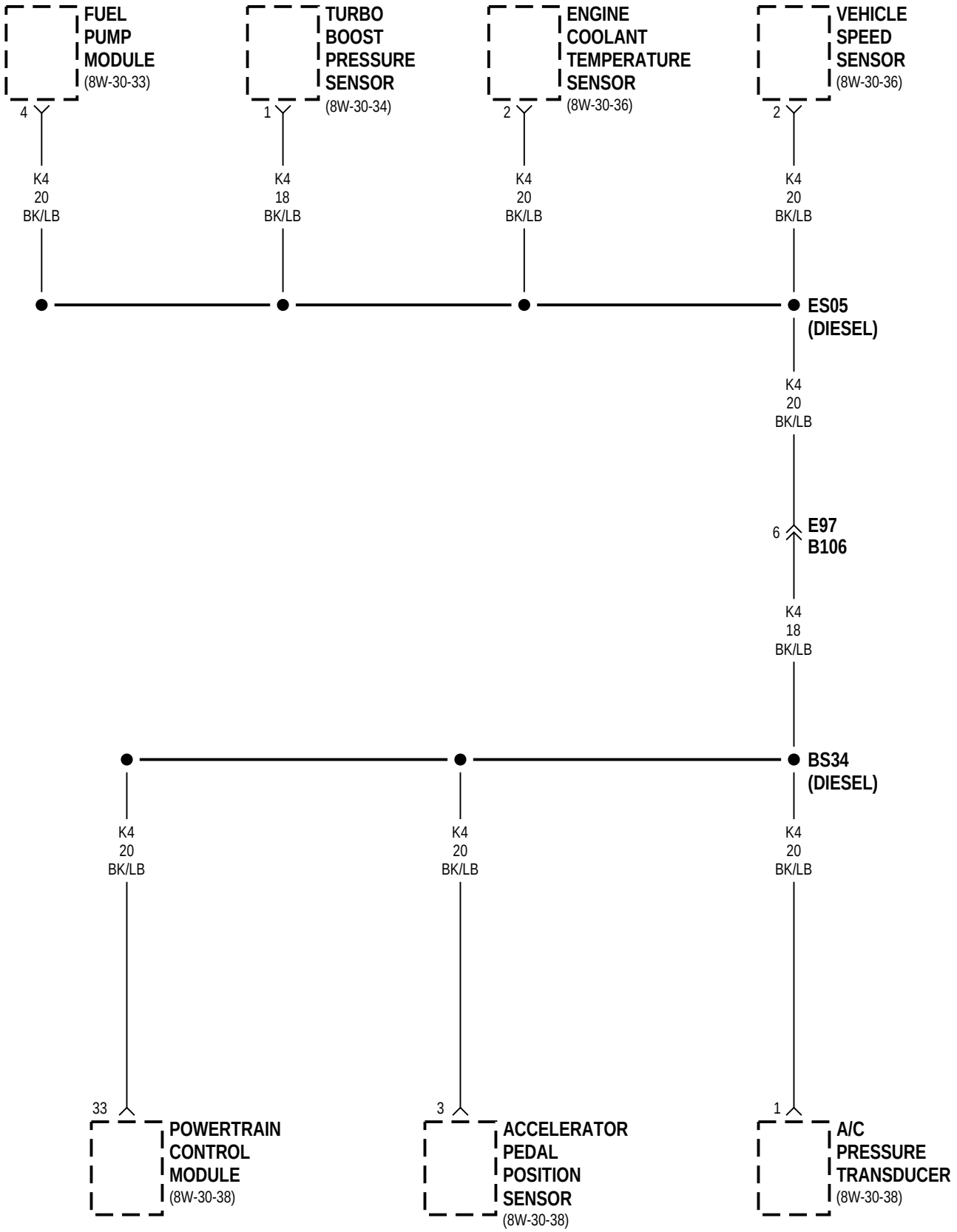
FUEL PUMP MODULE (8W-30-33)
4
K4 20 BK/LB
TURBO BOOST PRESSURE SENSOR (8W-30-34)
1
K4 18 BK/LB
ENGINE COOLANT TEMPERATURE SENSOR (8W-30-36)
2
K4 20 BK/LB
VEHICLE SPEED SENSOR (8W-30-36)
2
K4 20 BK/LB
ES05 (DIESEL)
K4 20 BK/LB
6
E97 B106
K4 18 BK/LB
BS34 (DIESEL)
K4 20 BK/LB
33
POWERTRAIN CONTROL MODULE (8W-30-38)
K4 20 BK/LB
3
ACCELERATOR PEDAL POSITION SENSOR (8W-30-38)
K4 20 BK/LB
1
A/C PRESSURE TRANSDUCER (8W-30-38)

8W-80 CONNECTOR PIN-OUTS

Component	Page
A/C Heater Control - C1	8W-80-5
A/C Heater Control - C2	8W-80-5
A/C Compressor Clutch	8W-80-5
A/C Pressure Transducer (Gas)	8W-80-6
A/C Pressure Transducer (Diesel)	8W-80-6
A/C Zone Door Actuator	8W-80-6
Accelerator Pedal Position Sensor (Diesel)	8W-80-6
Airbag Control Module - C1	8W-80-6
Airbag Control Module - C2	8W-80-7
All Wheel Drive Solenoid - C1	8W-80-7
All Wheel Drive Solenoid - C2	8W-80-7
Ambient Air Temperature Sensor	8W-80-7
Ash Receiver Lamp (LHD)	8W-80-8
Ash Receiver Lamp (RHD)	8W-80-8
Automatic Day/Night Mirror	8W-80-8
B09 HS5D	8W-80-9
B09 S02	8W-80-9
B13 AW4	8W-80-9
B17 LJ01	8W-80-9
B23 P18	8W-80-10
B23 P34	8W-80-11
B33 E120	8W-80-12
B33 E36	8W-80-12
B56 HS5P	8W-80-12
B56 S02	8W-80-12
B70 E43	8W-80-13
B75 C20	8W-80-13
B98 T08	8W-80-14
B99 T05	8W-80-14
Back-Up Switch	8W-80-14
Blend Door Actuator	8W-80-14
Body Control Module - C1	8W-80-15
Body Control Module - C2	8W-80-16
Brake Pressure Switch	8W-80-16
C19 EC1	8W-80-17
Camshaft Position Sensor	8W-80-17
Center Dome Lamp	8W-80-17
Center High Mounted Stop Lamp	8W-80-17
Clockspring - C1	8W-80-18
Clockspring - C2	8W-80-18
Clutch Interlock Switch	8W-80-18
Clutch Interlock Switch Jumper	8W-80-18
Clutch Switch	8W-80-18
Controller Anti-Lock Brake	8W-80-19
Crank Case Heater	8W-80-19
Crankshaft Position Sensor	8W-80-19
D01D B02	8W-80-20
D01P B03	8W-80-20
D02 B01	8W-80-20
D02 B120 (LHD)	8W-80-21
D02 B120 (RHD)	8W-80-21
Data Link Connector	8W-80-22
Downstream Heated Oxygen Sensor	8W-80-22
Driver Door Arm/Disarm Switch	8W-80-22
Driver Door Courtesy Lamp	8W-80-22
Driver Door Lock Motor	8W-80-23
Driver Door Lock Switch	8W-80-23
Driver Heated Seat Back	8W-80-23
Driver Heated Seat Cushion	8W-80-23
Driver Heated Seat Module	8W-80-23
Driver Heated Seat Switch	8W-80-24
Driver Power Mirror - C1	8W-80-24
Driver Power Mirror - C2	8W-80-24
Driver Power Seat Switch	8W-80-25
Driver Power Window Switch	8W-80-25
Driver Seat Front Vertical Motor	8W-80-25
Driver Seat Horizontal Motor	8W-80-25
Driver Seat Rear Vertical Motor	8W-80-26
Driver Seat Recliner Motor	8W-80-26
Driver Window Motor	8W-80-26
E40 RF3	8W-80-26
E69 F09	8W-80-27
E78 F02	8W-80-27
E95 B107	8W-80-27
E96 B108	8W-80-28
E97 B106	8W-80-28
EGR Solenoid (2.4L MTX/3.3L/3.8L)	8W-80-28
EGR Solenoid (Diesel)	8W-80-28
Electric Wiper De-Icer - C1	8W-80-29
Electric Wiper De-Icer - C2	8W-80-29
Engine Coolant Temperature Sensor (Diesel)	8W-80-29
Engine Coolant Temperature Sensor (Gas)	8W-80-29
Engine Oil Pressure Switch	8W-80-29
Engine Speed Sensor (Diesel)	8W-80-30
Evap Leak Detection Pump (Except Built-Up-Export)	8W-80-30
Evap/Purge Solenoid	8W-80-30
Evaporator Temperature Sensor	8W-80-30
Flexible Fuel Sensor	8W-80-30
Front Blower Motor	8W-80-31
Front Blower Motor Resistor Block	8W-80-31
Front Cigar Lighter/Power Outlet	8W-80-31
Front Reading Lamps/Switch	8W-80-32
Front Reading Lamps/Switch (Overhead Console)	8W-80-32
Front Washer Motor	8W-80-32
Fuel Heater	8W-80-32
Fuel Injector No. 1 (2.0L/2.4L)	8W-80-33
Fuel Injector No. 1 (3.3L/3.8L)	8W-80-33
Fuel Injector No. 2 (2.0L/2.4L)	8W-80-33
Fuel Injector No. 2 (3.3L/3.8L)	8W-80-33
Fuel Injector No. 3 (2.0L/2.4L)	8W-80-33

Component	Page
Fuel Injector No. 3 (3.3L/3.8L)	8W-80-34
Fuel Injector No. 4 (2.0L/2.4L)	8W-80-34
Fuel Injector No. 4 (3.3L/3.8L)	8W-80-34
Fuel Injector No. 5 (3.3L/3.8L)	8W-80-34
Fuel Injector No. 6 (3.3L/3.8L)	8W-80-34
Fuel Pump Module	8W-80-35
Fuel Tank Module	8W-80-35
G200	8W-80-35
G300	8W-80-36
G301 (Diesel)	8W-80-37
G301 (Gas)	8W-80-37
G302	8W-80-38
G400	8W-80-38
Generator	8W-80-38
Glove Box Lamp	8W-80-39
Glow Plug Relay	8W-80-39
HS6D S02	8W-80-39
HS6P S02	8W-80-39
Headlamp Switch - C1	8W-80-39
Headlamp Switch - C2	8W-80-40
Headlamp Washer	8W-80-40
High Note Horn	8W-80-40
Hood Ajar Switch	8W-80-41
Horn/Speed Control Switch	8W-80-41
Idle Air Control Motor	8W-80-41
Ignition Coil Pack (2.0L/2.4L)	8W-80-41
Ignition Coil Pack (3.3L/3.8L)	8W-80-41
Ignition Switch - C1	8W-80-42
Ignition Switch - C2	8W-80-42
Ignition Switch - C3	8W-80-42
Instrument Cluster	8W-80-42
Intake Air Temperature Sensor	8W-80-43
Intake Air Temperature/Manifold Absolute Pressure Sensor	8W-80-43
J02A L15	8W-80-43
J03A L16	8W-80-43
Junction Block - C1	8W-80-44
Junction Block - C2	8W-80-45
Junction Block - C3	8W-80-46
Junction Block - C4	8W-80-47
Key-In Halo Lamp	8W-80-48
Key-In Switch	8W-80-48
Knock Sensor	8W-80-48
Left Combination Relay	8W-80-48
Left Door Speaker	8W-80-48
Left Fog Lamp (Built-Up-Export)	8W-80-49
Left Fog Lamp (Except Built-Up-Export)	8W-80-49
Left Front Panel Speaker	8W-80-49
Left Front Park/Turn Signal Lamp (Built-Up-Export)	8W-80-49
Left Front Park/Turn Signal Lamp (Except Built-Up-Export)	8W-80-49
Left Front Speaker	8W-80-49
Left Front Wheel Speed Sensor	8W-80-50
Left Headlamp (Built-Up-Export)	8W-80-50
Left Headlamp (Except Built-Up-Export)	8W-80-50
Left Headlamp Leveling Motor (Built-Up-Export)	8W-80-50
Left High Headlamp (Chrysler) (Except Built-Up-Export)	8W-80-50
Left Liftgate Flood Lamp	8W-80-51
Left Low Headlamp (Chrysler) (Except Built-Up-Export)	8W-80-51
Left Mid Reading Lamp	8W-80-51
Left Rear Door Ajar Switch	8W-80-51
Left Rear Lamp Assembly (Built-Up-Export)	8W-80-51
Left Rear Lamp Assembly (Except Built-Up-Export)	8W-80-51
Left Rear Pillar Speaker	8W-80-52
Left Rear Reading Lamp	8W-80-52
Left Rear Sliding Door Contacts	8W-80-52
Left Rear Speaker	8W-80-52
Left Rear Vent Motor (LHD)	8W-80-52
Left Rear Vent Motor (RHD)	8W-80-53
Left Rear Wheel Speed Sensor	8W-80-53
Left Repeater Lamp	8W-80-53
Left Stop/Turn Signal Relay	8W-80-53
Left Visor/Vanity Mirror Lamps	8W-80-53
License Lamp	8W-80-54
Liftgate Ajar Switch	8W-80-54
Liftgate Arm/Disarm Switch	8W-80-54
Liftgate Lock Motor	8W-80-54
Low Coolant Level Switch	8W-80-54
Low Note Horn	8W-80-54
Low Washer Fluid Switch	8W-80-54
Manifold Absolute Pressure Sensor	8W-80-55
Memory Power Seat Switch	8W-80-55
Memory Seat Front Vertical Motor	8W-80-55
Memory Seat Front Vertical Position Sensor	8W-80-55
Memory Seat Horizontal Motor	8W-80-55
Memory Seat Horizontal Position Sensor	8W-80-56
Memory Seat Rear Vertical Motor	8W-80-56
Memory Seat Rear Vertical Position Sensor	8W-80-56
Memory Seat Recliner Motor	8W-80-56
Memory Seat Recliner Position Sensor	8W-80-56
Memory Seat/Mirror Module - C1	8W-80-57
Memory Seat/Mirror Module - C2	8W-80-57
Memory Seat/Mirror Module - C3	8W-80-58
Memory Set Switch	8W-80-58
Message Center (LHD)	8W-80-58
Message Center (RHD)	8W-80-59
Mode Door Actuator	8W-80-59
Multi-Function Switch	8W-80-59
Needle Movement Sensor	8W-80-60
Output Shaft Speed Sensor	8W-80-60
Overhead Console	8W-80-60

Component	Page
P30 J01D	8W-80-60
P50	8W-80-61
Park/Neutral Position Switch (EATX)	8W-80-61
Park/Neutral Position Switch (MTX)	8W-80-61
Passenger Airbag Squib	8W-80-61
Passenger Door Arm/Disarm Switch	8W-80-61
Passenger Door Courtesy Lamp	8W-80-62
Passenger Door Lock Motor	8W-80-62
Passenger Door Lock Switch	8W-80-62
Passenger Heated Seat Back	8W-80-62
Passenger Heated Seat Cushion	8W-80-62
Passenger Heated Seat Module	8W-80-62
Passenger Heated Seat Switch	8W-80-63
Passenger Power Mirror C1	8W-80-63
Passenger Power Mirror C2	8W-80-63
Passenger Power Seat Switch	8W-80-64
Passenger Power Window Switch	8W-80-64
Passenger Seat Front Vertical Motor	8W-80-64
Passenger Seat Horizontal Motor	8W-80-64
Passenger Seat Rear Vertical Motor	8W-80-65
Passenger Seat Recliner Motor	8W-80-65
Passenger Window Motor	8W-80-65
Power Distribution Center - C1	8W-80-65
Power Distribution Center - C2	8W-80-66
Power Distribution Center - C3	8W-80-66
Power Distribution Center - C4	8W-80-67
Power Distribution Center - C5	8W-80-67
Power Distribution Center - C6	8W-80-67
Power Distribution Center - C7	8W-80-68
Power Distribution Center - C8	8W-80-68
Power Folding Mirror Switch	8W-80-68
Power Mirror Switch	8W-80-68
Power Seat Circuit Breaker	8W-80-68
Powertrain Control Module (Diesel)	8W-80-69
Powertrain Control Module - C1	8W-80-71
Powertrain Control Module - C2	8W-80-72
PRNDL Feed	8W-80-72
PRNDL Switch	8W-80-73
Radiator Fan Disconnect	8W-80-73
Radiator Fan No. 1	8W-80-73
Radiator Fan No. 2	8W-80-73
Radiator Fan Relay (Gas)	8W-80-73
Radiator Fan Relay No. 1 (Diesel)	8W-80-74
Radiator Fan Relay No. 2 (Diesel)	8W-80-74
Radiator Fan Relay No. 3 (Diesel)	8W-80-74
Radio - C1	8W-80-74
Radio - C2	8W-80-75
Radio - C3	8W-80-75
Radio Choke	8W-80-75
Rear A/C Heater Unit	8W-80-75
Rear Blower Front Control Switch	8W-80-76
Rear Blower Rear Control Switch	8W-80-76
Rear Cigar Lighter/Power Outlet	8W-80-76
Rear Dome Lamp	8W-80-77
Rear Washer Motor	8W-80-77
Rear Wiper Motor	8W-80-77
Recirculation Door Actuator	8W-80-77
Remote Keyless Entry Module	8W-80-77
Right Combination Relay	8W-80-78
Right Door Speaker	8W-80-78
Right Fog Lamp (Built-Up-Export)	8W-80-78
Right Fog Lamp (Except Built-Up-Export)	8W-80-78
Right Front Panel Speaker	8W-80-78
Right Front Park/Turn Signal Lamp (Built-Up-Export)	8W-80-79
Right Front Park/Turn Signal Lamp (Except Built-Up-Export)	8W-80-79
Right Front Speaker	8W-80-79
Right Front Wheel Speed Sensor	8W-80-79
Right Headlamp (Built-Up-Export)	8W-80-79
Right Headlamp (Except Built-Up-Export)	8W-80-80
Right Headlamp Leveling Motor (Built-Up-Export)	8W-80-80
Right High Headlamp (Chrysler) (Except Built-Up-Export)	8W-80-80
Right Liftgate Flood Lamp	8W-80-80
Right Low Headlamp (Chrysler) (Except Built-Up-Export)	8W-80-80
Right Mid Reading Lamp	8W-80-81
Right Rear Door Ajar Switch	8W-80-81
Right Rear Lamp Assembly (Built-Up-Export)	8W-80-81
Right Rear Lamp Assembly (Except Built-Up-Export)	8W-80-81
Right Rear Pillar Speaker	8W-80-81
Right Rear Reading Lamp	8W-80-81
Right Rear Sliding Door Contacts	8W-80-82
Right Rear Speaker	8W-80-82
Right Rear Vent Motor (LHD)	8W-80-82
Right Rear Vent Motor (RHD)	8W-80-82
Right Rear Wheel Speed Sensor	8W-80-82
Right Repeater Lamp	8W-80-82
Right Stop/Turn Signal Relay	8W-80-83
Right Visor/Vanity Mirror Lamps	8W-80-83

Component	Page
Seat Belt Switch	8W-80-83
Sentry Key Immobilizer Module	8W-80-83
Speed Control Dimming Module	8W-80-83
Stop Lamp Switch	8W-80-83
Throttle Position Sensor (2.0L)	8W-80-84
Throttle Position Sensor (Except 2.0L)	8W-80-84
Traction Control Switch	8W-80-84
Trailer Tow Connector	8W-80-84
Transmission Control Module	8W-80-85
Transmission Control Solenoids	8W-80-86
Transmission Range Sensor	8W-80-86
Turbine Speed Sensor	8W-80-87
Turbo Boost Pressure Sensor	8W-80-87
Upstream Heated Oxygen Sensor	8W-80-87
Vehicle Speed Control Servo	8W-80-87
Vehicle Speed Sensor	8W-80-88
Wiper Module (Built-Up-Export)	8W-80-88
Wiper Module (Except Built-Up-Export)	8W-80-88

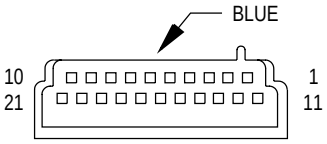

A/C HEATER CONTROL - C1

CAV	CIRCUIT	FUNCTION
1	C14 22WT/RD	REAR DEFOGGER RELAY CONTROL
2	V26 22YL/WT	REAR WIPER SWITCH MUX
3	C103 20DG/LB	A/C SWITCH SIGNAL
4	C102 22LG	ZONE DOOR FEEDBACK SIGNAL
5	C36 22RD/WT	BLEND DOOR FEEDBACK SIGNAL
6	C37 22YL	MODE DOOR FEEDBACK SIGNAL
7	C66 18BK/WT	WIPER DE-ICE SWITCHED GROUND
8	C21 22DB/OR	A/C SWITCH SENSE
9	C26 22PK/DB	5 VOLT SUPPLY
10	V23 18BR/PK	FUSED IGNITION (ST-RUN)
11	E2 20OR	PANEL LAMPS FEED
	E2 20OR*	PANEL LAMPS FEED
12	C34 22DB/WT	COMMON DOOR DRIVER
	C34 20DB/WT	COMMON DOOR DRIVER
13	C61 22DB	DUAL ZONE A/C ACTUATOR (+/-)
	C61 20DB	DUAL ZONE A/C ACTUATOR (+/-)
14	D1 20VT/BR	CCD(+)
15	C62 22DB/PK	DUAL ZONE A/C ACTUATOR (+/-)
16	D2 20WT/BK	CCD(-)
17	C33 22DB/RD	BLEND DOOR DRIVER
18	C35 22DG/YL	MODE DOOR DRIVER
19	C32 22GY/DB	RECIRCULATION DOOR DRIVER
20	C57 22DB/GY	SENSOR GROUND
21	Z2 18BK/LG	GROUND

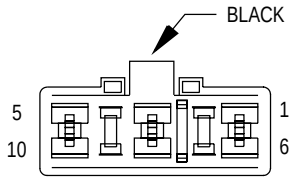

A/C HEATER CONTROL -C2

CAV	CIRCUIT	FUNCTION
1	-	-
2	C6 14LB	M2 SPEED BLOWER MOTOR
3	C104 12RD/WT	M3 SPEED BLOWER MOTOR
4	C5 16LG	M1 SPEED BLOWER MOTOR
5	-	-
6	Z1 12BK	GROUND
7	C4 16TN	LOW SPEED BLOWER MOTOR
8	C107 12TN/BK	HIGH SPEED BLOWER MOTOR
9	-	-
10	C7 12BK/TN	HIGH SPEED BLOWER MOTOR

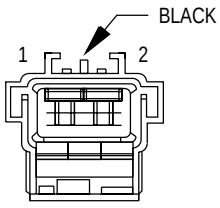

A/C COMPRESSOR CLUTCH

CAV	CIRCUIT	FUNCTION
1	C3 18DB/BK	A/C COMPRESSOR CLUTCH RELAY OUTPUT
2	Z1 18BK	GROUND

* BUILT-UP-EXPORT

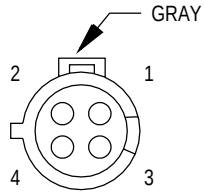

A/C PRESSURE TRANSDUCER (GAS)

CAV	CIRCUIT	FUNCTION
1	K4 18BK/LB	SENSOR GROUND
2	K6 18VT/WT	5 VOLT SUPPLY
3	C18 18DB	AC PRESSURE SIGNAL
4	-	-

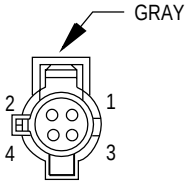

A/C PRESSURE TRANSDUCER (DIESEL)

CAV	CIRCUIT	FUNCTION
1	K4 20BK/LB	SENSOR GROUND
2	K7 20OR	5 VOLT SUPPLY
3	C18 20DB	A/C PRESSURE SIGNAL
4	-	-

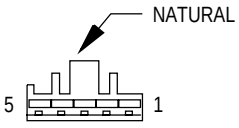

A/C ZONE DOOR ACTUATOR (DUAL ZONE A/C)

CAV	CIRCUIT	FUNCTION
1	C61 20DB	DUAL ZONE A/C ACTUATOR (+/-)
2	C57 20DB/GY	SENSOR GROUND
3	C102 20LG	ZONE DOOR FEEDBACK SIGNAL
4	C26 20PK/DB	5 VOLT SUPPLY
5	C62 20DB/PK	DUAL ZONE A/C ACTUATOR (+/-)

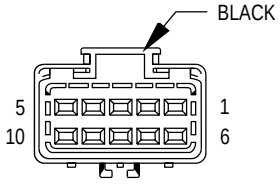

ACCELERATOR PEDAL POSITION SENSOR (DIESEL)

CAV	CIRCUIT	FUNCTION
1	-	-
2	-	-
3	K4 20BK/LB	SENSOR GROUND
4	-	-
5	K151 20WT	LOW IDLE POSITION SWITCH
6	-	-
7	K22 20OR/DB	ACCELERATOR PEDAL SENSOR SIGNAL
8	K167 20BR/YL	ACCELERATOR PEDAL SENSOR GROUND
9	-	-
10	K6 20VT/WT	5 VOLT SUPPLY

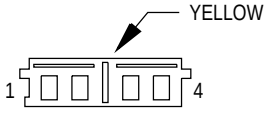

AIRBAG CONTROL MODULE - C1

CAV	CIRCUIT	FUNCTION
1	R42 18BK/YL	PASSENGER AIRBAG LINE NO. 1
2	R44 18DG/YL	PASSENGER AIRBAG LINE NO. 2
3	R43 18BK/LB	DRIVER AIRBAG LINE NO. 1
4	R45 18DG/LB	DRIVER AIRBAG LINE NO. 2

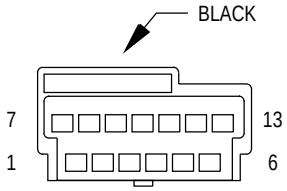

AIRBAG CONTROL MODULE - C2

CAV	CIRCUIT	FUNCTION
1	F14 18LG/YL	FUSED IGNITION (ST-RUN)
2	F23 18 DB/YL	FUSED IGNITION (RUN)
3	D1 20VT/BR	CCD BUS(+)
4	D2 20WT/BK	CCD BUS(-)
5	-	-
6	-	-
7	R41 18BK/TN	AIRBAG WARNING LAMP DRIVER
8	-	-
9	-	-
10	-	-
11	Z2 18BK/LG	GROUND
12	-	-
13	-	-

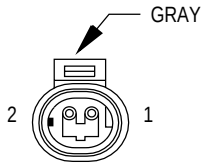

ALL WHEEL DRIVE SOLENOID - C1 (3.8L ONLY)

CAV	CIRCUIT	FUNCTION
1	Z1 18BK	GROUND
2	L1 18VT/BK	BACK-UP LAMP FEED

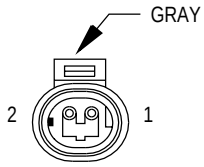

ALL WHEEL DRIVE SOLENOID - C2 (3.8L ONLY)

CAV	CIRCUIT	FUNCTION
1	Z1 18BK	GROUND
2	L1 18VT/BK	BACK-UP LAMP FEED

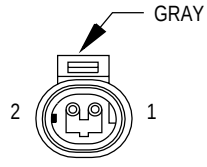

AMBIENT AIR TEMPERATURE SENSOR

CAV	CIRCUIT	FUNCTION
1	G31 20VT/LG	AMBIENT TEMPERATURE SENSOR SIGNAL
2	G32 20BK/LB	SENSOR GROUND

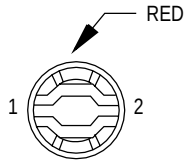

ASH RECEIVER LAMP (LHD)

CAV	CIRCUIT	FUNCTION
1	Z1 18BK	GROUND
2	E2 18OR	PANEL LAMPS FEED

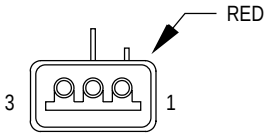

ASH RECEIVER LAMP (RHD)

CAV	CIRCUIT	FUNCTION
1	E2 18OR	PANEL LAMPS FEED
2	-	-
3	Z1 18BK	GROUND

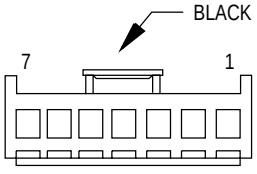

AUTOMATIC DAY/NIGHT MIRROR

CAV	CIRCUIT	FUNCTION
1	V23 18BR/PK	FUSED IGNITION (ST-RUN)
2	Z1 20BK	GROUND
3	L1 20VT/BK	BACK-UP LAMP FEED
4	P112 20YL/WT*	POWER MIRROR B(-)
5	P114 20YL/BK*	POWER MIRROR B(-)
6	-	-
7	L24 20WT/LG*	AUTOMATIC HEADLAMP SIGNAL

* EXCEPT BUILT-UP-EXPORT

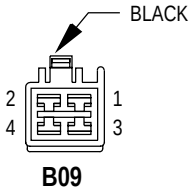

B09

CAV	CIRCUIT
1	Z1 12BK
2	F35 14RD
3	A2 12PK/BK
4	F20 20WT

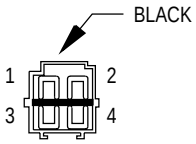

HS5D

CAV	CIRCUIT
1	Z1 14BK
	Z1 14BK
2	F35 14RD
	F35 14RD
3	A2 12PK/BK
4	F20 20WT

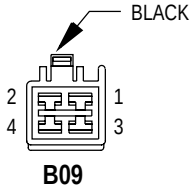

B09

CAV	CIRCUIT
1	Z1 12BK
2	A2 12PK/BK
3	F35 14RD
4	F20 20WT

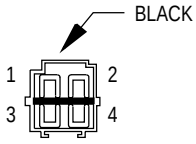

S02

CAV	CIRCUIT
1	Z1 14BK
	Z1 20BK
2	A2 12PK/BK
3	F35 14RD
4	-

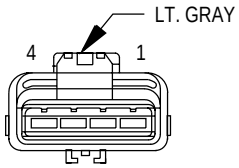

B13

CAV	CIRCUIT
1	Z1 14BK
2	L1 20VT/BK
3	G4 18DB
4	A141 16DG/WT

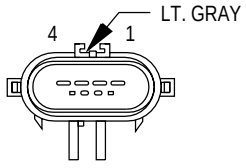

AW4

CAV	CIRCUIT
1	Z1 16BK
2	L1 20VT/BK
3	G4 18DB
4	A141 16DG/WT

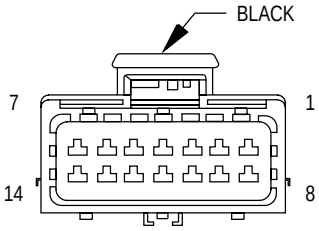

B17

CAV	CIRCUIT
1	-
2	L50 18WT/TN
3	M11 20PK/LB
4	G78 18TN/BK
5	L77 20BR/LB
6	P98 20WT/RD
7	V13 18BR/LG
8	V23 18BR/PK
9	F133 20BR/RD
10	F136 20VT/WT
11	Z1 12BK
12	C15 12BK/WT

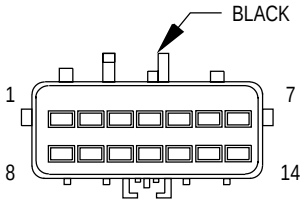

LJ01

CAV	CIRCUIT
1	-
2	L50 20WT/TN
3	M11 20PK/LB
4	G78 18TN/BK
5	L77 20BR/LB
6	P98 20WT/RD
7	V13 18BR/LG
8	V23 18BR/PK
9	F133 20BR/RD
10	F136 20VT/WT
11	Z1 12BK
12	C15 12BK/WT

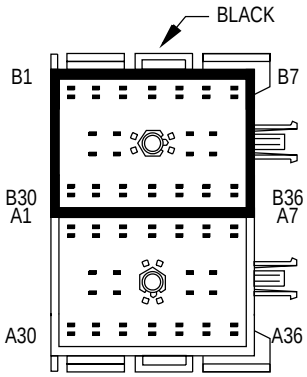

B23

CAV	CIRCUIT
B1	V16 20WT
B2	X153 20WT/BR
B3	L39 18LB ●
B3	L44 20VT/RD ●●
B3	L44 20VT/RD ●●
B4	A1 12RD
B5	M20 20BR
B5	M20 20BR
B6	X154 20WT/VT
B7	P70 20WT*
B8	P71 20YL*
B9	P72 20YL/BK*
B10	P73 20YL/PK*
B11	P74 20DB*
B12	D1 18VT/BR
B13	D2 18WT/BK
B14	D6 20PK/LB*
B15	P75 20DB/WT*
B16	D20 20LG*
B17	D21 20PK
B18	L34 20RD/OR
B19	Z39 20BK
B19	Z39 20BK ●●
B20	L94 20OR/WT
B21	L324 20WT/LG
B22	M13 20BK/YL
B23	F14 18LG/YL ●●
B23	F14 20LG/YL ●
B24	F23 18DB/YL ●●
B24	F23 20DB/YL ●
B25	X155 20BR/WT
B26	X156 20VT/WT
B27	L36 20LG●●
B27	L36 20LG●●
B28	L77 18BR/YL ●●
B29	F39 18PK/LG*
B29	F39 18PK/LG*
B30	C104 12RD/WT
B31	C107 12TN/BK
B32	C4 16TN
B33	C6 14LB
B34	C5 16LG
B35	C71 12DB
B36	C103 20DG/LB

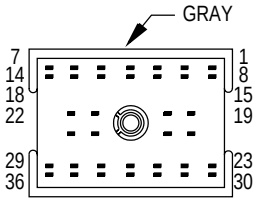

P18

CAV	CIRCUIT
1	V16 20WT
2	X153 20WT/BR
3	L39 18LB ●
3	L44 20VT/RD ●●
4	A1 12RD
5	M20 20BR
6	X154 20WT/VT
7	P70 20WT*
7	P70 20WT**
8	P71 20YL*
8	P71 20YL**
9	P72 20YL/BK*
9	P72 20YL/BK**
10	P73 20YL/PK*
10	P73 20YL/PK**
11	P74 20DB*
11	P74 20DB**
12	D1 20VT/BR
13	D2 20WT/BK
14	D6 20PK/LB*
15	P75 20DB/WT*
15	P75 20DB/WT**
16	D20 20LG*
17	D21 20PK
18	L34 20RD/OR
19	Z39 18BK
20	L94 20OR/WT
21	L324 22WT/LG
22	M13 20BK/YL
23	F14 18LG/YL
24	F23 18DB/YL
25	X155 20BR/WT
26	X156 20VT/WT
27	L36 20LG●●
28	L77 18BR/YL ●●
29	-
30	C104 12RD/WT
31	C107 12TN/BK
32	C4 16TN
33	C6 14LB
34	C5 16LG
35	C71 12DB
36	C103 20DG/LB

* GAS
** GAS/MEMORY OPTIONS
● GAS, EXCEPT BUILT-UP-EXPORT
●● BUILT-UP-EXPORT

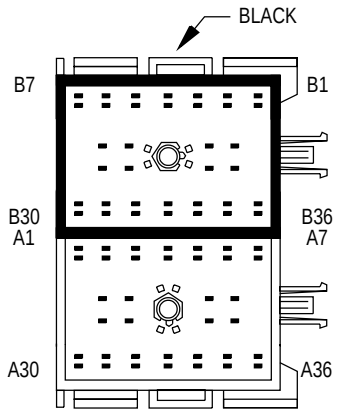

B23

CAV	CIRCUIT
A1	B27 20RD/YL ●
A1	B27 18RD/YL ●●
A2	G3 20BK/PK ●
A2	G3 18BK/PK ■■
A3	G19 18LG/OR
A4	K29 20WT/PK ▲
A5	-
A6	-
A7	X57 20BR/LB
A8	X58 20DB/OR
A9	X51 20BR/YL
A10	X52 20DB/WT
A11	X15 16BK/DG
A12	X53 20DG
A13	X54 20VT
A14	X55 20BR/RD
A15	X56 20DB/RD
A16	L13 20BR/YL ●●
	L13 18BR/YL ●●
A17	V32 20YL/RD ▲
A17	G85 20OR/BK ▲▲
A18	V30 20DB/RD ▲
A18	P114 20YL/BK ●
A19	L50 18WT/TN ▲
A20	F32 18PK/DB ▲
A20	P112 20YL/WT ●
A21	V37 20RD/LG
A22	F30 16RD
	F30 16RD
A23	G96 20LG/RD** ●
	G96 20LG/RD** ●
A23	G96 20LG/RD** ▲
A24	Z11 20BK/WT
A25	P66 20WT/BK** ■
A26	P65 20DB/YL** ■
A27	P64 20YL/OR** ■
A28	P69 20WT/RD** ■
A29	P68 20DG/RD** ■
A30	P67 20YL/RD** ■
A31	C50 12BK/LG*
A32	-
A33	C60 16BK/LB*
	C60 16BK/LB*
A34	C34 20DB/WT*
A34	C63 20LB* ●
A35	C70 12DG*
A36	C61 20DB*

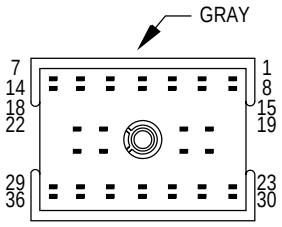

P34

CAV	CIRCUIT
1	B27 20RD/YL
2	G3 20BK/PK
3	G19 20LG/OR
	G19 20LG/OR
4	K29 20WT/PK ▲
5	-
6	-
7	X57 20BR/LB
8	X58 20DB/OR
9	X51 20BR/YL
10	X52 20DB/WT
11	X15 16BK/DG
12	X53 20DG
	X53 20DG*
13	X54 20VT
	X54 20VT*
14	X55 20BR/RD
	X55 20BR/RD*
15	X56 20DB/RD
	X56 20DB/RD*
16	L13 20BR/YL ●●
17	V32 20YL/RD ▲
17	G85 20OR/BK ▲▲
18	V30 20DB/RD ▲
18	P114 20YL/BK ●
19	L50 18WT/TN ▲
20	F32 18PK/DB ▲
20	P112 20YL/WT ●
21	V37 20RD/LG
22	F30 16RD
23	G96 20LG/RD ●
	G96 20LG/RD ●
24	Z11 20BK/WT
25	P66 20WT/BK ■
26	P65 20DB/YL ■
27	P64 20YL/OR ■
28	P69 20WT/RD ■
29	P68 20DG/RD ■
30	P67 20YL/RD ■
31	C50 12BK/LG*
32	- ■
33	C60 16BK/LB*
34	C34 20DB/WT*
34	C63 22LB ●
35	C70 12DG*
36	C61 20DB*

* REAR A/C HEATER
** MEMORY SEAT
● EXCEPT BUILT-UP-EXPORT
●● BUILT-UP-EXPORT
▲ RHD
▲▲ DIESEL
■ GAS
■■ GAS,BUILT-UP-EXPORT

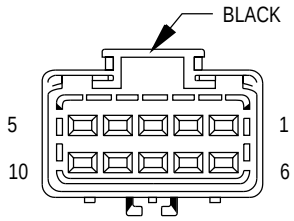

B33
(DIESEL)

CAV	CIRCUIT
1	G6 20GY
2	G18 20PK/BK
3	G58 20BK/YL
4	A141 16DG/WT
5	F20 20WT
6	K21 20BK/RD
7	K1 20DG/RD
8	K9 20LB
9	K3 20BK/VT
10	L1 20VT/BK

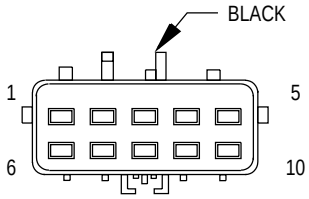

E120
(DIESEL)

CAV	CIRCUIT
1	G6 16GY
2	G18 20BK/PK
3	G58 20BK/YL
4	A141 18DG/WT
5	F20 20WT
6	K21 18BK/RD
7	K1 18DG/RD
8	K9 18LB
9	K3 20BK/VT
10	L1 18VT/BK

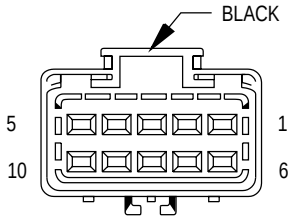

B33
(GAS)

CAV	CIRCUIT
1	K4 20BK/LB
2	D2 18WT/BK
3	D20 20LG
4	D21 20PK
5	F20 20WT
6	D6 20PK/LB
7	D1 18VT/BR
8	F11 20RD/WT
9	G6 20GY
10	L1 20VT/BK

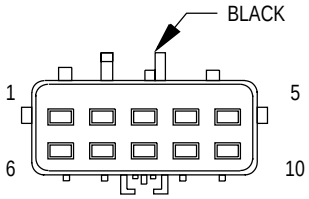

E36
(GAS)

CAV	CIRCUIT
1	K4 18BK/LB
2	D2 18WT/BK
3	D20 18LG
4	D21 18PK
5	F20 18WT
6	D6 18PK/LB
7	D1 18VT/BR
8	F11 18RD/WT
9	G6 16GY
10	L1 18VT/BK

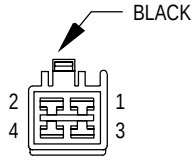

B56

CAV	CIRCUIT
1	Z1 12BK
2	F35 14RD
3	-
4	F20 20WT

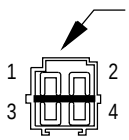

HS5P

CAV	CIRCUIT
1	Z1 14BK
2	F35 14RD
	F35 14RD
3	-
4	F20 20WT

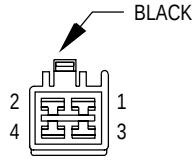

B56

CAV	CIRCUIT
1	Z1 12BK
2	A2 12PK/BK
3	F35 14RD
4	F20 20WT

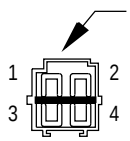

S02

CAV	CIRCUIT
1	Z1 14BK
	Z1 20BK*
2	A2 12PK/BK
3	F35 14RD
4	F20 20WT

* MEMORY

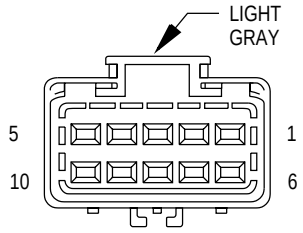

B70

CAV	CIRCUIT
1	C103 20DG/LB
2	A142 18DG/OR
3	V32 20YL/RD
4	-
5	G3 20BK/PK
6	V30 20DB/RD
7	K29 20WT/PK
8	V37 20RD/LG
9	Z11 20BK/WT
10	K141 20TN/WT

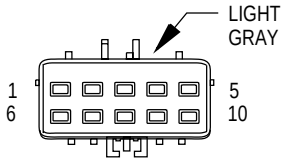

E43

CAV	CIRCUIT
1	C103 18DG/LB
2	A142 18DG/OR
3	V32 18YL/RD
4	-
5	G3 18BK/PK
6	V30 18DB/RD
7	K29 18WT/PK
8	V37 18RD/LG
9	Z11 18BK/WT
10	K141 18TN/WT

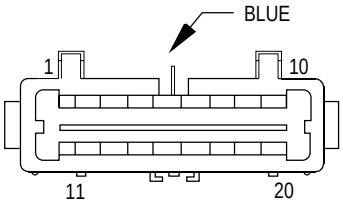

B75

CAV	CIRCUIT
1	M20 20BR
2	F41 20PK/VT
3	M13 20BK/YL
4	M113 20LB/PK
5	D2 18WT/BK
6	D1 18VT/BR
7	G10 18LG/RD*
8	G32 20BK/LB
9	Z2 18BK/LG
10	G31 20VT/LG
11	V23 18BR/PK
12	Z1 20BK
13	L1 20VT/BK
14	G74 18TN/RD
14	G75 18TN*
15	F133 20BR/YL
16	F136 20VT/YL
17	E2 20OR
18	L24 20WT/LG**
19	P112 20YL/WT**
20	P114 20YL/BK**

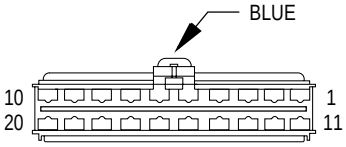

C20

CAV	CIRCUIT
1	M20 20BR
2	F41 20PK/VT
3	M13 20BK/YL
4	M113 20LB/PK
5	D2 18WT/BK
6	D1 18VT/BR
7	G10 18LG/RD*
8	G32 20BK/LB
9	Z2 18BK/LG
10	G31 20VT/LG
11	V23 18BR/PK
12	Z1 20BK
13	L1 20VT/BK
14	G74 18TN/RD
15	F133 20BR/YL
16	F136 20VT/YL
17	E2 18OR
18	L24 20WT/LG**
19	P112 20YL/WT**
20	P114 20YL/BK**

* RHD
** EXCEPT BUILT-UP-EXPORT

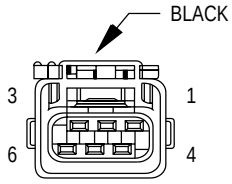

B98
(TRAILER TOW)

CAV	CIRCUIT
1	L62 18BR/RD
2	-
3	L1 20VT/BK
4	L78 20DG/YL
5	L50 18WT/TN
6	Z1 20BK

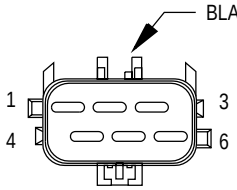

T08

CAV	CIRCUIT
1	L62 18BR/RD
	L62 18BR/RD
2	-
3	L1 20VT/BK
4	L78 20DG/YL
	L78 18BR
5	L50 18WT/TN
6	Z1 20BK
	Z1 18WT

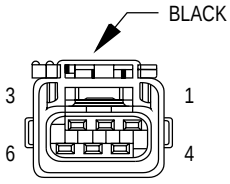

B99
(TRAILER TOW)

CAV	CIRCUIT
1	L63 18DG/RD
2	-
3	L1 20VT/BK
4	L77 20BR/LB
5	L50 18WT/TN
6	Z1 20BK

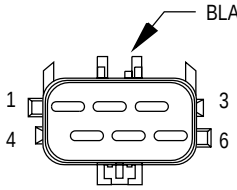

T05

CAV	CIRCUIT
1	L63 18DG/RD
	L63 18DG/RD
2	-
3	L1 20VT/BK
4	L77 20BR/LB
5	L50 18WT/TN
	L50 18WT/TN
6	Z1 20BK
	Z1 18BK

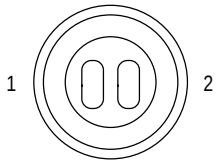

BACK-UP
SWITCH

CAV	CIRCUIT	FUNCTION
1	F20 18WT	FUSED IGNITION SWITCH OUTPUT
1	F20 20WT*	FUSED IGNITION SWITCH OUTPUT
2	L1 18VT/BK	BACK-UP LAMP FEED

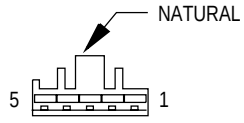

BLEND
DOOR ACTUATOR

CAV	CIRCUIT	FUNCTION
1	C33 20DB/RD	BLEND AIR DOOR DRIVER
2	C26 20PK/DB	5 VOLT SUPPLY
3	C36 20RD/WT	BLEND DOOR FEEDBACK SIGNAL
4	C57 20DB/GY	SENSOR GROUND
5	C34 20DB/WT	BLEND AIR DOOR DRIVER

* DIESEL

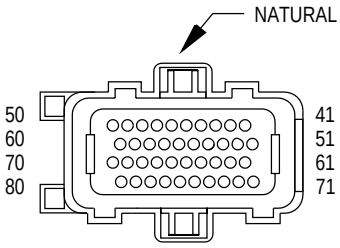

BODY CONTROL MODULE - C1

CAV	CIRCUIT	FUNCTION
41	V7 20DG/WT	WIPER PARK SWITCH SENSE
42	G7 18WT/OR*	VEHICLE SPEED SENSOR SIGNAL
43	G70 18BR/TN	HOOD AJAR SWITCH SENSE
44	P98 20WT/RD	LIFTGATE LOCK/UNLOCK MUX
45	P97 20WT/DG	DRIVER DOOR SWITCH MUX
46	G4 18DB	FUEL LEVEL SENSOR SIGNAL
47	G77 18TN/OR	LEFT REAR DOOR AJAR SWITCH SENSE
48	G74 18TN/RD	PASSENGER DOOR AJAR SWITCH SENSE
49	V13 18BR/LG	REAR WIPER MOTOR CONTROL
50	V20 20BK/WT	REAR WASHER MOTOR CONTROL
51	L24 20WT/LG**	AUTOMATIC HEADLAMP SIGNAL
52	G6 20GY	ENGINE OIL PRESSURE SWITCH SENSE
53	-	-
54	-	-
55	P96 20WT/LG	PASSENGER DOOR SWITCH MUX
56	V38 20LB/RD*	SPEED CONTROL LAMP DRIVER
57	G18 20PK/BK*	COOLANT LEVEL SWITCH SENSE
58	G29 20BK/TN	WASHER FLUID SWITCH SENSE
59	G78 18TN/BK	LIFTGATE AJAR SWITCH SENSE
60	G58 20BK/YL*	ENGINE COOLANT TEMPERATURE SENSOR SIGNAL
61	-	-
62	-	-
63	-	-
64	-	-
65	-	-
66	-	-
67	-	-
68	-	-
69	-	-
70	-	-
71	P171 20VT/WT ●	POWER MIRROR FOLD RELAY
72	G55 20OR/BK*	ENGINE DISABLE SIGNAL
73	V14 18RD/VT	WIPER ON/OFF RELAY CONTROL
74	P174 20YL/RD ●	POWER MIRROR UNFOLD RELAY
75	K159 20VT/RD*	ENGINE SPEED SENSOR SIGNAL
76	L193 20OR/WT**	LOW BEAM RELAY CONTROL
77	G76 18TN/YL	RIGHT REAR DOOR AJAR SWITCH SENSE
78	G10 18LG/RD	SEAT BELT SWITCH SENSE
79	G75 18TN	DRIVER DOOR AJAR SWITCH SENSE
80	M20 20BR	COURTESY LAMP GROUND

* DIESEL
** GAS
● BUILT-UP-EXPORT

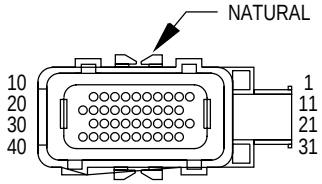

BODY CONTROL MODULE - C2

CAV	CIRCUIT	FUNCTION
1	G96 20LG/RD	RKE INTERFACE
2	M32 22BK/LB	COURTESY LAMP SWITCH SENSE
3	D1 20VT/BR	CCD BUS(+)
4	G26 20LB	KEY-IN IGNITION SWITCH SENSE
5	-	-
6	G2 22VT	ENGINE TEMPERATURE WARNING LAMP DRIVER
7	V52 20DG/YL	FRONT WIPER SWITCH MUX
8	E92 22OR/BK	DIMMER SWITCH SIGNAL
9	Z20 20BK/WT**	GROUND
10	Z2 20BK/LG	GROUND
11	E17 20YL/BK	STEP DIMMER SWITCH SENSE
12	L110 22BK/YL ●	AUTO HEADLAMP SWITCH SENSE
13	L307 20LG/OR	HEADLAMP SWITCH SENSE
14	Z2 20BK/LG	GROUND
15	-	-
16	G69 22BK/OR	VTSS LAMP DRIVER
17	G19 20LG/OR	ABS WARNING LAMP DRIVER
18	-	-
19	-	-
20	X3 20BK/RD	HORN RELAY CONTROL
21	-	-
22	-	-
23	-	-
24	-	-
25	-	-
26	-	-
27	-	-
28	-	-
29	-	-
30	-	-
31	-	-
32	-	-
33	G6 22GY	ENGINE OIL PRESSURE SWITCH SENSE
34	D2 20WT/BK	CCD BUS(-)
35	-	-
36	-	-
37	D9 22GY/BK	RKE MODULE PROGRAM ENABLE
38	V26 22YL/WT	REAR WIPER SWITCH MUX
39	P136 20YL	POWER FOLDING MIRROR SWITCH SIGNAL
40	L308 20LG/WT	PARK LAMP SWITCH SENSE

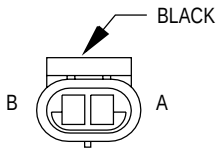

BRAKE PRESSURE SWITCH

CAV	CIRCUIT	FUNCTION
A	G9 20GY/BK	RED BRAKE WARNING LAMP DRIVER
B	Z1 20BK	GROUND

* BUILT-UP-EXPORT
** EXCEPT BUILT-UP-EXPORT
● GAS

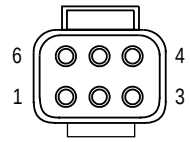

C19

CAV	CIRCUIT
1	V23 18BRPK
2	Z1 20BK
3	L1 20VT/BK
4	P112 20YL/WT*
5	P114 20YL/BK*
6	L24 20WT/LG*

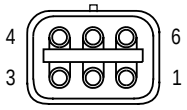

EC1

CAV	CIRCUIT
1	V23 18BRPK
2	Z1 20BK
3	L1 20VT/BK
4	P112 20YL/WT*
5	P114 20YL/BK*
6	L24 20WT/LG*

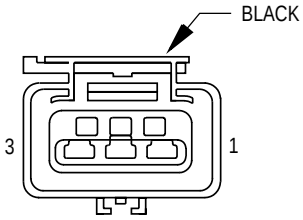

CAMSHAFT POSITION SENSOR

CAV	CIRCUIT	FUNCTION
1	K7 18OR	8 VOLT SUPPLY
2	K4 18BK/LB	SENSOR GROUND
3	K44 18TN/YL	CAMSHAFT POSITION SENSOR SIGNAL

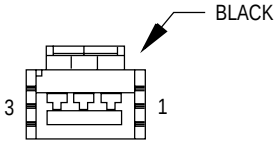

CENTER DOME LAMP

CAV	CIRCUIT	FUNCTION
1	-	-
2	M113 20LB/PK	CENTER DOME LAMP FEED
3	M20 20BR	CENTER DOME LAMP GROUND

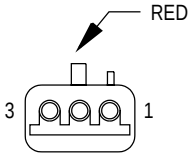

CENTER HIGH MOUNTED STOP LAMP

CAV	CIRCUIT	FUNCTION
1	Z1 20BK	GROUND
2	-	-
3	L50 20WT/TN	STOP LAMP SWITCH OUTPUT

* EXCEPT BUILT-UP-EXPORT

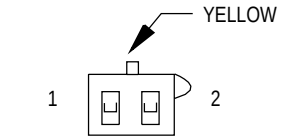

CLOCKSPRING - C1

CAV	CIRCUIT	FUNCTION
1	R43 18BK/LB	DRIVER AIRBAG LINE NO.1
2	R45 18DG/LB	DRIVER AIRBAG LINE NO.2

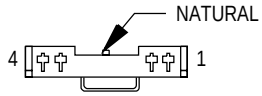

CLOCKSPRING - C2

CAV	CIRCUIT	FUNCTION
1	X3 20BK/RD	HORN RELAY DRIVER
2	-	-
3	Z2 20BK/LG	GROUND
4	V37 20RD/LG	SPEED CONTROL SWITCH SIGNAL

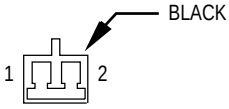

CLUTCH INTERLOCK SWITCH (MTX)

CAV	CIRCUIT	FUNCTION
1	F45 20YL/RD	FUSED B(+) ENGINE STARTER MOTOR RELAY
2	T141 20YL/RD	IGNITION SWITCH OUTPUT (START)

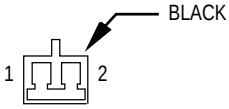

CLUTCH INTERLOCK SWITCH JUMPER (EATX)

CAV	CIRCUIT	FUNCTION
1	T141 20YL/RD	IGNITION SWITCH OUTPUT (START)
2	T141 20YL/RD	IGNITION SWITCH OUTPUT (START)

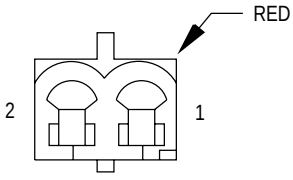

CLUTCH SWITCH (DIESEL)

CAV	CIRCUIT	FUNCTION
1	K119 20LG/BK	CLUTCH SWITCH
2	Z1 20BK	GROUND

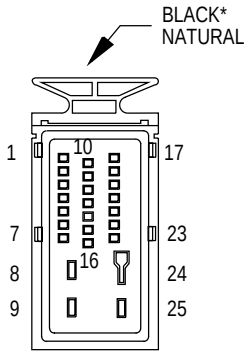

CONTROLLER ANTI-LOCK BRAKE

CAV	CIRCUIT	FUNCTION
1	B1 18YL/DB	RIGHT REAR WHEEL SPEED SENSOR (-)
2	B3 18LG/DB	LEFT REAR WHEEL SPEED SENSOR (-)
3	B7 18WT	RIGHT FRONT WHEEL SPEED SENSOR (+)
4	B9 18RD	LEFT FRONT WHEEL SPEED SENSOR (+)
5	-	-
6	-	-
7	-	-
8	Z7 12BK	GROUND
9	A20 12RD/DB	FUSED B(+)
10	B4 18LG	LEFT REAR WHEEL SPEED SENSOR (+)
11	B8 18RD/DB	LEFT FRONT WHEEL SPEED SENSOR (-)
12	L50 18WT/TN	STOP LAMP SWITCH SENSE
13	-	-
14	-	-
15	-	-
16	G19 18LG/OR	ABS WARNING LAMP DRIVER
17	B2 18YL	RIGHT REAR WHEEL SPEED SENSOR (+)
18	B6 18WT/DB	RIGHT FRONT WHEEL SPEED SENSOR (-)
19	D2 18WT/BK	CCD BUS (-)
20	D1 18VT/BR	CCD BUS (+)
21	-	-
22	B27 18RD/YL	TRACTION CONTROL SWITCH SENSE
23	F20 18WT	FUSED IGNITION (RUN)
24	Z7 12BK	GROUND
25	A10 12RD/DG	FUSED B(+)

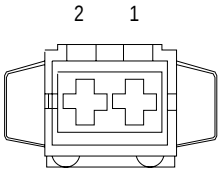

CRANK CASE HEATER (DIESEL)

CAV	CIRCUIT	FUNCTION
1	A141 18DG/WT	FUEL PUMP RELAY OUTPUT
2	Z1 18BK	GROUND

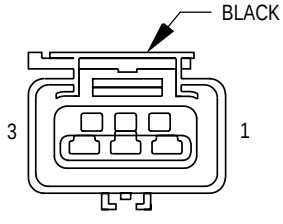

CRANKSHAFT POSITION SENSOR

CAV	CIRCUIT	FUNCTION
1	K7 18OR	8 VOLT SUPPLY
2	K4 18BK/LB	SENSOR GROUND
3	K24 18GY/BK	CRANKSHAFT POSITION SENSOR SIGNAL

* DIESEL

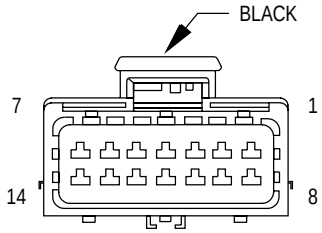

D01D

CAV	CIRCUIT
1	Q13 18DB
2	Q14 18GY
3	Z2 20BK/LG
4	E2 20OR
5	F131 20BK/PK
6	Q26 14VT/RD
7	F55 14TN/DG
8	Q23 18RD/WT
9	Q16 14BR/WT
10	Z1 12BK
11	P97 20WT/DG
12	F133 20BR
13	Q24 18DG
14	F21 16TN

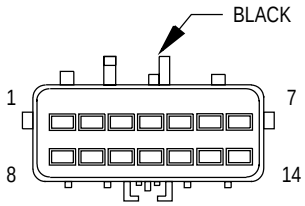

B02

CAV	CIRCUIT
1	Q13 18DB
2	Q14 18GY
3	Z2 20BK/LG
4	E2 20OR
5	F131 20BK/PK
6	Q26 12VT/RD
7	F55 12TN/DG
8	Q23 18RD/WT
9	Q16 12BR/WT
10	Z1 12BK
11	P97 20WT/DG
12	F133 20BR
13	Q24 18DG
14	F21 16TN

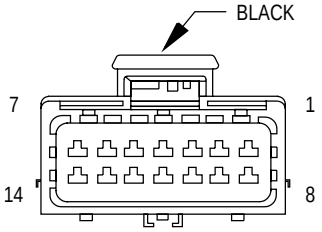

D01P

CAV	CIRCUIT
1	X15 16BK/DG
2	Q26 12VT/RD
3	Z2 20BK/LG
4	P96 20WT/LG
5	Z1 20BK
6	M11 20PK/LB
7	X56 20DB/RD*
7	X55 20BR/RD**
8	X54 20VT*
8	X53 20DG**
9	F136 20VT/YL
10	F133 20BR
11	E2 20OR
12	F55 12TN/DG
13	Q16 12BR/WT
14	X13 16RD/DG

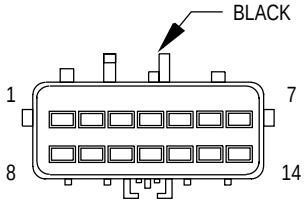

B03

CAV	CIRCUIT
1	X15 16BK/DG
2	Q26 12VT/RD
3	Z2 20BK/LG
4	P96 20WT/LG
5	Z1 18BK
6	M11 20PK/LB
7	X56 20DB/RD*
7	X55 20BR/RD**
8	X54 20VT*
8	X53 20DG**
9	F136 20VT/YL
10	F133 20BR
11	E2 20OR
12	F55 12TN/DG
13	Q16 12BR/WT
14	X13 16RD/DG

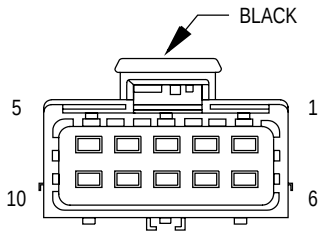

D02

CAV	CIRCUIT
1	X15 16BK/DG
2	X13 16RD/DG
3	M11 20PK/LB
4	P22 20PK/BK
5	X153 20WT/BR*
5	X154 20WT/VT**
6	P23 20PK/RD
7	P24 20PK/WT
8	X55 20BR/RD*
8	X56 20DB/RD**
9	X53 20DG*
9	X54 20VT**
10	X155 20BR/WT*
10	X156 20VT/WT**

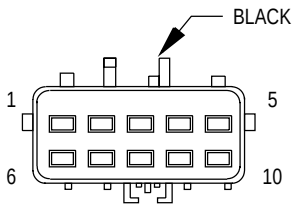

B01

CAV	CIRCUIT
1	X15 16BK/DG
2	X13 16RD/DG
3	M11 20PK/LB
4	P22 20PK/BK
5	X153 20WT/BR*
5	X154 20WT/VT**
6	P23 20PK/RD
7	P24 20PK/WT
8	X55 20BR/RD*
8	X56 20DB/RD**
9	X53 20DG*
9	X54 20VT**
10	X155 20BR/WT*
10	X156 20VT/WT**

* LHD
** RHD

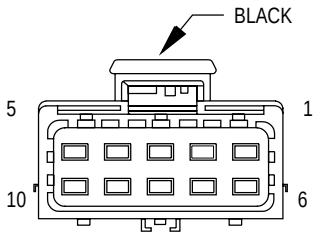

D02
(LHD)

CAV	CIRCUIT
1	-
2	-
3	X154 20WT/VT
4	-
5	-
6	-
7	X156 20VT/WT
8	-
9	-
10	-

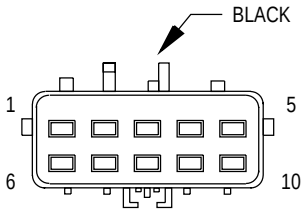

B120
(LHD)

CAV	CIRCUIT
1	-
2	-
3	X154 20WT/VT
4	-
5	-
6	-
7	X156 20VT/WT
8	-
9	-
10	-

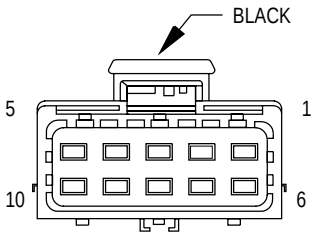

D02
(RHD)

CAV	CIRCUIT
1	-
2	-
3	X153 20WT/BR
4	-
5	-
6	-
7	X155 20BR/WT
8	-
9	-
10	-

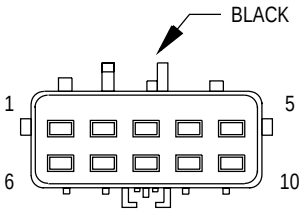

B120
(RHD)

CAV	CIRCUIT
1	-
2	-
3	X153 20WT/BR
4	-
5	-
6	-
7	X155 20BR/WT
8	-
9	-
10	-

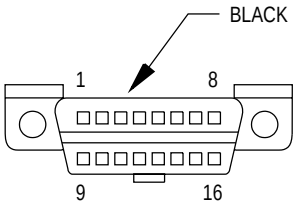

DATA LINK CONNECTOR

CAV	CIRCUIT	FUNCTION
1	-	-
2	-	-
3	D1 20VT/BR	CCD BUS(+)
4	Z2 20BK/LG	GROUND
5	Z11 20BK/WT	GROUND
6	D20 20LG	SCI RECEIVE
7	D21 20PK	SCI TRANSMIT
8	-	-
9	-	-
10	-	-
11	D2 20WT/BK	CCD BUS(-)
12	-	-
13	-	-
14	D6 20PK/LB	SCI RECEIVE (EATX)
15	-	-
16	M1 20PK	FUSED B(+)

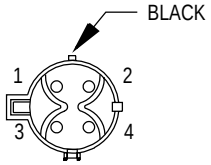

DOWNSTREAM HEATED OXYGEN SENSOR

CAV	CIRCUIT	FUNCTION
1	Z12 20BK/TN	GROUND
2	A142 18DG/OR	AUTOMATIC SHUT DOWN RELAY OUTPUT
3	K4 20BK/LB	SENSOR GROUND
4	K141 20TN/WT	HEATED OXYGEN SENSOR 1/2 SIGNAL

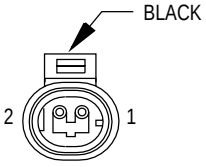

DRIVER DOOR ARM/DISARM SWITCH

CAV	CIRCUIT	FUNCTION
1	Z2 20BK/LG	GROUND
2	P97 20WT/DG	DRIVER DOOR SWITCH MUX

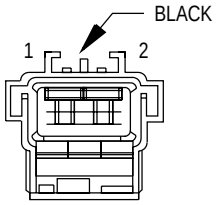

DRIVER DOOR COURTESY LAMP

CAV	CIRCUIT	FUNCTION
1	M11 20PK/LB	COURTESY LAMP RELAY OUTPUT
2	Z1 20BK	GROUND

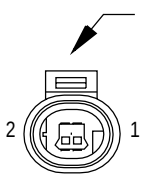

DRIVER DOOR LOCK MOTOR

CAV	CIRCUIT	FUNCTION
1	F131 20BK/PK	LEFT FRONT UNLOCK RELAY OUTPUT
2	F133 20BR	LOCK RELAY OUTPUT

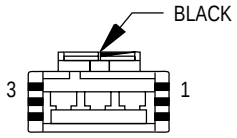

DRIVER DOOR LOCK SWITCH

CAV	CIRCUIT	FUNCTION
1	E2 20OR	PANEL LAMPS FEED
	E2 20OR	
2	P97 20WT/DG	DRIVER DOOR SWITCH MUX
	P97 20WT/DG*	
3	Z2 20BK/LG	GROUND
	Z2 20BK/LG*	

DRIVER HEATED SEAT BACK

CAV	CIRCUIT	FUNCTION
A	P88 18RD/WT	HEATED SEAT DRIVER
B	Z1 18BK	GROUND

DRIVER HEATED SEAT CUSHION

CAV	CIRCUIT	FUNCTION
A	P87 18RD/WT	HEATED SEAT DRIVER
B	P88 18RD/WT	HEATED SEAT DRIVER
C	P89 20BK/RD	HEATED SEAT BACK
D	Z1 18BK	GROUND

DRIVER HEATED SEAT MODULE

CAV	CIRCUIT	FUNCTION
A	P87 18RD/WT	DRIVER HEATED SEAT SWITCH
B	P86 20VT	HEATED SEAT TEMPERATURE SENSOR
C	P7 20WT/BK	DRIVER HEATED SEAT SWITCH
D	F35 18RD	FUSED B(+)
E	P89 20BK/RD	HEATED SEAT BACK
F	Z1 18BK	GROUND

* RKE

DRIVER HEATED SEAT SWITCH

CAV	CIRCUIT	FUNCTION
A	P86 20VT	HEATED SEAT TEMPERATURE SENSOR
B	F20 20WT	FUSED IGNITION (RUN)
C	-	-
D	F20 20WT	FUSED IGNITION (RUN)
E	Z1 18BK	GROUND
F	P7 20WT/BK	DRIVER HEATED SEAT BACK

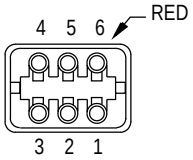

DRIVER POWER MIRROR - C1

CAV	CIRCUIT	FUNCTION
1	P75 20DB/WT	DRIVER POWER MIRROR UP
2	P71 20YL	DRIVER POWER MIRROR LEFT
3	P73 20YL/PK	DRIVER POWER MIRROR RIGHT/DOWN
4	C16 20LB/YL	REAR DEFOGGER LAMP DRIVER
5	Z1 20BK	GROUND
6	P112 20YL/WT	POWER MIRROR B(-)

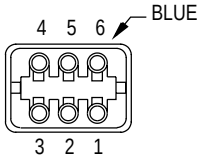

DRIVER POWER MIRROR - C2

CAV	CIRCUIT	FUNCTION
1	P64 20YL/OR	DRIVER POWER MIRROR UP/DOWN
2	P69 20WT/RD	DRIVER POWER MIRROR RETURN
3	P65 20DB/YL	DRIVER POWER MIRROR LEFT/RIGHT
4	P114 20YL/BK**	POWER MIRROR B(-)
5	P159 20DG*	DRIVER POWER MIRROR UNFOLD
6	P160 20LB*	DRIVER POWER MIRROR FOLD

* BUILT-UP-EXPORT
** EXCEPT BUILT-UP-EXPORT

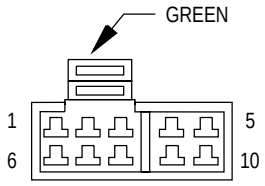

DRIVER POWER SEAT SWITCH

CAV	CIRCUIT	FUNCTION
1	Z1 14BK	GROUND
2	P43 14GY/LB	DRIVER SEAT RECLINER SWITCH DOWN
3	P17 14RD/LB	DRIVER POWER SEAT HORIZONTAL REARWARD
4	P41 14GY/WT	DRIVER SEAT RECLINER SWITCH UP
5	F35 14RD	FUSED B(+)
6	P15 14YL/LB	DRIVER POWER SEAT HORIZONTAL FORWARD
7	P19 14YL/LG	DRIVER POWER SEAT FRONT UP
8	P11 14YL/WT	DRIVER POWER SEAT REAR UP
9	P13 14RD/WT	DRIVER POWER SEAT REAR DOWN
10	P21 14RD/LG	DRIVER POWER SEAT FRONT DOWN

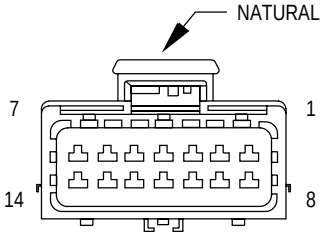

DRIVER POWER WINDOW SWITCH

CAV	CIRCUIT	FUNCTION
1	Q24 18DG	POWER WINDOW RIGHT REAR B(+) DOWN
2	Q26 14VT/WT	MASTER WINDOW SWITCH RIGHT FRONT DOWN
3	Q13 18DB	POWER WINDOW LEFT REAR B(+) UP
4	Q16 14BR/WT	MASTER WINDOW SWITCH RIGHT FRONT UP
5	Q14 18GY	POWER WINDOW RIGHT REAR B(+) UP
6	Q21 16WT	LEFT FRONT WINDOW DRIVER (DOWN)
7	Q23 18RD/WT	POWER WINDOW LEFT REAR B(+) DOWN
8	Q11 16LG	LEFT WINDOW DRIVER (UP)
9	F55 14TN/DG	FUSED B(+)
10	-	-
11	F21 16TN	FUSED IGNITION SWITCH OUTPUT (RUN/ACC)
12	-	-
13	Z1 12BK	GROUND
14	E2 20OR	PANEL LAMPS FEED

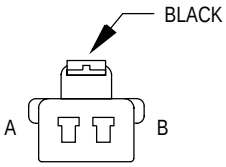

DRIVER SEAT FRONT VERTICAL MOTOR

CAV	CIRCUIT	FUNCTION
A	P21 14RD/LG	DRIVER POWER SEAT FRONT DOWN
B	P19 14YL/LG	DRIVER POWER SEAT FRONT UP

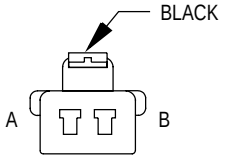

DRIVER SEAT HORIZONTAL MOTOR

CAV	CIRCUIT	FUNCTION
A	P15 14YL/LB	DRIVER POWER SEAT HORIZONTAL FORWARD
B	P17 14RD/LB	DRIVER POWER SEAT HORIZONTAL REARWARD

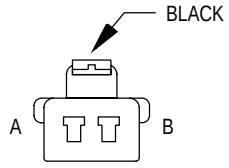

DRIVER SEAT REAR VERTICAL MOTOR

CAV	CIRCUIT	FUNCTION
A	P11 14YL/WT	DRIVER POWER SEAT REAR UP
B	P13 14RD/WT	DRIVER POWER SEAT REAR DOWN

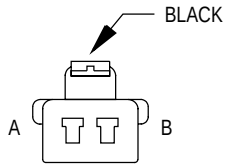

DRIVER SEAT RECLINER MOTOR

CAV	CIRCUIT	FUNCTION
A	P43 14GY/LB	DRIVER SEAT RECLINER SWITCH DOWN
B	P41 14GY/WT	DRIVER SEAT RECLINER SWITCH UP

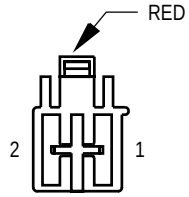

DRIVER WINDOW MOTOR

CAV	CIRCUIT	FUNCTION
1	Q11 16LG	DRIVER WINDOW (UP)
2	Q21 16WT	DRIVER WINDOW (DOWN)

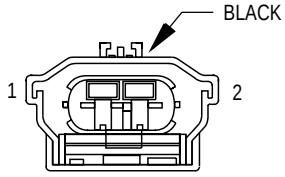

E40

CAV	CIRCUIT
1	C23 12DG
2	Z1 12BK

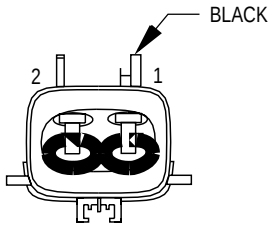

RF3

CAV	CIRCUIT
1	C23 12DG
2	Z1 12BK

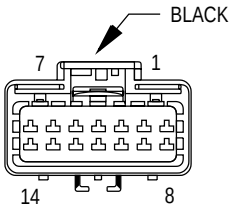

E69
(2.4L)

CAV	CIRCUIT
1	K11 18WT/DB
2	K12 18TN/WT
3	K13 18YL/WT
4	K14 18LB/BR
5	K4 18BK/LB
6	K70 18VT/RD
7	K52 18PK/BK
8	K6 18VT/WT
9	C18 18DB
10	A142 18DG/OR
11	K1 18DG/RD
12	K2 18TN/BK
13	-
14	-

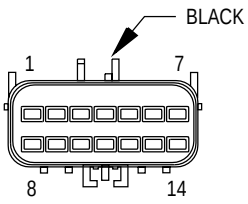

F09
(2.4L)

CAV	CIRCUIT
1	K11 18WT/DB
2	K12 18TN/WT
3	K13 18YL/WT
4	K14 18LB/BR
5	K4 18BK/LB
6	K70 18VT/RD
7	K52 18PK/BK
8	K6 18VT/WT
9	C18 18DB
10	A142 18DG/OR
11	K1 18DG/RD
12	K2 18TN/BK
13	-
14	-

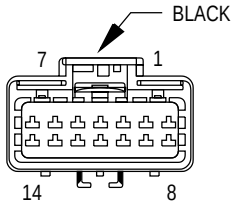

E78
(3.3L/3.8L)

CAV	CIRCUIT
1	A142 18DG/OR
2	K6 18VT/WT
3	K11 18WT/DB
4	K12 18TN/WT
5	K13 18YL/WT
6	K14 18LB/BR
7	K7 18OR
8	K44 18TN/YL
9	-
10	K1 18DG/RD
11	K2 18TN/BK
12	K38 18GY
13	K58 18BR/DB
14	K4 18BK/LB

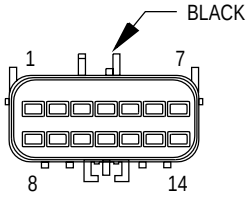

F02
(3.3L/3.8L)

CAV	CIRCUIT
1	A142 18DG/OR
2	K6 18VT/WT
3	K11 18WT/DB
4	K12 18TN/WT
5	K13 18YL/WT
6	K14 18LB/BR
7	K7 18OR
8	K44 18TN/YL
9	-
10	K1 18DG/RD
11	K2 18TN/BK
12	K38 18GY
13	K58 18BR/DB
14	K4 18BK/LB

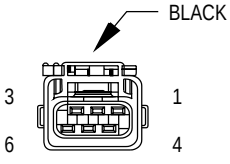

E95
(DIESEL)

CAV	CIRCUIT
1	C137 20YL
2	K57 20LG/OR
3	Z1 16BK
4	K153 18OR/DG
5	K152 20WT/DG
6	K90 18TN

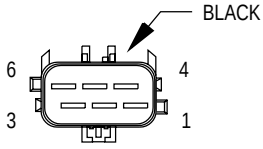

B107
(DIESEL)

CAV	CIRCUIT
1	C137 20YL
2	K57 20LG/OR
3	Z12 14BK/TN
4	K153 18OR/DG
5	K152 20WT/DG
6	K90 20OR/VT

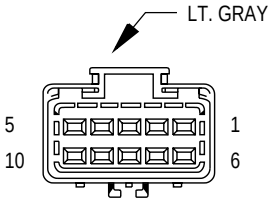

E96
(DIESEL)

CAV	CIRCUIT
1	A142 18DG/OR
2	K35 20GY/YL
3	K51 20DB/YL
4	G7 18WT/OR
5	K134 18LB/BK
6	K135 18WT/BK
7	A142 18DG/OR
8	K140 18TN/WT
9	K156 18GY
10	-

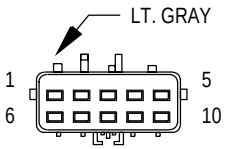

B108
(DIESEL)

CAV	CIRCUIT
1	A142 18DG/OR
2	K35 20GY/YL
3	K51 20DB/YL
4	G7 18WT/OR
5	K134 20LB/BK
6	K135 20WT/BK
7	A142 18DG/OR
8	K140 18TN/WT
9	K156 20GY
10	-

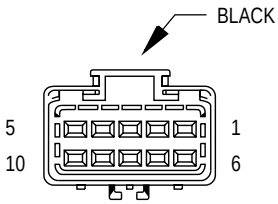

E97
(DIESEL)

CAV	CIRCUIT
1	K126 18LG
2	Z122 18BK
3	K67 18BR/BK
4	K68 18LG/YL
5	K24 20GY/BK
6	K4 20BK/LB
7	Z122 18BK
8	K2 20TN/BK
9	C13 20DB/OR
10	C24 20DB/PK

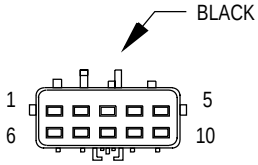

B106
(DIESEL)

CAV	CIRCUIT
1	K126 20LG
2	Z1 18BK
3	K67 20BR/BK
4	K68 20LG/YL
5	K24 18GY/BK
6	K4 18BK/LB
7	Z12 18BK Z1 18BK
8	K2 20TN/BK
9	C13 20DB/OR
10	C24 20DB/PK

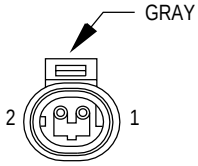

EGR SOLENOID
(2.4L MTX/3.3L/3.8L)

CAV	CIRCUIT	FUNCTION
1	K35 18GY/YL	EGR SOLENOID CONTROL
2	F87 18WT/BK	FUSED IGNITION SWITCH OUTPUT

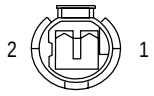

EGR SOLENOID
(DIESEL)

CAV	CIRCUIT	FUNCTION
1	A142 18DG/OR	AUTO SHUTDOWN RELAY OUTPUT
2	K35 20GY/YL	EGR SOLENOID CONTROL

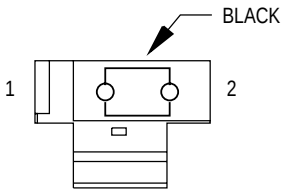

ELECTRIC WIPER DE-ICER-C1

CAV	CIRCUIT	FUNCTION
1	V20 18RD	REAR WASHER MOTOR CONTROL
2	-	-

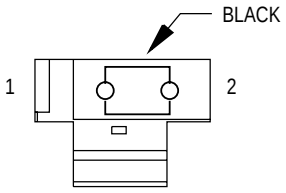

ELECTRIC WIPER DE-ICER-C2

CAV	CIRCUIT	FUNCTION
1	C66 18BK/WT	WIPER DE-ICE SWITCHED GROUND
2	-	-

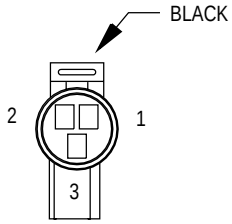

ENGINE COOLANT TEMPERATURE SENSOR (DIESEL)

CAV	CIRCUIT	FUNCTION
1	K2 20TN/BK	ENGINE COOLANT TEMPERATURE SENSOR SIGNAL
2	K4 20BK/LB	SENSOR GROUND
3	G58 20BK/YL	ENGINE COOLANT TEMPERATURE SENSOR SIGNAL

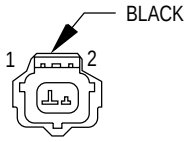

ENGINE COOLANT TEMPERATURE SENSOR (GAS)

CAV	CIRCUIT	FUNCTION
1	K4 18BK/LB	SENSOR GROUND
2	K2 18TN/BK	ENGINE COOLANT TEMPERATURE SENSOR SIGNAL

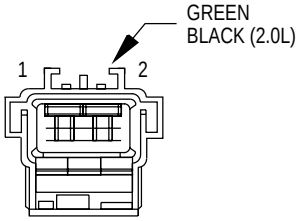

ENGINE OIL PRESSURE SWITCH

CAV	CIRCUIT	FUNCTION
1	G6 16GY	ENGINE OIL PRESSURE SWITCH SENSE
2	-	-

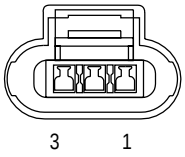

ENGINE SPEED SENSOR (DIESEL)

CAV	CIRCUIT	FUNCTION
1	K3 20BK/VT	ENGINE SPEED RETURN
2	-	-
3	K24 20GY/BK	ENGINE SPEED SENSOR SIGNAL

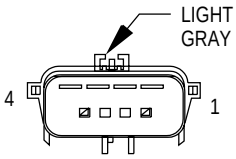

EVAP LEAK DETECTION PUMP (EXCEPT BUILT-UP-EXPORT)

CAV	CIRCUIT	FUNCTION
1	K107 18DB/WT*	LEAK DETECTION PUMP SWITCH SENSE
1	K107 18YL/BK**	LEAK DETECTION PUMP SWITCH SENSE
2	K106 18WT/DG	LEAK DETECTION PUMP SOLENOID CONTROL
3	F87 18WT/BK	FUSED IGNITION SWITCH OUTPUT
4	-	-

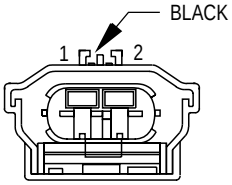

EVAP/PURGE SOLENOID

CAV	CIRCUIT	FUNCTION
1	K52 18PK/BK	EVAP/PURGE SOLENOID CONTROL
2	K70 18VT/RD	EVAP/PURGE CURRENT SENSE

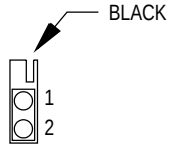

EVAPORATOR TEMPERATURE SENSOR

CAV	CIRCUIT	FUNCTION
1	C21 20DB/OR	A/C SWITCH SENSE
2	C57 20DB/GY	SENSOR GROUND

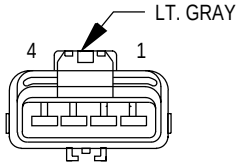

FLEXIBLE FUEL SENSOR (3.3L/ETHANOL)

CAV	CIRCUIT	FUNCTION
1	K7 18OR	8V SUPPLY
2	K4 18BK/LB	SENSOR GROUND
3	K50 18YL/WT	FLEXIBLE FUEL SENSOR SIGNAL
4	-	-

* 3.3L/3.8L
** 2.4L

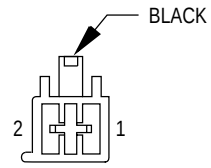

FRONT BLOWER MOTOR

CAV	CIRCUIT	FUNCTION
1	C71 12DB	BLOWER MOTOR DRIVER
2	C7 12BK/TN	HIGH SPEED BLOWER MOTOR

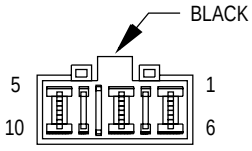

FRONT BLOWER MOTOR RESISTOR BLOCK

CAV	CIRCUIT	FUNCTION
1	C5 16LG	M1 SPEED BLOWER MOTOR
2	-	-
3	C6 14LB	M2 SPEED BLOWER MOTOR
4	-	-
5	C104 12RD/WT	M3 SPEED BLOWER MOTOR
6	C107 12TN/BK	HIGH SPEED BLOWER MOTOR
7	-	-
8	-	-
9	-	-
10	C4 16TN	LOW SPEED BLOWER MOTOR

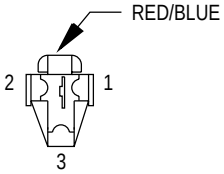

FRONT CIGAR LIGHTER POWER OUTLET

CAV	CIRCUIT	FUNCTION
1	F30 16RD	FUSED B(+)
2	E2 20OR	FUSED PANEL LAMPS DIMMER SWITCH SIGNAL
3	Z1 16BK	GROUND

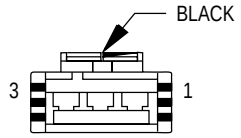

FRONT READING LAMPS/ SWITCH

CAV	CIRCUIT	FUNCTION
1	M13 20BK/YL	FRONT READING LAMP FEED
2	M20 20BR	COURTESY LAMP GROUND
3	F41 20PK/VT	FUSED B(+)

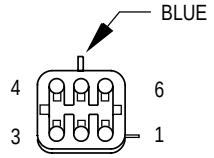

FRONT READING LAMPS/ SWITCH (OVERHEAD CONSOLE)

CAV	CIRCUIT	FUNCTION
1	M13 20BK/YL	FRONT READING LAMP FEED
2	E2 18OR	PANEL LAMPS FEED
3	Z2 18BK/LG	GROUND
4	F41 20PK/VT	FUSED (B+)
5	-	-
6	M20 20BR	COURTESY LAMP GROUND

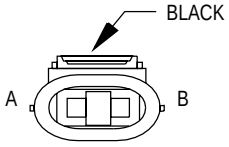

FRONT WASHER MOTOR

CAV	CIRCUIT	FUNCTION
A	F1 20DB	FUSED IGNITION (RUN-ACC)
B	V10 20BR	WASHER PUMP CONTROL SWITCH OUTPUT

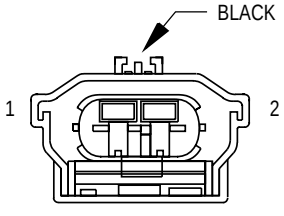

FUEL HEATER (DIESEL)

CAV	CIRCUIT	FUNCTION
1	A141 18DG/WT	FUEL PUMP RELAY OUTPUT
2	Z1 18BK	GROUND

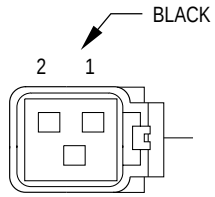

FUEL INJECTOR NO. 1 (2.0L/2.4L)

CAV	CIRCUIT	FUNCTION
1	K11 18WT/DB	INJECTOR NO. 1 DRIVER
2	A142 18DG/OR	AUTO SHUTDOWN RELAY OUTPUT

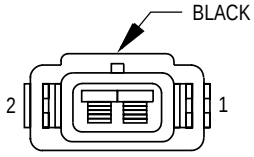

FUEL INJECTOR NO. 1 (3.3L/3.8L)

CAV	CIRCUIT	FUNCTION
1	A142 18DG/OR	AUTOMATIC SHUTDOWN RELAY OUTPUT
2	K11 18WT/DB	INJECTOR NO. 1 DRIVER

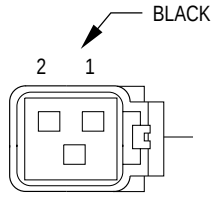

FUEL INJECTOR NO. 2 (2.0L/2.4L)

CAV	CIRCUIT	FUNCTION
1	K12 18TN/WT	INJECTOR NO. 2 DRIVER
2	A142 18DG/OR	AUTO SHUTDOWN RELAY OUTPUT

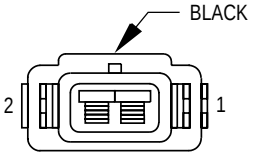

FUEL INJECTOR NO. 2 (3.3L/3.8L)

CAV	CIRCUIT	FUNCTION
1	A142 18DG/OR	AUTOMATIC SHUTDOWN RELAY OUTPUT
2	K12 18TN/WT	INJECTOR NO. 2 DRIVER

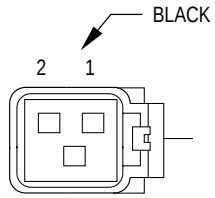

FUEL INJECTOR NO. 3 (2.0L/2.4L)

CAV	CIRCUIT	FUNCTION
1	K13 18YL/WT	INJECTOR NO. 3 DRIVER
2	A142 18DG/OR	AUTO SHUTDOWN RELAY OUTPUT

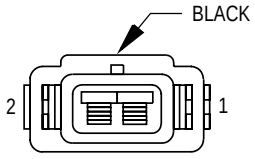

FUEL INJECTOR NO. 3 (3.3L/3.8L)

CAV	CIRCUIT	FUNCTION
1	A142 18DG/OR	AUTOMATIC SHUTDOWN RELAY OUTPUT
2	K13 18YL/WT	INJECTOR NO. 3 DRIVER

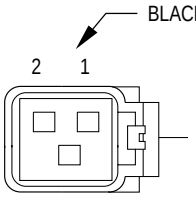

FUEL INJECTOR NO. 4 (2.0L/2.4L)

CAV	CIRCUIT	FUNCTION
1	K14 18LB/BR	INJECTOR NO. 4 DRIVER
2	A142 18DG/OR	AUTO SHUTDOWN RELAY OUTPUT

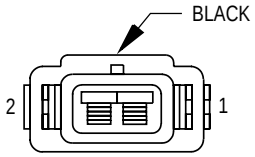

FUEL INJECTOR NO. 4 (3.3L/3.8L)

CAV	CIRCUIT	FUNCTION
1	A142 18DG/OR	AUTOMATIC SHUTDOWN RELAY OUTPUT
2	K14 18LB/BR	INJECTOR NO. 4 DRIVER

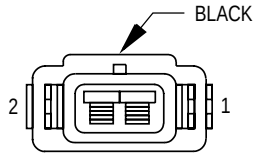

FUEL INJECTOR NO. 5 (3.3L/3.8L)

CAV	CIRCUIT	FUNCTION
1	A142 18DG/OR	AUTOMATIC SHUTDOWN RELAY OUTPUT
2	K38 18GY	INJECTOR NO. 5 DRIVER

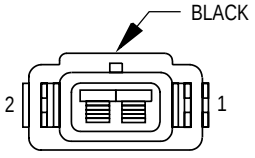

FUEL INJECTOR NO. 6 (3.3L/3.8L)

CAV	CIRCUIT	FUNCTION
1	A142 18DG/OR	AUTOMATIC SHUTDOWN RELAY OUTPUT
2	K58 18BR/DB	INJECTOR NO. 6 DRIVER

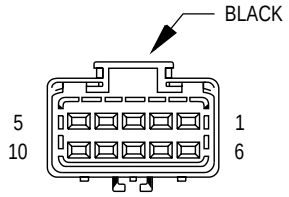

FUEL PUMP MODULE (DIESEL)

CAV	CIRCUIT	FUNCTION
1	K134 18LB/BK	SLEEVE POSITION SENSOR (-)
2	K57 18LG/OR	CONTROL SLEEVE POSTION SENSOR
3	K135 18WT/BK	SLEEVE POSTION SENSOR (+)
4	K4 20BK/LB	SENSOR GROUND
5	K126 18LG	SOLENOID CONTROL
6	K153 18OR/DG	SHUT OFF FEED
7	K156 18GY	FUEL TEMPERATURE SENSOR SIGNAL
8	K140 18TN/WT	FUEL QUANTITY ACTUATOR SIGNAL
9	A142 18DG/OR	AUTO SHUTDOWN RELAY OUTPUT
10	A142 18DG/OR	AUTO SHUTDOWN RELAY OUTPUT

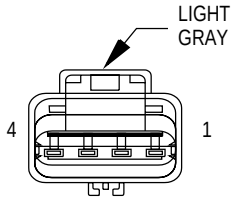

FUEL TANK MODULE

CAV	CIRCUIT	FUNCTION
1	Z1 16BK	GROUND
2	L1 20VT/BK	BACK-UP LAMP FEED
3	G4 18DB	FUEL LEVEL SENSOR SIGNAL
4	A141 16DG/WT*	FUEL PUMP RELAY OUTPUT

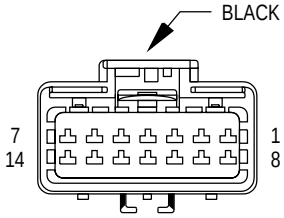

G200

CAV	CIRCUIT
1	Z2 20BK/LG
2	Z2 20BK/LG
3	Z2 20BK/LG
4	-
5	Z2 18BK/LG
6	Z1 20BK
7	Z1 20BK
8	Z1 18BK**
9	Z1 20BK
10	Z1 16BK
11	Z2 20BK/LG
12	Z2 20BK
13	Z1 18BK
14	Z1 20BK

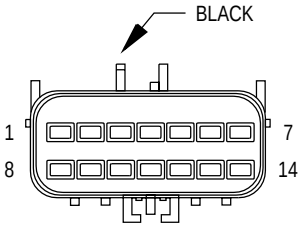

CAV	CIRCUIT
1	
2	
3	
4	
5	
6	GROUND BUS BAR
7	
8	
9	
10	
11	
12	
13	
14	

* GAS
** RHD

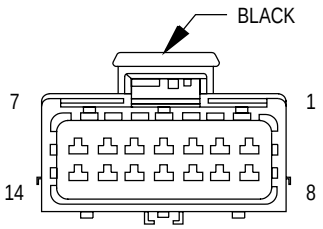

G300

CAV	CIRCUIT
1	Z1 20BK
	Z1 20BK
2	Z1 12BK
3	Z12 20BK/TN*
4	-
5	Z1 12BK
6	Z1 20BK***
	Z1 18BK
7	Z1 12BK*
	Z12 14BK/TN**
8	Z1 14BK
9	Z1 20BK
	Z1 20BK
10	Z1 18BK
11	Z1 18BK
12	Z1 14BK
13	-
14	Z1 20BK
	Z1 18BK ●●

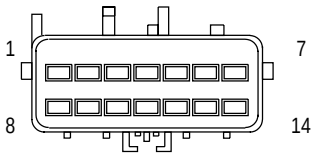

CAV	CIRCUIT
1	
2	
3	
4	
5	
6	
7	
8	Z1 BUS BAR
9	
10	
11	
12	
13	
14	

* GAS
** DIESEL
*** LHD
● EXCEPT BUILT-UP-EXPORT
●● BUILT-UP-EXPORT

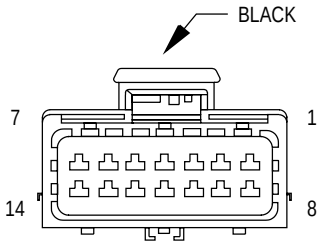

G301
(DIESEL)

CAV	CIRCUIT
1	Z11 20BK/WT
	Z1 18BK
2	Z2 20BK/LG
3	Z2 18BK/LG
	Z2 20BK/LG
4	-
5	Z1 12BK
6	Z12 18BK
7	Z1 20BK
8	Z1 18BK
9	Z1 20BK
10	Z1 18BK
11	Z1 18BK
12	Z1 18BK
13	Z1 18BK
14	Z1 20BK

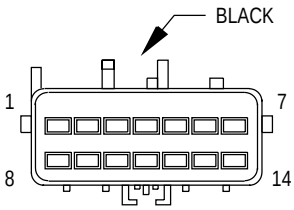

(DIESEL)

CAV	CIRCUIT
1	
1	
2	
3	
3	
4	
5	Z1 BUS BAR
6	
7	
8	
9	
10	
11	
12	
13	
14	

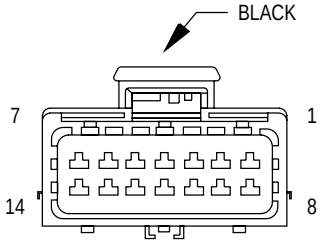

G301
(GAS)

CAV	CIRCUIT
1	Z1 18BK
2	Z2 20BK/LG
3	Z2 20BK/LG
4	-
5	Z2 18BK/LG
6	-
7	Z1 20BK*
	Z1 20BK*
7	Z1 20BK** ▲
8	Z1 20BK
9	Z1 20BK ▲
10	Z1 18BK ▲
11	Z1 18BK ▲
12	Z1 18BK
13	Z1 18BK
14	Z1 20BK

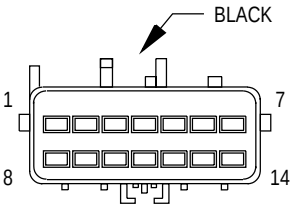

CAV	CIRCUIT
1	
2	
3	
4	
5	
6	
7	Z1 BUS BAR
7	
8	
9	
10	
11	
12	
13	
14	

* EXCEPT BUILT-UP-EXPORT/CHRYSLER
** EXCEPT BUILT-UP-EXPORT/PLYMOUTH, DODGE
▲BUILT-UP-EXPORT

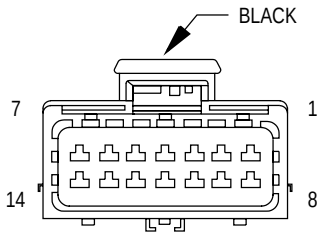

G302

CAV	CIRCUIT
1	-
2	-
3	Z1 20BK
4	-
5	Z1 14BK
6	-
7	-
8	Z1 18BK
9	Z1 20BK
10	Z1 12BK
11	Z1 16BK
12	Z1 18BK*
13	-
14	Z1 18BK

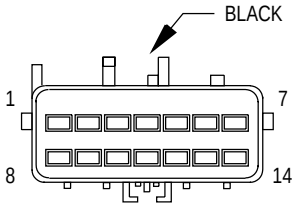

CAV	CIRCUIT
1	
2	
3	
4	
5	
6	
7	Z1 BUS BAR
8	
9	
10	
11	
12	
13	
14	

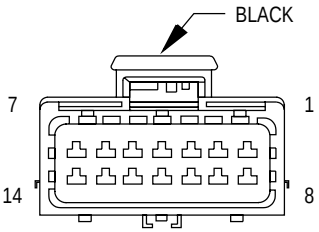

G400

CAV	CIRCUIT
1	Z1 12BK
2	Z1 20BK
3	Z1 20BK
4	-
5	Z1 12BK
6	Z1 18BK
7	Z1 20BK
8	Z1 20BK
9	Z2 20BK/LG
10	-
11	Z1 20BK
12	-
13	-
14	-

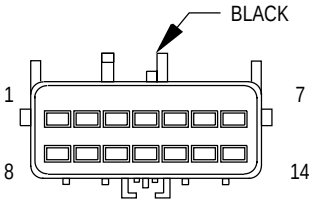

CAV	CIRCUIT
1	
2	
3	
4	
5	
6	
7	Z1 BUS BAR
8	
9	
10	
11	
12	
13	
14	

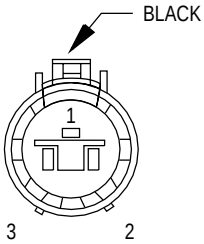

GENERATOR (GAS)

CAV	CIRCUIT	FUNCTION
1	A142 18DG/OR	ASD RELAY OUTPUT
2	K20 18DG	GENERATOR FIELD DRIVER
3	-	-

* REAR A/C-HEATER

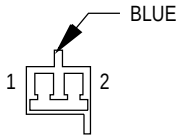

GLOVE BOX LAMP

CAV	CIRCUIT	FUNCTION
1	F41 20PK/VT	FUSED B(+)
2	M20 20BR	COURTESY LAMP GROUND

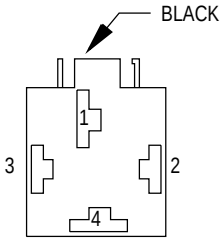

GLOW PLUG RELAY (DIESEL)

CAV	CIRCUIT	FUNCTION
1	A54 10RD	FUSED B(+)
2	K152 18WT/DG	GLOW PLUG RELAY CONTROL SENSE
3	A142 18DG/OR	AUTO SHUTDOWN RELAY OUTPUT
4	K154 10GY	GLOW PLUG RELAY CONTROL

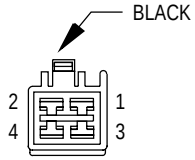

HS6D (HEATED SEAT)

CAV	CIRCUIT
1	Z1 14BK
2	A2 12PK/BK
3	F35 14RD
4	-

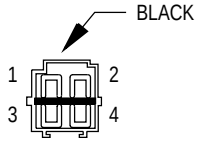

S02

CAV	CIRCUIT
1	Z1 14BK
	Z1 20BK
2	A2 12PK/BK
3	F35 14RD
4	-

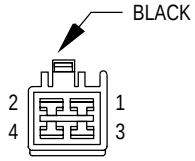

HS6P

CAV	CIRCUIT
1	-
2	-
3	F35 14RD
4	-

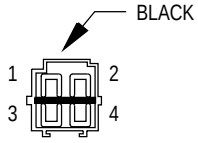

S02

CAV	CIRCUIT
1	-
2	-
3	F35 14RD
4	-

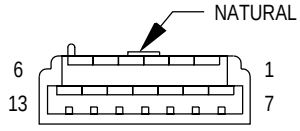

HEADLAMP SWITCH - C1

CAV	CIRCUIT	FUNCTION
1	Z1 20BK*	GROUND
2	L44 20VT/RD*	FUSED RIGHT LOW BEAM OUTPUT
3	M112 22BR/LG	COURTESY LAMP RELAY CONTROL
4	M32 22BK/LB	COURTESY LAMP SWITCH SENSE
5	E17 20YL/BK	STEP DIMMER SWITCH SENSE
	E17 20YL/BK	STEP DIMMER SWITCH SENSE
6	Z1 20BK	GROUND
7	-	-
8	L13 20BR/YL*	HEADLAMP LEVELING SIGNAL
9	M111 22BR/WT	COURTESY LAMP RELAY CONTROL
10	M13 20BK/YL	COURTESY LAMP RELAY OUTPUT
11	M113 20LB/PK	READING LAMP FEED
12	E92 22OR/BK	DIMMER SWITCH SIGNAL
13	-	-

* BUILT-UP-EXPORT

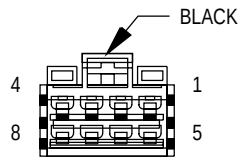

HEADLAMP SWITCH - C2

CAV	CIRCUIT	FUNCTION
1	E2 20OR	PANEL LAMPS FEED
2	Z1 18BK	GROUND
3	L307 20LG/OR	HEADLAMP SWITCH SENSE
4	-	-
5	L77 18BR/YL	FUSED LEFT INBOARD TAIL LAMP
5	L39 18LB*	FOG LAMP SWITCH OUTPUT
6	Z39 18BK	GROUND
7	L36 20LG	REAR FOG LAMP
7	L110 22BK/YL*	SENSOR SIGNAL
8	L308 20LG/WT	PARK LAMP SWITCH SENSE

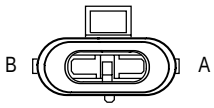

HEADLAMP WASHER (BUILT-UP-EXPORT)

CAV	CIRCUIT	FUNCTION
A	Z1 18BK	GROUND
B	V53 18RD/YL	WASHER RELAY OUTPUT

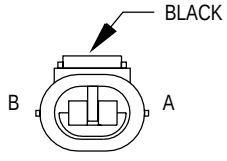

HIGH NOTE HORN

CAV	CIRCUIT	FUNCTION
A	X2 18DG/RD	HORN RELAY OUTPUT
B	Z1 18BK	GROUND

* EXCEPT BUILT-UP-EXPORT

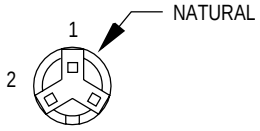

HOOD AJAR SWITCH

CAV	CIRCUIT	FUNCTION
1	G70 18BR/TN	HOOD AJAR SWITCH SENSE
2	Z1 18BK	GROUND

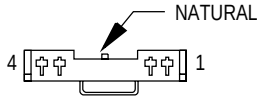

HORN/SPEED CONTROL SWITCH

CAV	CIRCUIT	FUNCTION
1	X3 20BK/RD	HORN RELAY DRIVER
2	-	-
3	Z2 20BK/LG	GROUND
4	V37 20RD/LG	SPEED CONTROL SWITCH SIGNAL

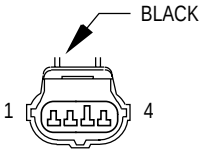

IDLE AIR CONTROL MOTOR

CAV	CIRCUIT	FUNCTION
1	K59 18VT/BK	IDLE AIR CONTROL MOTOR NO.4 DRIVER
2	K40 18BR/WT	IDLE AIR CONTROL MOTOR NO.3 DRIVER
3	K60 18YL/BK	IDLE AIR CONTROL MOTOR NO.2 DRIVER
4	K39 18GY/RD	IDLE AIR CONTROL MOTOR NO.1 DRIVER

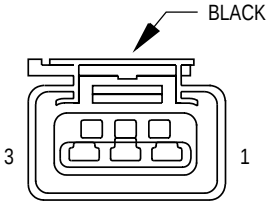

IGNITION COIL PACK (2.0L/2.4L)

CAV	CIRCUIT	FUNCTION
1	K17 18DB/TN	IGNITION COIL NO. 2 DRIVER
2	A142 18DG/OR	ASD RELAY OUTPUT
3	K19 18GY/RD	IGNITION COIL NO. 1 DRIVER

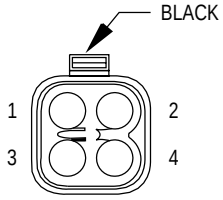

IGNITION COIL PACK (3.3L/3.8L)

CAV	CIRCUIT	FUNCTION
1	K18 18RD/YL	IGNITION COIL DRIVER NO. 3, 6
2	K19 18GY/RD	IGNITION COIL DRIVER NO. 1, 4
3	A142 18DG/OR	ASD RELAY OUTPUT
4	K17 18DB/TN	IGNITION COIL DRIVER NO. 2, 5

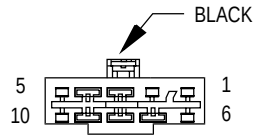

IGNITION SWITCH - C1

CAV	CIRCUIT	FUNCTION
1	Z1 20BK	GROUND
2	G9 20GY/BK	RED BRAKE WARNING LAMP DRIVER
3	A2 12PK/BK	FUSED B(+)
4	A22 12BK/OR	IGNITION SWITCH OUTPUT (RUN)
5	-	-
6	-	-
7	A1 12RD	FUSED B(+)
8	A31 12BK/WT	IGNITION SWITCH OUTPUT (RUN-ACC)
9	A21 12DB	IGNITION SWITCH OUTPUT (ST-RUN)
10	A41 12YL	IGNITION SWITCH OUTPUT (START)

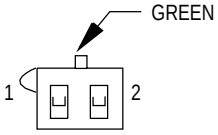

IGNITION SWITCH - C2

CAV	CIRCUIT	FUNCTION
1	G26 20LB	KEY-IN IGNITION SWITCH SENSE
2	Z1 20BK	GROUND

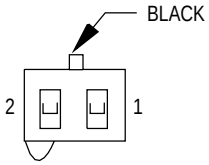

IGNITION SWITCH - C3

CAV	CIRCUIT	FUNCTION
1	M1 20PK	FUSED B(+)
2	A81 20DG/RD	IGNITION SWITCH OUTPUT (OFF/RUN/START)

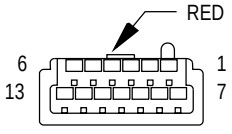

INSTRUMENT CLUSTER

CAV	CIRCUIT	FUNCTION
1	-	-
2	M1 20PK	FUSED B(+)
3	-	-
4	-	-
5	-	-
6	E2 20OR	PANEL LAMPS FEED
7	Z2 20BK/LG	GROUND
8	-	-
9	D2 20WT/BK	CCD BUS (-)
10	D1 20VT/BR	CCD BUS (+)
11	F11 20RD/WT	FUSED IGNITION (ST-RUN-OFF)
12	-	-
13	Z1 20BK	GROUND

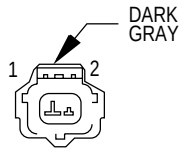

INTAKE AIR TEMPERATURE SENSOR (2.4L)

CAV	CIRCUIT	FUNCTION
1	K4 18BK/LB	SENSOR GROUND
2	K21 18BK/RD	INTAKE AIR TEMPERATURE SIGNAL

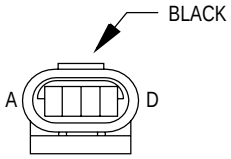

INTAKE AIR TEMPERATURE/ MANIFOLD ABSOLUTE PRESSURE SENSOR (2.0L)

CAV	CIRCUIT	FUNCTION
A	K4 18BK/LB	SENSOR GROUND
B	K21 18BK/RD	INTAKE AIR TEMPERATURE SIGNAL
C	K6 18VT/WT	5 VOLT SUPPLY
D	K1 18DG/RD	MAP SENSOR SIGNAL

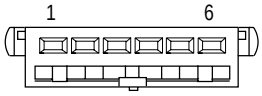

J02A

CAV	CIRCUIT
1	Z1 12BK
2	L50 20WT/TN
3	M11 20PK/LB
4	F133 20BR/RD
5	F136 20VT/WT
6	L77 20BR/LB

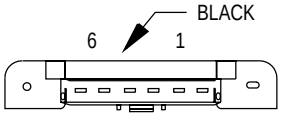

L15

CAV	CIRCUIT
1	Z1 12BK
2	L50 20WT/TN
3	M11 20PK/LB
4	F133 20BR/RD
5	F136 20VT/WT
6	L77 20BR/LB

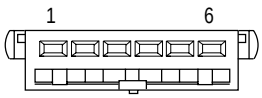

J03A

CAV	CIRCUIT
1	C15 12BK/WT
2	V13 18BR/LG
3	V23 18BR/PK
4	G78 18TN/BK
5	-
6	P98 20WT/RD

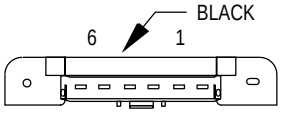

L16

CAV	CIRCUIT
1	C15 12BK/WT
2	V13 18BR/LG
3	V23 18BR/PK
4	G78 18TN/BK
5	-
6	P98 20WT/RD

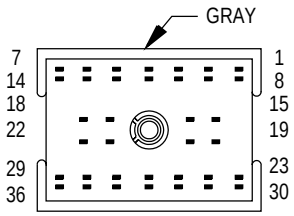

JUNCTION BLOCK - C1

CAV	CIRCUIT	FUNCTION
1	E2 20OR	PANEL LAMPS FEED
	E2 20OR**	PANEL LAMPS FEED
2	L7 12BK/YL	PARK LAMP RELAY OUTPUT
3	F39 18PK/LG ▲	FUSED B(+)
	F39 18PK/LG ▲	FUSED B(+)
4	A2 12PK/BK	FUSED B(+)
5	L77 20BR/YL ▲▲	FUSED LEFT INBOARD TAIL LAMP
5	L77 20BR/YL	FUSED LEFT INBOARD TAIL LAMP
	L77 18BR/YL ▲	FUSED LEFT INBOARD TAIL LAMP
6	C15 12BK/WT	REAR DEFOGGER RELAY OUTPUT
7	V23 18BR/PK	FUSED IGNITION SWITCH OUTPUT
8	E2 20OR	PANEL LAMPS FEED
	E2 20OR	PANEL LAMPS FEED
9	F131 20BK/PK	DRIVER UNLOCK RELAY OUTPUT
10	-	-
11	F133 20BR/RD	LOCK RELAY OUTPUT
12	L94 20OR/WT ▲▲	LOW BEAM RELAY CONTROL
13	M1 20PK	FUSED B (+)
	M1 20PK ●	FUSED B (+)
14	V23 18BR/PK	FUSED IGNITION SWITCH OUTPUT
15	F136 20VT/WT	UNLOCK RELAY OUTPUT
	F136 20VT/WT	UNLOCK RELAY OUTPUT
16	L43 18VT* ▲▲	FUSED LEFT LOW BEAM OUTPUT
	L43 18VT* ▲▲	FUSED LEFT LOW BEAM OUTPUT
17	-	-
18	L77 20BR/LB	FUSED LEFT INBOARD TAIL LAMP
	L77 20BR/LB	FUSED LEFT INBOARD TAIL LAMP
19	F136 20VT/YL	UNLOCK RELAY OUTPUT
	F136 20VT/YL	UNLOCK RELAY OUTPUT
20	F11 20RD/WT ■	FUSED IGNITION SWITCH OUTPUT (ST-RUN-OFF)
21	-	-
22	X1 16DG/RD	NAME BRAND SPEAKER RELAY OUTPUT
23	L78 20DG/YL	FUSED B(+)
	L78 20DG/YL	FUSED B(+)
24	-	-
25	L39 18LB ▲▲	FOG LAMP RELAY OUTPUT
26	F133 20BR/YL	LOCK RELAY OUTPUT
	F133 20BR/YL	LOCK RELAY OUTPUT
27	-	-
28	-	-
29	-	-
30	F87 18WT/BK	FUSED IGNITION SWITCH OUTPUT
	F87 18WT/BK ■■	FUSED IGNITION SWITCH OUTPUT
31	L39 18LB* ▲▲	FOG LAMP SWITCH OUTPUT
	L39 18LB* ▲▲	FOG LAMP SWITCH OUTPUT
32	F133 20BR	LOCK RELAY OUTPUT
	F133 20BR	LOCK RELAY OUTPUT
33	A2 12PK/BK	FUSED B(+)
34	V53 18RD/YL ▲	WASHER RELAY OUTPUT
35	A4 12BK/RD	FUSED B(+)
36	P174 20YL/RD ▲	POWER MIRROR UNFOLD RELAY

* CHRYSLER
** REAR A/C-HEATER
● MEMORY SEAT
▲ BUILT-UP-EXPORT
▲▲ EXCEPT BUILT-UP-EXPORT
■ EATX
■■ DIESEL

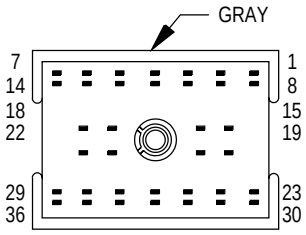

JUNCTION BLOCK - C2

CAV	CIRCUIT	FUNCTION
1	G9 20GY/BK	RED BRAKE WARNING LAMP DRIVER
2	Z1 14BK	GROUND
3	F1 20DB	FUSED IGNITION SWITCH OUTPUT (RUN-ACC)
	F1 20DB	FUSED IGNITION SWITCH OUTPUT (RUN-ACC)
4	X4 20GY/OR	HORN RELAY CONTROL
5	L60 18TN	RIGHT TURN SIGNAL
6	M11 20PK/LB	COURTESY LAMP RELAY OUTPUT
7	F20 20WT	FUSED IGNITION SWITCH OUTPUT
	F20 20WT	FUSED IGNITION SWITCH OUTPUT
8	G9 20GY/BK ●	RED BRAKE WARNING LAMP DRIVER
9	L97 18PK/DB	PARK LAMP RELAY CONTROL
10	F45 20YL/RD	FUSED B(+) ENGINE STARTER MOTOR RELAY
11	L61 18LG	LEFT TURN SIGNAL
12	C40 12BR/WT*	5-VOLT SUPPLY
13	F55 12TN/DG	FUSED IGNITION SWITCH OUTPUT
14	F20 20WT	FUSED IGNITION SWITCH OUTPUT
15	F41 20PK/VT	FUSED B(+)
16	F1 20DB	FUSED B(+)
17	F55 12TN/DG	FUSED IGNITION SWITCH OUTPUT
18	F20 20WT	FUSED B(+)
	F20 18WT	FUSED B(+)
19	F41 20PK/VT	FUSED B(+)
20	-	-
21	V10 20BR	WASHER PUMP CONTROL SWITCH OUTPUT
22	M113 20LB/PK	DOME LAMP FEED
23	F133 20BR/YL**	LOCK RELAY OUTPUT
	F133 20BR/YL**	LOCK RELAY OUTPUT
24	-	-
25	-	-
26	-	-
27	L9 18BK/WT	FUSED FLASHER FEED
28	L63 18DG/RD	LEFT TURN SIGNAL
	L63 18DG/RD ●	LEFT TURN SIGNAL
29	M11 20PK/LB	COURTESY LAMP RELAY OUTPUT
	M11 20PK/LB	COURTESY LAMP RELAY OUTPUT
30	P171 20VT/WT ●	POWER MIRROR FOLD RELAY
31	A22 12BK/OR	IGNITION SWITCH OUTPUT (RUN)
32	-	-
33	-	-
34	F21 16TN	FUSED IGNITION SWITCH OUTPUT
35	-	-
36	L62 18BR/RD	RIGHT TURN SIGNAL
	L62 18BR/RD ●	RIGHT TURN SIGNAL

* REAR A/C
** GAS, EXCEPT BUILT-UP-EXPORT
● BUILT-UP-EXPORT

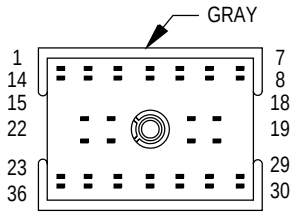

JUNCTION BLOCK - C3

CAV	CIRCUIT	FUNCTION
1	-	-
2	A22 12BK/OR	IGNITION SWITCH OUTPUT (RUN)
3	-	-
4	L305 22LB/WT	LEFT TURN SWITCH SENSE
5	F1 20DB	FUSED IGNITION SWITCH OUTPUT (RUN-ACC)
6	-	-
7	-	-
8	G9 20GY/BK	RED BRAKE WARNING LAMP DRIVER
	G9 20GY/BK	RED BRAKE WARNING LAMP DRIVER
9	G9 20GY/BK* ●	RED BRAKE WARNING LAMP DRIVER
10	M112 22BR/LG	COURTESY LAMP RELAY CONTROL
11	P160 20LB**	POWER MIRROR FOLD
	P160 20LB**	POWER MIRROR FOLD
12	-	-
13	X60 20RD/DG	NAME BRAND SPEAKER RELAY DRIVER
14	L62 18BR/RD	RIGHT TURN SIGNAL
15	V20 18RD	REAR WASHER MOTOR CONTROL
16	F41 20PK/VT	FUSED B (+)
17	L63 18DG/RD ●●	LEFT TURN SIGNAL
18	V10 20BR	WASHER PUMP CONTROL SWITCH OUTPUT
19	G9 20GY/BK ●●	RED BRAKE WARNING LAMP DRIVER
20	F41 20PK/VT	FUSED B(+)
	F41 20PK/VT**	FUSED B(+)
21	L63 18DG/RD	LEFT TURN SIGNAL
22	L302 22LB/YL	RIGHT TURN SWITCH SENSE
23	-	-
24	X12 18RD/WT	FUSED IGNITION SWITCH OUTPUT
	X12 20RD/WT ■	FUSED IGNITION SWITCH OUTPUT
25	-	-
26	L91 22DB/PK	COMBINATION FLASHER SWITCHES GROUND
	L91 20DB/PK ■	COMBINATION FLASHER SWITCHES GROUND
27	-	
28	M113 20LB/PK	READING LAMP FEED
29	M11 20PK/LB	COURTESY LAMP RELAY OUTPUT
30	-	-
31	A31 12BK/WT	IGNITION SWITCH OUTPUT (RUN-ACC)
32	-	-
33	L93 22PK	HIGH BEAM RELAY CONTROL
34	M111 22BR/WT	SWITCHED COURTESY LAMP RELAY CONTROL
35	-	-
36	-	-

* LHD
** BUILT-UP-EXPORT
● GAS
●● GAS, EXCEPT BUILT-UP-EXPORT
■ RHD

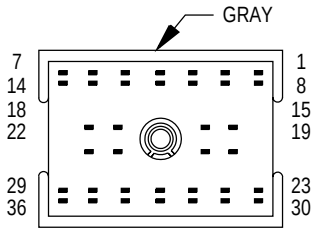

JUNCTION BLOCK - C4

CAV	CIRCUIT	FUNCTION
1	E2 20OR	PANEL LAMPS FEED
	E2 20OR	PANEL LAMPS FEED
2	-	-
3	-	-
4	A2 12PK/BK	FUSED B(+)
5	-	-
6	M1 20PK	FUSED B (+)
	M1 20PK	FUSED B (+)
7	A41 12YL	IGNITION SWITCH OUTPUT (START)
8	E2 20OR	PANEL LAMPS FEED
	E2 20OR	PANEL LAMPS FEED
9	-	-
10	F11 20RD/WT	FUSED IGNITION SWITCH OUTPUT (ST-RUN-OFF)
	F11 20RD/WT** ●●	FUSED IGNITION SWITCH OUTPUT (ST-RUN-OFF)
11	P159 20DG ■	POWER MIRROR UNFOLD
	P159 20DG ■	POWER MIRROR UNFOLD
12	-	-
13	M1 20PK	FUSED B (+)
	M1 20PK	FUSED B (+)
14	V23 18BR/PK	FUSED IGNITION SWITCH OUTPUT
	V23 18BR/PK	FUSED IGNITION SWITCH OUTPUT
15	A81 20DG/RD	IGNITION SWITCH OUTPUT (ST-RUN-OFF)
16	E2 22OR ▲	PANEL LAMPS FEED
17	M1 20PK	FUSED B (+)
	M1 20PK	FUSED B (+)
18	-	-
19	F87 20WT/BK	FUSED IGNITION SWITCH OUTPUT
20	C16 20LB/YL	REAR DEFOGGER LAMP DRIVER
	C16 20LB/YL	REAR DEFOGGER LAMP DRIVER
21	Z1 20BK	GROUND
	Z1 18BK	GROUND
22	Z1 20BK	GROUND
	Z1 18BK	GROUND
23	E2 18OR	PANEL LAMPS FEED
	E2 20OR	PANEL LAMPS FEED
24	-	-
25	-	-
26	-	-
27	-	-
28	Z1 20BK	GROUND
	Z1 20BK	GROUND
29	Z2 20BK/LG	GROUND
	Z2 20BK/LG	GROUND
30	E2 20OR ●	PANEL LAMPS FEED
	E2 20OR*	PANEL LAMPS FEED
31	A21 12DB	IGNITION SWITCH OUTPUT (ST-RUN)
32	C14 22WT/RD	REAR DEFOGGER RELAY CONTROL
33	-	-
34	-	-
35	Z1 20BK	GROUND
	Z1 20BK	GROUND
	Z1 20BK*	GROUND
36	Z1 20BK	GROUND
	Z1 20BK ■	GROUND

* GAS
** RHD
● REAR A/C
●● GAS, BUILT-UP-EXPORT
▲ GAS, EXCEPT BUILT-UP-EXPORT
■ BUILT-UP-EXPORT

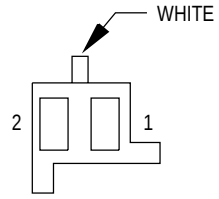

KEY-IN HALO LAMP

CAV	CIRCUIT	FUNCTION
1	Z1 20BK	GROUND
2	M11 20PK/LB	COURTESY LAMP SWITCH OUTPUT

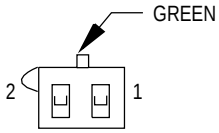

KEY-IN SWITCH

CAV	CIRCUIT	FUNCTION
1	G26 20LB	KEY-IN IGNITION SWITCH SENSE
2	Z1 20BK	GROUND

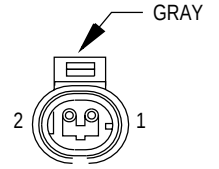

KNOCK SENSOR (2.0L/2.4L/3.8L)

CAV	CIRCUIT	FUNCTION
1	K42 18DB/LG	KNOCK SENSOR SIGNAL
2	K4 18BK/LB	SENSOR GROUND

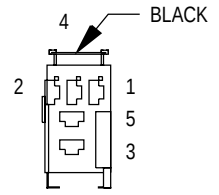

LEFT COMBINATION RELAY (TRAILER TOW)

CAV	CIRCUIT	FUNCTION
1	L63 18DG/RD	LEFT TURN SIGNAL
2	Z1 18BK	GROUND
	Z1 18BK	
3	L50 18WT/TN	STOP LAMP SWITCH OUTPUT
	L50 18WT/TN	STOP LAMP SWITCH OUTPUT
4	L615 18OR	LEFT COMBINATION RELAY OUTPUT
5	-	-

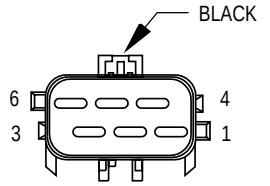

LEFT DOOR SPEAKER (PREMIUM)

CAV	CIRCUIT	FUNCTION
1	X154 20WT/VT*	LEFT INSTRUMENT PANEL SPEAKER (+)
	X153 20WT/BR**	LEFT INSTRUMENT PANEL SPEAKER (+)
2	X15 16BK/DG	AMPLIFIED SPEAKER GROUND
3	X53 20DG	LEFT FRONT SPEAKER (+)
4	X156 20VT/WT*	LEFT INSTRUMENT PANEL SPEAKER (-)
	X155 20BR/WT**	LEFT INSTRUMENT PANEL SPEAKER (-)
5	X13 16RD/DG	RADIO CHOKE OUTPUT
6	X55 20BR/RD	LEFT FRONT SPEAKER (-)

* RHD
** LHD

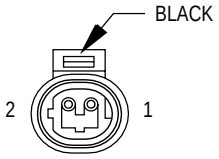

LEFT FOG LAMP (BUILT-UP-EXPORT)

CAV	CIRCUIT	FUNCTION
1	F39 18PK/LG	FUSED PARK LAMP RELAY OUTPUT
2	Z39 20BK	FOG LAMP SWITCHED GROUND

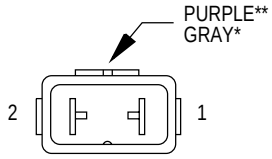

LEFT FOG LAMP (EXCEPT BUILT-UP-EXPORT)

CAV	CIRCUIT	FUNCTION
1	L39 18VT/RD*	FOG LAMP RELAY OUTPUT
	L39 18LB**	FOG LAMP RELAY OUTPUT
2	Z39 20BK	FOG LAMP SWITCHED GROUND

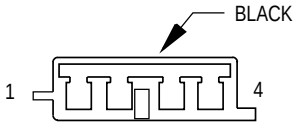

LEFT FRONT PANEL SPEAKER (PREMIUM)

CAV	CIRCUIT	FUNCTION
1	X156 20VT/WT ●	LEFT INSTRUMENT PANEL SPEAKER (-)
	X155 20BR/WT ●●	LEFT INSTRUMENT PANEL SPEAKER (-)
2	-	-
3	-	-
4	X154 20WT/VT ●	LEFT INSTRUMENT PANEL SPEAKER (+)
	X153 20WT/BR ●●	LEFT INSTRUMENT PANEL SPEAKER (+)

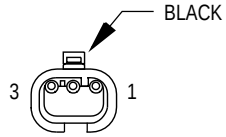

LEFT FRONT PARK/ TURN SIGNAL LAMP (BUILT-UP-EXPORT)

CAV	CIRCUIT	FUNCTION
1	L77 20BR/YL	FUSED LEFT INBOARD TAIL LAMP
2	Z1 18BK	GROUND
3	L61 18LG	LEFT TURN SIGNAL

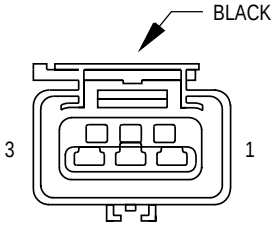

LEFT FRONT PARK/TURN SIGNAL LAMP (EXCEPT BUILT-UP-EXPORT)

CAV	CIRCUIT	FUNCTION
1	L61 18LG	LEFT TURN SIGNAL
2	L77 20BR/YL	FUSED LEFT INBOARD TAIL LAMP
3	Z1 18BK	GROUND

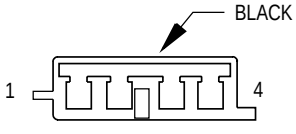

LEFT FRONT SPEAKER (BASE)

CAV	CIRCUIT	FUNCTION
1	-	-
2	X55 20BR/RD	LEFT FRONT SPEAKER (-)
3	X53 20DG	LEFT FRONT SPEAKER (+)
4	-	-

●RHD ●●LHD * DODGE/PLYMOUTH ** CHRYSLER

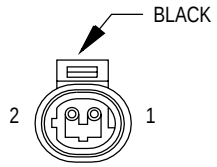

LEFT FRONT WHEEL SPEED SENSOR

CAV	CIRCUIT	FUNCTION
1	B8 18RD/DB	LEFT FRONT WHEEL SPEED SENSOR (-)
2	B9 18RD	LEFT FRONT WHEEL SPEED SENSOR (+)

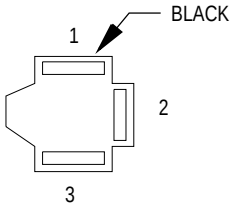

LEFT HEADLAMP (BUILT-UP-EXPORT)

CAV	CIRCUIT	FUNCTION
1	L33 20RD	FUSED LEFT HIGH BEAM OUTPUT
2	L43 18VT	FUSED LEFT LOW BEAM OUTPUT
3	Z1 20BK	GROUND

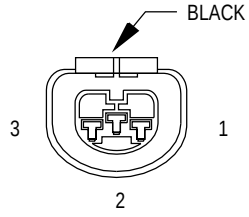

LEFT HEADLAMP (EXCEPT BUILT-UP-EXPORT)

CAV	CIRCUIT	FUNCTION
1	L43 18VT	FUSED LEFT LOW BEAM OUTPUT
2	Z1 20BK	GROUND
3	L33 20RD	FUSED LEFT HIGH BEAM OUTPUT

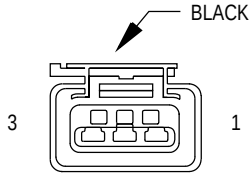

LEFT HEADLAMP LEVELING MOTOR (BUILT-UP-EXPORT)

CAV	CIRCUIT	FUNCTION
1	Z1 20BK	GROUND
2	L13 20BR/YL	HEADLAMP ADJUST SIGNAL
3	L44 20VT/RD	FUSED RIGHT LOW BEAM OUTPUT

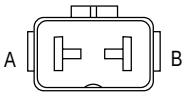

LEFT HIGH HEADLAMP (CHRYSLER) (EXCEPT-BUILT-UP-EXPORT)

CAV	CIRCUIT	FUNCTION
A	L33 20RD	FUSED LEFT HIGH BEAM OUTPUT
B	Z1 20BK	GROUND

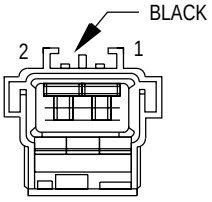

LEFT LIFTGATE FLOOD LAMP

CAV	CIRCUIT	FUNCTION
1	M11 20PK/LB	COURTESY LAMP RELAY OUTPUT
	M11 20PK/LB	COURTESY LAMP RELAY OUTPUT
2	Z1 20BK	GROUND

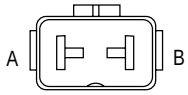

LEFT LOW HEADLAMP (CHRYSLER) (EXCEPT BUILT-UP-EXPORT)

CAV	CIRCUIT	FUNCTION
A	L43 18VT	FUSED LEFT LOW BEAM OUTPUT
B	Z1 20BK	GROUND

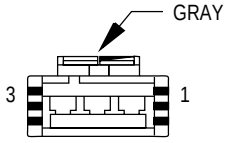

LEFT MID READING LAMP

CAV	CIRCUIT	FUNCTION
1	M113 20LB/PK	READING LAMP FEED
2	M20 20BR	COURTESY LAMP GROUND
3	F41 20PK/VT	FUSED B (+)

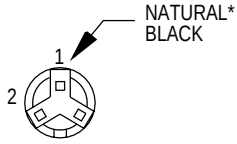

LEFT REAR DOOR AJAR SWITCH

CAV	CIRCUIT	FUNCTION
1	Z1 18BK	GROUND
2	G77 18TN/OR	LEFT REAR DOOR AJAR SWITCH SENSE
3	-	-

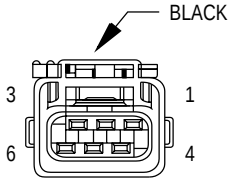

LEFT REAR LAMP ASSEMBLY (BUILT-UP-EXPORT)

CAV	CIRCUIT	FUNCTION
1	Z1 20BK	GROUND
2	L36 20LG	REAR FOG LAMP SWITCH OUTPUT
3	L77 20BR/LB	FUSED LEFT INBOARD TAIL LAMP
4	L1 20VT/BK	BACK-UP SWITCH OUTPUT
5	L63 18DG/RD	LEFT TURN SIGNAL
6	L50 18WT/TN	STOP LAMP SWITCH OUTPUT

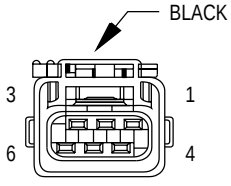

LEFT REAR LAMP ASSEMBLY (EXCEPT BUILT-UP-EXPORT)

CAV	CIRCUIT	FUNCTION
1	L63 18DG/RD	LEFT TURN SIGNAL
2	-	-
3	L1 20VT/BK	BACK-UP SWITCH OUTPUT
4	L77 20BR/YL	FUSED LEFT INBOARD TAIL LAMP
5	L50 18WT/TN	STOP LAMP SWITCH OUTPUT
6	Z1 20BK	GROUND

* DIESEL

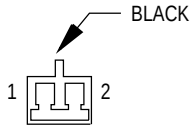

LEFT REAR PILLAR SPEAKER (PREMIUM)

CAV	CIRCUIT	FUNCTION
1	X157 20BR/LB	LEFT REAR PILLAR (-)
2	X151 20BR/YL	LEFT REAR PILLAR (+)

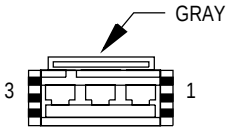

LEFT REAR READING LAMP

CAV	CIRCUIT	FUNCTION
1	M113 20LB/PK	COURTESY LAMP RELAY OUTPUT
2	M20 20BR	COURTESY LAMP GROUND
3	F41 20PK/VT	FUSED B (+)

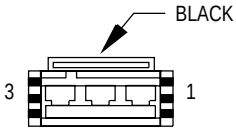

LEFT REAR SLIDING DOOR CONTACTS

CAV	CIRCUIT	FUNCTION
1	F133 20BR/YL	FUSED DOOR LOCK RELAY OUTPUT
2	F136 20VT/WT	FUSED DOOR UNLOCK RELAY OUTPUT
3	-	-

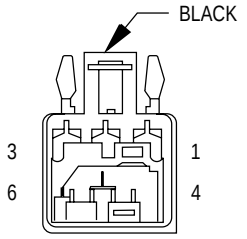

LEFT REAR SPEAKER

CAV	CIRCUIT	FUNCTION
1	X151 20BR/YL*	LEFT REAR SPEAKER (+)
2	X15 16BK/DG*	AMPLIFIER SPEAKER GROUND
3	X51 20BR/YL	LEFT REAR SPEAKER (+)
4	X157 20BR/LB*	LEFT REAR SPEAKER (-)
5	X13 16RD/DG*	RADIO CHOKE OUTPUT
6	X57 20BR/LB	LEFT REAR SPEAKER (-)

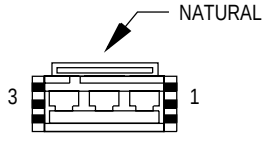

LEFT REAR VENT MOTOR (LHD)

CAV	CIRCUIT	FUNCTION
1	-	-
2	Q13 18DB	LEFT REAR VENT MOTOR (CLOSE)
3	Q23 18RD/WT	LEFT REAR VENT MOTOR (OPEN)

* PREMIUM

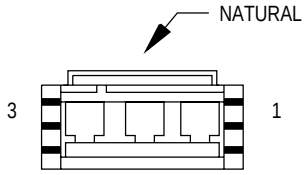

LEFT REAR VENT MOTOR (RHD)

CAV	CIRCUIT	FUNCTION
1	-	-
2	Q14 18GY	LEFT REAR VENT MOTOR (CLOSE)
3	Q24 18DG	LEFT REAR VENT MOTOR (OPEN)

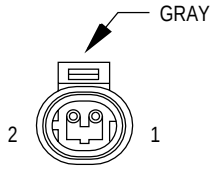

LEFT REAR WHEEL SPEED SENSOR

CAV	CIRCUIT	FUNCTION
1	B3 18LG/DB	LEFT REAR WHEEL SPEED SENSOR (-)
2	B4 18LG	LEFT REAR WHEEL SPEED SENSOR (+)

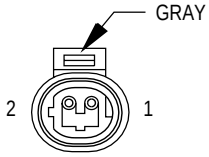

LEFT REPEATER LAMP (BUILT-UP-EXPORT)

CAV	CIRCUIT	FUNCTION
1	L63 18DG/RD	LEFT REPEATER LAMP SIGNAL
2	Z1 18BK	GROUND

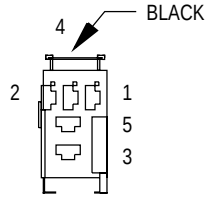

LEFT STOP/TURN SIGNAL RELAY (TRAILER TOW)

CAV	CIRCUIT	FUNCTION
1	L50 18WT/TN	STOP LAMP SWITCH OUTPUT
	L50 18WT/TN	
2	Z1 18BK	GROUND
	Z1 18BK	
3	L73 18YL	LEFT STOP/TURN SIGNAL OUTPUT
4	L63 18DG/RD	LEFT REAR TURN SIGNAL
	L63 18DG/RD	
5	L615 18OR	LEFT COMBINATION RELAY OUTPUT

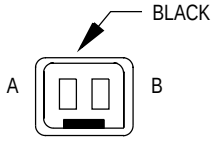

LEFT VISOR/VANITY MIRROR LAMPS

CAV	CIRCUIT	FUNCTION
A	M20 20BR	COURTESY LAMP GROUND
B	F41 20PK/VT	FUSED B (+)

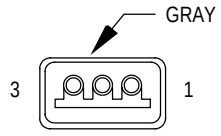

LICENSE LAMP

CAV	CIRCUIT	FUNCTION
1	Z1 20BK	GROUND
2	L77 20BR/LB	FUSED LEFT INBOARD TAIL LAMP
3	-	-

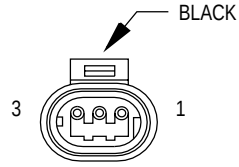

LIFTGATE AJAR SWITCH

CAV	CIRCUIT	FUNCTION
1	Z1 20BK	GROUND
2	-	-
3	G78 18TN/BK	LIFTGATE AJAR SWITCH SENSE

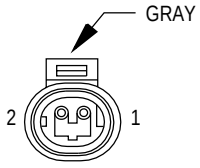

LIFTGATE ARM/ DISARM SWITCH

CAV	CIRCUIT	FUNCTION
1	Z2 20BK/LG	GROUND
2	P98 20WT/RD	LIFTGATE LOCK/UNLOCK MUX

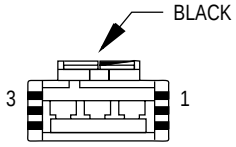

LIFTGATE LOCK MOTOR

CAV	CIRCUIT	FUNCTION
1	F133 20BR/RD	UNLOCK RELAY OUTPUT
2	-	-
3	F136 20VT/WT	LOCK RELAY OUTPUT

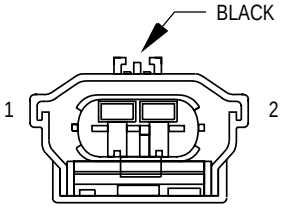

LOW COOLANT LEVEL SWITCH (DIESEL)

CAV	CIRCUIT	FUNCTION
1	G18 20BK/PK	COOLANT LEVEL SWITCH SENSE
2	Z1 20BK	GROUND

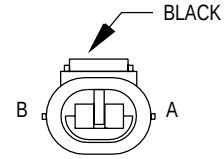

LOW NOTE HORN

CAV	CIRCUIT	FUNCTION
A	X2 18DG/RD	GROUND
B	Z1 18BK	HORN RELAY OUTPUT

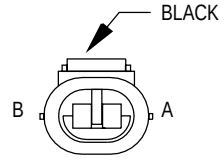

LOW WASHER FLUID SWITCH

CAV	CIRCUIT	FUNCTION
A	Z1 20BK	GROUND
B	G29 20BK/TN	WASHER FLUID SWITCH SENSE

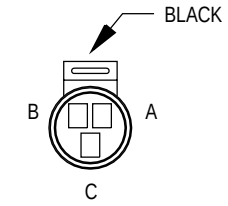

MANIFOLD ABSOLUTE PRESSURE SENSOR (2.4L/3.3L/3.8L)

CAV	CIRCUIT	FUNCTION
A	K4 18BK/LB	SENSOR GROUND
B	K6 18VT/WT	5 VOLT SUPPLY
C	K1 18DG/RD	MAP SENSOR SIGNAL

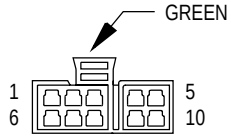

MEMORY POWER SEAT SWITCH

CAV	CIRCUIT	FUNCTION
1	Z1 20BK	GROUND
2	P40 22GY/LB	RECLINER SWITCH TO MEMORY MODULE (SEAT BACK UP)
3	P17 22RD/LB	SEAT HORIZONTAL (REARWARD)
4	P48 22GY/WT	SEAT RECLINER (REARWARD)
5	P9 20RD	FUSED B (+)
6	P15 22YL/LB	SEAT HORIZONTAL (FORWARD)
7	P19 22YL/LG	SEAT FRONT VERTICAL (UP)
8	P11 22YL/WT	SEAT REAR VERTICAL (UP)
9	P13 22RD/WT	SEAT REAR VERTICAL (DOWN)
10	P21 22RD/LG	SEAT FRONT VERTICAL (DOWN)

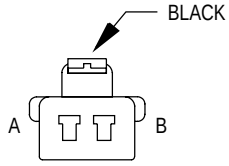

MEMORY SEAT FRONT VERTICAL MOTOR

CAV	CIRCUIT	FUNCTION
A	P121 14RD/LG	SEAT FRONT VERTICAL (DOWN)
B	P119 14YL/LG	SEAT FRONT VERTICAL (UP)

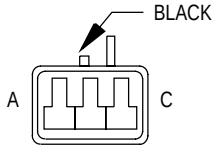

MEMORY SEAT FRONT VERTICAL POSITION SENSOR

CAV	CIRCUIT	FUNCTION
A	P29 20BR/WT	5 VOLT SUPPLY
B	P26 22BR	SEAT FRONT VERTICAL POSITION SENSE
C	P28 20BR/RD	SEAT POSITION SENSE COMMON

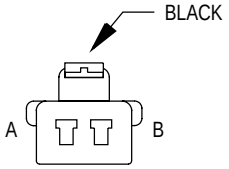

MEMORY SEAT HORIZONTAL MOTOR

CAV	CIRCUIT	FUNCTION
A	P115 14YL/LB	SEAT HORIZONTAL (FORWARD)
B	P117 14RD/LB	SEAT HORIZONTAL (REARWARD)

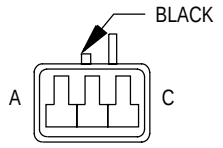

MEMORY SEAT HORIZONTAL POSITION SENSOR

CAV	CIRCUIT	FUNCTION
A	P28 20BR/RD	SEAT POSITION SENSE COMMON
B	P25 22VT/RD	SEAT HORIZONTAL POSITION SENSE
C	P29 20BR/WT	5 VOLT SUPPLY

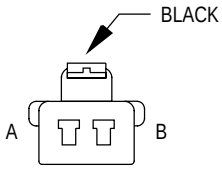

MEMORY SEAT REAR VERTICAL MOTOR

CAV	CIRCUIT	FUNCTION
A	P111 14YL/WT	SEAT REAR VERTICAL (UP)
B	P113 14RD/WT	SEAT REAR VERTICAL (DOWN)

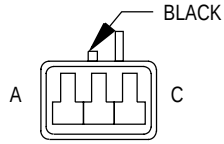

MEMORY SEAT REAR VERTICAL POSITION SENSOR

CAV	CIRCUIT	FUNCTION
A	P28 20BR/RD	SEAT POSITION SENSE COMMON
B	P27 22LB/RD	SEAT REAR VERTICAL POSITION SENSE
C	P29 20BR/WT	5 VOLT SUPPLY

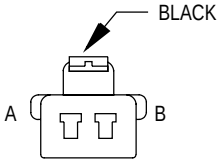

MEMORY SEAT RECLINER MOTOR

CAV	CIRCUIT	FUNCTION
A	P43 14GY/LB	SEAT RECLINER (REARWARD)
B	P41 14GY/WT	SEAT RECLINER (FORWARD)

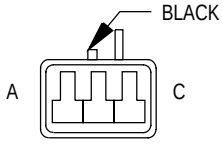

MEMORY SEAT RECLINER POSITION SENSOR

CAV	CIRCUIT	FUNCTION
A	P28 20BR/RD	SEAT POSITION SENSE COMMON
B	P47 22LB	SEAT RECLINER POSITION SENSE
C	P29 20BR/WT	5 VOLT SUPPLY

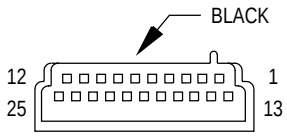

MEMORY SEAT/MIRROR MODULE - C1

CAV	CIRCUIT	FUNCTION
1	P69 20WT/RD	LEFT MIRROR POSITION (GROUND)
2	P64 20YL/OR	LEFT MIRROR POSITION (VERTICAL)
3	P65 20DB/YL	LEFT MIRROR POSITION (HORIZONTAL)
4	-	-
5	-	-
6	-	-
7	-	-
8	P22 20PK/BK	MEMORY SET
9	-	-
10	P73 20YL/PK	LEFT MIRROR (COMMON)
11	P71 20YL	LEFT MIRROR (VERTICAL)
12	P75 20DB/WT	LEFT MIRROR (HORIZONTAL)
13	P66 20WT/BK	RIGHT MIRROR POSITION (GROUND)
14	P67 20YL/RD	RIGHT MIRROR POSITION (VERTICAL)
15	P68 20DG/RD	RIGHT MIRROR POSITION (HORIZONTAL)
16	M1 20PK	FUSED B (+)
17	-	-
18	-	-
19	G96 20LG/RD	RKE INTERFACE
20	P23 20PK/RD	MEMORY NO. 1
21	P24 20PK/WT	MEMORY NO. 2
22	-	-
23	P70 20WT	RIGHT MIRROR (COMMON)
24	P72 20YL/BK	RIGHT MIRROR (VERTICAL)
25	P74 20DB	RIGHT MIRROR (HORIZONTAL)

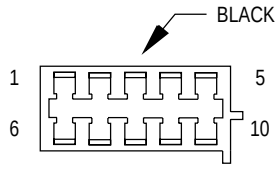

MEMORY SEAT/MIRROR MODULE - C2

CAV	CIRCUIT	FUNCTION
1	P117 14RD/LB	SEAT HORIZONTAL (REARWARD)
2	P115 14YL/LB	SEAT HORIZONTAL (FORWARD)
3	P111 14YL/WT	SEAT REAR VERTICAL (UP)
4	P43 14GY/LB	SEAT RECLINER (REARWARD)
5	P119 14YL/LG	SEAT FRONT VERTICAL (UP)
6	P113 14RD/WT	SEAT REAR VERTICAL (DOWN)
7	Z1 14BK	GROUND
8	F35 14RD	FUSED B (+)
9	P41 14GY/WT	SEAT RECLINER (FORWARD)
10	P121 14RD/LG	SEAT FRONT VERTICAL (DOWN)

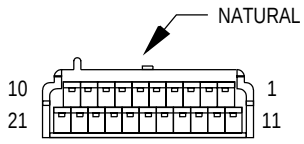

MEMORY SEAT/MIRROR MODULE - C3

CAV	CIRCUIT	FUNCTION
1	P21 22RD/LG	SEAT FRONT VERTICAL (DOWN)
2	P13 22RD/WT	SEAT REAR VERTICAL (DOWN)
3	P17 22RD/LB	SEAT HORIZONTAL (REARWARD)
4	P48 22GY/WT	SEAT RECLINER (REARWARD)
5	-	-
6	-	-
7	P27 22LB/RD	SEAT REAR VERTICAL POSITION SENSE
8	P26 22BR	SEAT FRONT VERTICAL POSITION SENSE
9	-	-
10	P28 20BR/RD	SEAT POSITION SENSE COMMON
11	P9 20RD	FUSED B (+) -
12	P19 22YL/LG	SEAT FRONT VERTICAL (UP)
13	P11 22YL/WT	SEAT REAR VERTICAL (UP)
14	P15 22YL/LB	SEAT HORIZONTAL (FORWARD)
15	P40 22GY/LB	SEAT RECLINER (FORWARD)
16	-	-
17	P47 22LB	SEAT RECLINER POSITION SENSE
18	P25 22VT/RD	SEAT HORIZONTAL POSITION SENSE
19	-	-
20	P29 20BR/WT	6 VOLT SUPPLY
21	-	-

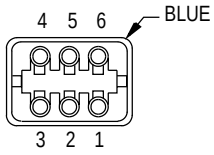

MEMORY SET SWITCH

CAV	CIRCUIT	FUNCTION
1	-	-
2	-	-
3	Z1 20BK	GROUND
4	P24 20PK/WT	MEMORY NO. 1
5	P22 20PK/BK	MEMORY SET
6	P23 20PK/RD	MEMORY NO. 2

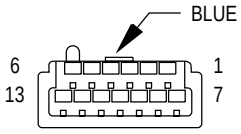

MESSAGE CENTER (LHD)

CAV	CIRCUIT	FUNCTION
1	L34 20RD/OR	FUSED HIGH BEAM RELAY OUTPUT
2	L63 18DG/RD	LEFT TURN SIGNAL
3	Z1 20BK	GROUND
4	L62 18BR/RD	RIGHT TURN SIGNAL
5	G19 20LG/OR	ABS WARNING LAMP DRIVER
6	G2 22VT	ENGINE TEMPERATURE WARNING LAMP DRIVER
7	G3 20BK/PK	SERVICE ENGINE SOON INDICATOR LAMP DRIVER
7	G85 20OR/BK *	WAIT-TO START WARNING LAMP DRIVER
8	G6 22GY	ENGINE OIL PRESSURE SWITCH SENSE
9	G9 20GY/BK	RED BRAKE WARNING LAMP DRIVER
10	V23 18BR/PK	FUSED IGNITION (ST-RUN)
11	R41 18BK/TN	AIRBAG WARNING LAMP DRIVER
12	M1 20PK	FUSED B (+)
13	G69 22BK/OR	VTSS INDICATOR LAMP DRIVER

* DIESEL

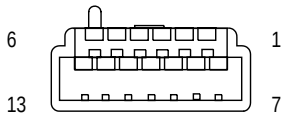

MESSAGE CENTER (RHD)

CAV	CIRCUIT	FUNCTION
1	G2 22VT	ENGINE TEMPERATURE WARNING LAMP DRIVER
2	G19 20LG/OR	ABS WARNING LAMP DRIVER
3	L63 18DG/RD	LEFT TURN SIGNAL
4	Z1 20BK	GROUND
5	L62 18BR/RD	RIGHT TURN SIGNALS
6	L34 20RD/OR	FUSED RIGHT HIGH BEAM OUTPUT
7	G69 22BK/OR	VTSS INDICATOR LAMP DRIVER
8	M1 20PK	FUSED B(+)
9	R41 18BK/OR	AIRBAG WARNING LAMP DRIVER
10	V23 18BR/PK	FUSED IGNITION (ST-RUN)
11	G9 20GY/BK	RED BRAKE WARNING LAMP DRIVER
12	G6 22GY	ENGINE OIL PRESSURE SWITCH SENSE
13	G3 20BK/PK	SERVICE ENGINE SOON INDICATOR LAMP DRIVER

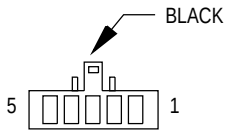

MODE DOOR ACTUATOR

CAV	CIRCUIT	FUNCTION
1	C34 20DB/WT	DOOR COMMON
2	C26 20PK/DB	5 VOLT SUPPLY
3	C37 20YL	MODE DOOR FEEDBACK SIGNAL
4	C57 20DB/GY	SENSOR GROUND
5	C35 20DG/YL	MODE DOOR DRIVER

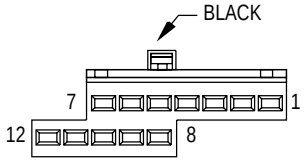

MULTI-FUNCTION SWITCH

CAV	CIRCUIT	FUNCTION
1	L91 22DB/PK	COMBO FLASHER SWITCHED GROUND
2	-	-
3	L302 22LB/YL	LEFT TURN SIGNAL SENSE
4	L305 22LB/WT	RIGHT TURN SIGNAL SENSE
5	V16 20WT	HIGH SPEED RELAY DRIVER
6	V52 20DG//YL	WIPER MUX SIGNAL
7	F1 20DB	FUSED B(+)
8	Z1 18BK	GROUND
9	L93 22PK	HIGH/LOW BEAM RELAY CONTROL
10	L94 20OR/WT	LOW BEAM RELAY CONTROL
11	V10 20BR	FRONT WASHER MOTOR CONTROL
12	L324 22WT/LG	HIGH BEAM RELAY CONTROL

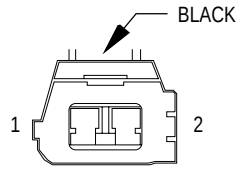

NEEDLE MOVEMENT SENSOR (DIESEL)

CAV	CIRCUIT	FUNCTION
1	K67 18BR/BK	NEEDLE MOVEMENT SENSOR (+)
2	K68 18LG/YL	NEEDLE MOVEMENT SENSOR (-)

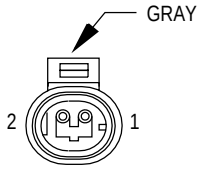

OUTPUT SHAFT SPEED SENSOR

CAV	CIRCUIT	FUNCTION
1	T13 18DB/BK	SPEED SENSOR GROUND
2	T14 18LG/WT	OUTPUT SHAFT SPEED SIGNAL (+)

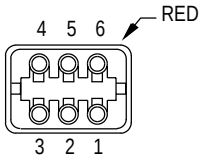

OVERHEAD CONSOLE

CAV	CIRCUIT	FUNCTION
1	D2 18WT/BK	CCD BUS(-)
2	G32 20BK/LB	SENSOR GROUND
3	Z2 18BK/LG	GROUND
4	V23 18BR/PK	FUSED IGN. (ST-RUN)
5	G31 20VT/LG	AMBIENT TEMPERATURE SENSOR SIGNAL
6	D1 18VT/BR	CCD BUS(+)

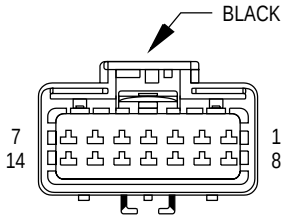

P30

CAV	CIRCUIT
1	C26 22PK/DB
2	C57 22DB/GY
3	C32 22GY/DB
4	C33 22DB/RD
5	C34 22DB/WT
6	C35 22DG/YL
7	C36 22RD/WT
8	C37 22YL
9	C61 22DB
10	C62 22DB/PK
11	C102 22LG
12	C21 22DB/OR
13	-
14	-

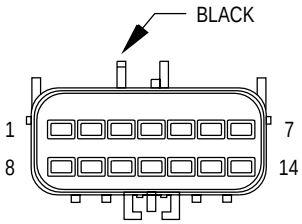

J01D

CAV	CIRCUIT
1	C26 20PK/DB
2	C57 20DB/GY
3	C32 20GY/DB
4	C33 20DB/RD
5	C34 20DB/WT
6	C35 20DG/YL
7	C36 20RD/WT
8	C37 20YL
9	C61 20DB*
10	C62 20DB/PK*
11	C102 20LG*
12	C21 20DB/OR
13	-
14	-

* REAR A/C

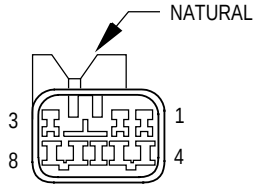

P50
(RHD)

CAV	CIRCUIT
1	D1 20VT/BR
2	G96 22LG/RD
3	D2 20WT/BK
4	F11 20RD/WT
5	L91 20DB/PK
6	X12 20RD/WT
7	M1 22PK
8	Z1 18BK

CAV	CIRCUIT
1	-
2	-
3	-
4	-
5	-
6	-
7	-
8	-

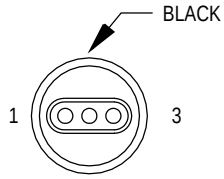

PARK/NEUTRAL
POSITION SWITCH
(EATX)

CAV	CIRCUIT	FUNCTION
1	L1 18VT/BK	BACK-UP LAMP RELAY OUTPUT
2	T41 18BK/WT	PARK/NEUTRAL POSITION SWITCH SENSE
3	F20 18WT	FUSED IGNITION (RUN)

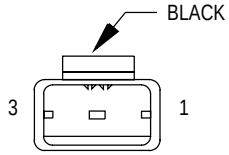

PARK/NEUTRAL
POSITION SWITCH
(MTX)

CAV	CIRCUIT	FUNCTION
1	T3 18VT	PARK/NEUTRAL POSITION SWITCH OUTPUT
2	T41 18BK/WT	PARK/NEUTRAL POSITION SWITCH SENSE
3	F11 18RD/WT	FUSED IGNITION (ST-RUN-OFF)

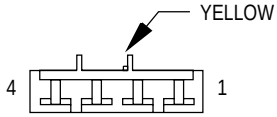

PASSENGER
AIRBAG SQUIB

CAV	CIRCUIT	FUNCTION
1	R44 18DG/YL	PASSENGER AIRBAG LINE NO. 2
2	R42 18BK/YL	PASSENGER AIRBAG LINE NO. 1
3	-	-
4	-	-

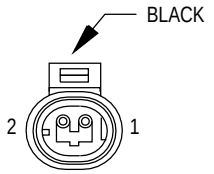

PASSENGER DOOR
ARM/DISARM SWITCH

CAV	CIRCUIT	FUNCTION
1	Z2 20BK/LG	GROUND
2	P96 20WT/LG	PASSENGER DOOR SWITCH MUX

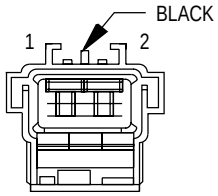

PASSENGER DOOR COURTESY LAMP

CAV	CIRCUIT	FUNCTION
1	M11 20PK/LB	COURTESY LAMP RELAY OUTPUT
2	Z1 20BK	GROUND
	Z1 20BK	

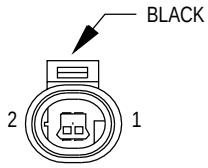

PASSENGER DOOR LOCK MOTOR

CAV	CIRCUIT	FUNCTION
1	F136 20VT/YL	FUSED DOOR UNLOCK RELAY OUTPUT
2	F133 20BR	FUSED DOOR LOCK RELAY OUTPUT

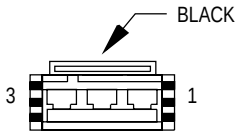

PASSENGER DOOR LOCK SWITCH

CAV	CIRCUIT	FUNCTION
1	E2 20OR	PANEL LAMPS FEED
	E2 20OR	
2	P96 20WT/LG	PASSENGER DOOR SWITCH MUX
	P96 20WT/LG*	
3	Z2 20BK/LG	GROUND
	Z2 20BK/LG*	

PASSENGER HEATED SEAT BACK

CAV	CIRCUIT	FUNCTION
A	P88 18RD/WT	HEATED SEAT DRIVER
B	Z1 18BK	GROUND

PASSENGER HEATED SEAT CUSHION

CAV	CIRCUIT	FUNCTION
A	P87 18RD/WT	HEATED SEAT DRIVER
B	P88 18RD/WT	HEATED SEAT DRIVER
C	P89 20BK/RD	HEATED SEAT BACK
D	Z1 18BK	GROUND

PASSENGER HEATED SEAT MODULE

CAV	CIRCUIT	FUNCTION
A	P87 18RD/WT	HEATED SEAT DRIVER
B	P86 20VT	HEATED SEAT TEMPERATURE SENSOR
C	P8 20WT/BK	PASSENGER HEATED SEAT SWITCH
D	F35 18RD	FUSED B(+)
E	P89 20BK/RD	HEATED SEAT BACK
F	Z1 18BK	GROUND

* RKE

PASSENGER HEATED SEAT SWITCH

CAV	CIRCUIT	FUNCTION
A	P86 20VT	HEATED SEAT TEMPERATURE SENSOR
B	F20 20WT	FUSED IGNITION (RUN)
C	-	-
D	F20 20WT	FUSED IGNITION (RUN)
E	Z1 18BK	GROUND
F	P8 20WT/BK	PASSENGER HEATED SEAT SWITCH

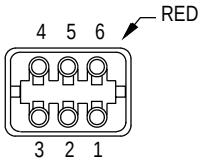

PASSENGER POWER MIRROR - C1

CAV	CIRCUIT	FUNCTION
1	P74 20DB	MIRROR SWITCH OUTPUT (HORIZONTAL)
2	P72 20YL/BK	MIRROR SWITCH OUTPUT (VERTICAL)
3	P70 20WT	MIRROR SWITCH COMMON
4	C16 20LB/YL	FUSED B(+)
5	Z1 20BK	GROUND
6	-	-

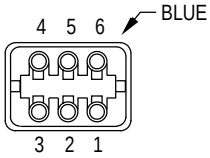

PASSENGER POWER MIRROR - C2

CAV	CIRCUIT	FUNCTION
1	P67 20YL/RD	PASSENGER MIRROR POSITION (VERTICAL)
2	P66 20WT/BK	PASSENGER MIRROR POSITION COMMON
3	P68 20DG/RD	PASSENGER MIRROR POSITION (HORIZONTAL)
4	-	-
5	P159 20DG*	PASSENGER MIRROR UNFOLD SIGNAL
6	P160 20LB*	PASSENGER MIRROR FOLD SIGNAL

* BUILT-UP-EXPORT
** RKE

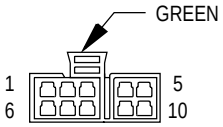

PASSENGER POWER SEAT SWITCH

CAV	CIRCUIT	FUNCTION
1	Z1 14BK	GROUND
2	P44 14GY/LB	SEAT RECLINER (FORWARD)
3	P16 14RD/LB	SEAT HORIZONTAL (REARWARD)
4	P42 14GY/WT	SEAT RECLINER (REARWARD)
5	F35 14RD	FUSED (B+)
6	P14 14YL/LB	SEAT HORIZONTAL (FORWARD)
7	P20 14RD/LG	SEAT FRONT VERTICAL (DOWN)
8	P12 14RD/WT	SEAT REAR VERTICAL (DOWN)
9	P10 14YL/WT	SEAT REAR VERTICAL (UP)
10	P18 14YL/LG	SEAT FRONT VERTICAL (UP)

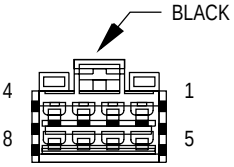

PASSENGER POWER WINDOW SWITCH

CAV	CIRCUIT	FUNCTION
1	F55 12TN/DG	FUSED IGNITION SWITCH OUTPUT (RUN/ACC)
2	Q26 12VT/WT	RIGHT FRONT WINDOW (DOWN)
3	Q16 12BR/WT	RIGHT FRONT WINDOW (UP)
4	-	-
5	Q22 14VT	RIGHT FRONT WINDOW (DOWN)
6	E2 20OR	PANEL LAMPS FEED
7	Z1 20BK	GROUND
8	Q12 14BR	RIGHT FRONT WINDOW (UP)

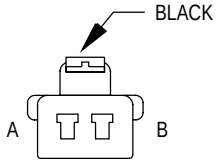

PASSENGER SEAT FRONT VERTICAL MOTOR

CAV	CIRCUIT	FUNCTION
A	P18 14YL/LG	SEAT FRONT VERTICAL (UP)
B	P20 14RD/LG	SEAT FRONT VERTICAL (DOWN)

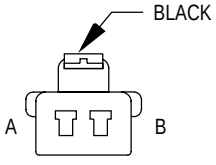

PASSENGER SEAT HORIZONTAL MOTOR

CAV	CIRCUIT	FUNCTION
A	P16 14RD/LB	SEAT HORIZONTAL (REARWARD)
B	P14 14YL/LB	SEAT HORIZONTAL (FORWARD)

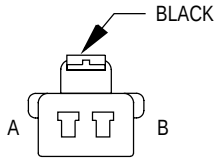

PASSENGER SEAT REAR VERTICAL MOTOR

CAV	CIRCUIT	FUNCTION
A	P12 14RD/WT	SEAT REAR VERTICAL (DOWN)
B	P10 14YL/WT	SEAT REAR VERTICAL (UP)

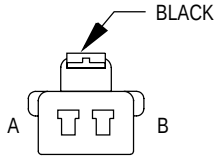

PASSENGER SEAT RECLINER MOTOR

CAV	CIRCUIT	FUNCTION
A	P42 14GY/WT	SEAT RECLINER (REARWARD)
B	P44 14GY/LB	SEAT RECLINER (FORWARD)

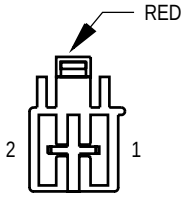

PASSENGER WINDOW MOTOR

CAV	CIRCUIT	FUNCTION
1	Q11 16LG	DRIVER WINDOW (UP)
2	Q21 16WT	DRIVER WINDOW (DOWN)

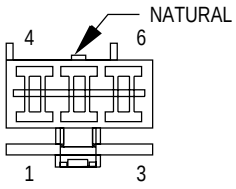

POWER DISTRIBUTION CENTER - C1

CAV	CIRCUIT	FUNCTION
1	-	-
2	-	-
3	C71 12DB	BLOWER MOTOR FEED FROM ATC/RELAY
4	L7 12BK/YL	TAIL, LICENSE, SIDE MARKER LAMP, PARK LAMP FEED
5	-	-
6	A4 12BK/RD	FUSED B (+)

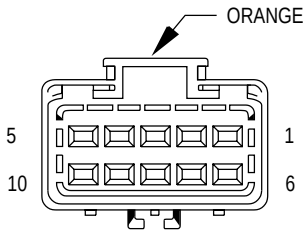

POWER DISTRIBUTION CENTER - C2

CAV	CIRCUIT	FUNCTION
1	-	-
2	F41 20PK/VT	FUSED B (+)
3	F45 20YL/RD •	FUSED IGNITION SWITCH OUTPUT (START)
3	T141 20YL/RD ••	CLUTCH INTERLOCK SWITCH
4	X4 20GY/OR	HORN RELAY CONTROL
5	F20 20WT	IGNITION FEED FOR EVIC
6	F87 18WT/BK	FUSED IGN. (ST-RUN)
7	A141 16DG/WT	FUEL PUMP RELAY OUTPUT
8	X2 18DG/RD	HORN RELAY OUTPUT
9	F1 20DB	WIPE FEED
10	F30 16RD	CIGAR AND ACCESSORY RELAY OUTPUT

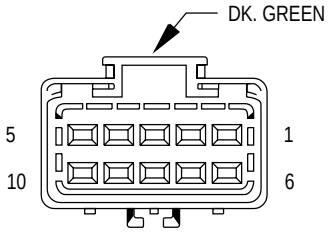

POWER DISTRIBUTION CENTER - C3

CAV	CIRCUIT	FUNCTION
1	L44 20VT/RD	FUSED LOW BEAM RELAY OUTPUT
2	L324 20WT/LG	HIGH BEAM RELAY DRIVER
3	-	-
4	-	-
5	M1 20PK	FUSED B (+)
6	A20 12RD/DB	FUSED B (+)
7	L94 20OR/WT*	LOW BEAM RELAY DRIVER
	L193 20OR/WT**	LOW BEAM RELAY DRIVER
8	F32 18PK/DB	FUSED B (+)
9	-	-
10	L97 18PK/DB	PARK LAMP RELAY CONTROL

• EATX
•• MTX
* DODGE/PLYMOUTH OR BUILT-UP-EXPORT
** CHRYSLER (PREMIUM)

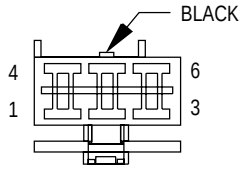

POWER DISTRIBUTION CENTER - C4

CAV	CIRCUIT	FUNCTION
1	A22 12BK/OR	IGNITION SWITCH RUN ONLY FEED
2	Z1 18BK	GROUND
3	A1 12RD	FUSED B (+)
4	-	-
5	A2 12PK/BK	BATTERY FEED TO IGNITION SWITCH
6	A10 12RD/DG	FUSED LINK TO ABS PUMP MOTOR RELAY

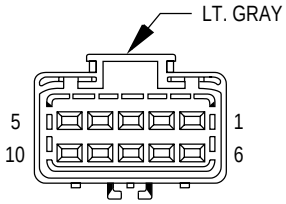

POWER DISTRIBUTION CENTER - C5

CAV	CIRCUIT	FUNCTION
1	L33 20RD	HIGH BEAM RELAY OUTPUT
2	F14 20LG/YL*	FUSED IGNITION SWITCH OUTPUT (ST-RUN)
	F14 18LG/YL**	FUSED IGNITION SWITCH OUTPUT (ST-RUN)
3	V3 12BR/WT	WIPER HIGH/LOW RELAY OUTPUT (LOW)
4	V4 12RD/YL	WIPER HIGH/LOW RELAY OUTPUT (HIGH)
5	V16 20WT	WIPER HIGH/LOW RELAY DRIVER
6	L34 20RD/OR	HIGH BEAM RELAY OUTPUT
	L34 20RD/OR	HIGH BEAM RELAY OUTPUT
7	V14 18RD/VT	WIPER ON RELAY DRIVER
8	L43 18VT	LOW BEAM RELAY OUTPUT
9	L9 18BK/WT	FUSED HAZARD FLASHER FEED (DEDICATED)
10	F23 20DB/YL*	FUSED IGNITION SWITCH OUTPUT (RUN)
	F23 18DB/YL**	FUSED IGNITION SWITCH OUTPUT (RUN)

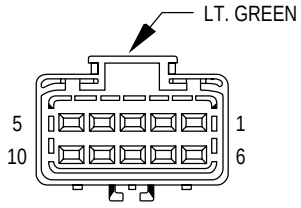

POWER DISTRIBUTION CENTER - C6

CAV	CIRCUIT	FUNCTION
1	F87 18BK/WT ●●	FUSED IGNITION "C" (7.5A)
1	A142 18DG/OR ●	FUSED IGNITION "C" (7.5A)
2	C3 18DB/BK	A/C COMPRESSOR CLUTCH RELAY OUTPUT
3	K31 18BR	FUEL PUMP RELAY CONTROL
3	Z1 20BK ●	GROUND
4	K90 18TN	ENGINE STARTER MOTOR RELAY CONTROL
5	A142 18DG/OR	ASD RELAY OUTPUT
6	F87 18WT/BK	FUSED IGNITION SWITCH OUTPUT (RUN/START)
7	C13 18DB/OR ●●	A/C COMPRESSOR CLUTCH RELAY CONTROL
7	C13 20DB/OR ●	A/C COMPRESSOR CLUTCH RELAY CONTROL
8	K51 18DB/YL ●●	ASD RELAY CONTROL
8	K51 20DB/YL ●	ASD RELAY CONTROL
9	A14 18RD/WT ●●	FUSED B(+)
10	-	-

* EXCEPT BUILT-UP-EXPORT
** BUILT-UP-EXPORT
●DIESEL
●●GAS

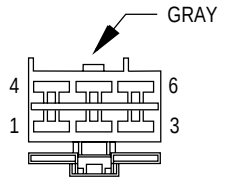

POWER DISTRIBUTION CENTER - C7

CAV	CIRCUIT	FUNCTION
1	-	-
2	-	-
3	T40 12BR	STARTER MOTOR RELAY OUTPUT
4	A17 12RD/BK*	FUSED B(+)
5	-	-
6	A16 12GY	FUSED B(+)

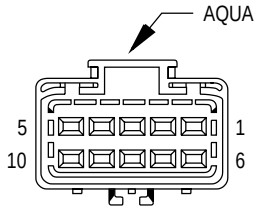

POWER DISTRIBUTION CENTER - C8

CAV	CIRCUIT	FUNCTION
1	-	-
2	T16 18RD	TRANSMISSION CONTROL RELAY OUTPUT
3	T15 18LG	TRANSMISSION CONTROL RELAY CONTROL
4	Z16 18BK	GROUND
5	-	-
6	-	-
7	F45 18YL/RD	FUSED B(+)
8	-	-
9	-	-
10	A5 18RD/DB	FUSED B(+)

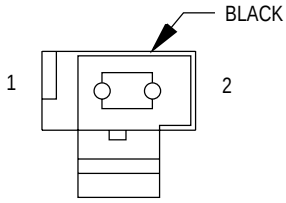

POWER FOLDING MIRROR SWITCH (BUILT-UP-EXPORT)

CAV	CIRCUIT	FUNCTION
1	P136 20YL	POWER FOLDING MIRROR INPUT
2	Z1 20BK	GROUND

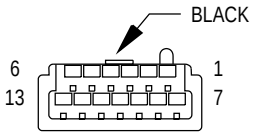

POWER MIRROR SWITCH

CAV	CIRCUIT	FUNCTION
1	P70 20WT	RIGHT COMMON
2	-	-
3	-	-
4	-	-
5	E2 20OR	PANEL LAMPS FEED
6	P73 20YL/PK	LEFT COMMON
7	P75 20DB/WT	LEFT HORIZONTAL
8	P74 20DB	RIGHT HORIZONTAL
9	F41 20PK/VT	FUSED B (+)
10	-	-
11	Z1 20BK	GROUND
12	P71 20YL	LEFT VERTICAL
13	P72 20YL/BK	RIGHT VERTICAL

* DIESEL

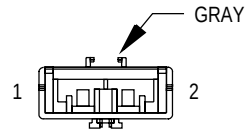

POWER SEAT CIRCUIT BREAKER

CAV	CIRCUIT	FUNCTION
1	A3 12PK/BK	FUSED B(+)
2	F35 14RD	FUSED B(+)
	F35 14RD*	

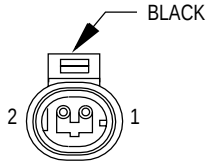

POWER STEERING PRESSURE SWITCH (2.0L/2.4L)

CAV	CIRCUIT	FUNCTION
1	K10 18DB/OR	POWER STEERING PRESSURE SWITCH SENSE
2	Z1 18BK	GROUND

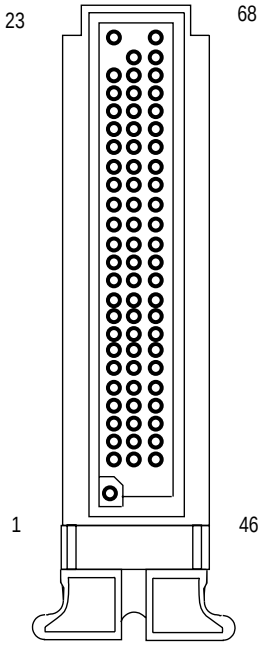

POWERTRAIN CONTROL MODULE (DIESEL)

CAV	CIRCUIT	FUNCTION
1	Z12 16BK/TN	GROUND
2	K159 20VT/RD	ENGINE SPEED SENSOR SIGNAL
3	K90 20TN	ENGINE STARTER MOTOR RELAY CONTROL
4	K140 18TN/WT	FUEL QUANTITY ACTUATOR SIGNAL
5	K140 18TN/WT	FUEL QUANTITY ACTUATOR SIGNAL
6	C24 20DB/PK	LOW SPEED RADIATOR FAN RELAY NO. 2 CONTROL
7	K57 20LG/OR	CONTROL SLEEVE POSITION SENSOR
8	K24 18GY/BK	ENGINE SPEED SENSOR FEED
9	-	-
10	-	-
11	K68 20LG/YL	NEEDLE MOVEMENT SENSOR RETURN
12	K67 20BR/BK	NEEDLE MOVEMENT SENSOR SIGNAL
13	C18 20DB	A/C PRESSURE SWITCH SIGNAL
14	K2 20TN/BK	ENGINE COOLANT TEMPERATURE SENSOR SIGNAL
15	K22 20OR/DB	ACCELERATOR PEDAL SENSOR SIGNAL
16	-	-
17	K119 20LG/BK	CLUTCH SWITCH SIGNAL
18	-	-
19	K7 20OR	5 VOLT SUPPLY
20	K29 20WT/PK	BRAKE SWITCH SENSE
21	K3 20BK/VT	ENGINE SPEED SENSOR RETURN
22	-	-
23	A142 16DG/OR	DIESEL POWER RELAY OUTPUT
24	Z12 16BK/TN	GROUND
25	K35 20GY/YL	EGR SOLENOID CONTROL
26	G85 20OR/BK	GLOW PLUG LAMP DRIVER
27	V38 20LB/RD	SPEED CONTROL LAMP DRIVER
28	C13 20DB/OR	A/C COMPRESSOR CLUTCH RELAY CONTROL
29	K134 20LB/BK	SLEEVE POSITION SENSOR
30	-	-
31	-	-
32	-	-
33	K4 20BK/LB	SENSOR GROUND
34	-	-
35	-	-
36	V37 20RD/LG	SPEED CONTROL SWITCH SIGNAL
37	C103 20DG/LB	A/C SWITCH SIGNAL
38	F87 18WT/BK	FUSED IGNITION (ST-RUN)
39	-	-
40	K1 20DG/RD	BOOST PRESSURE SENSOR SIGNAL

* MEMORY SEAT

CONTINUED ON NEXT PAGE

(CONTINUED)

CAV	CIRCUIT	FUNCTION
41	K9 20LB	5 VOLT SUPPLY
42	K51 20DB/YL	DIESEL POWER RELAY
43	G7 18WT/OR	VEHICLE SPEED SENSOR SIGNAL
44	L50 18WT/TN	STOP LAMP SWITCH SIGNAL
45	A142 16DG/OR	DIESEL POWER RELAY OUTPUT
46	Z12 16BK/TN	GROUND
47	-	-
48	C137 20YL	HIGH SPEED RADIATOR FAN RELAY NO. 1 AND 3 CONTROL
49	K140 18TN/WT	SLEEVE POSITION SENSOR (+)
50	K152 20WT/DG	FUEL TIMING SOLENOID CONTROL
51	K126 20LG	SLEEVE POSITION SENSOR (+)
52	K135 20WT/BK	SHUT DOWN SOLENOID CONTROL
53	K153 18OR/DG	FUEL SHUT OFF SIGNAL
54	-	-
55	K167 20BR/YL	ACCELERATOR PEDAL SENSOR GROUND
56	-	-
57	K6 20VT/WT	5 VOLT SUPPLY
58	-	-
59	G55 20OR/BK	ENGINE DISABLE SIGNAL
60	-	-
61	D21 20PK	SCI TRANSMIT
62	-	-
63	K156 20GY	FUEL TEMPERATURE SENSOR SIGNAL
64	K21 20BK/RD	INTAKE AIR TEMPERATURE SENSOR SIGNAL
65	K151 20WT	LOW IDLE POSITION SWITCH SIGNAL
66	-	-
67	-	-
68	A142 16DG/OR	DIESEL POWER RELAY OUTPUT

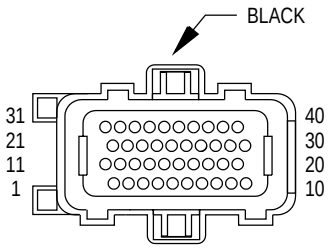

POWERTRAIN CONTROL MODULE - C1

CAV	CIRCUIT	FUNCTION
1	-	-
2	K18 18RD/YL	IGNITION COIL NO. 3 DRIVER (3.3L/3.8L)
3	K17 18DB/TN	IGNITION COIL NO. 2 DRIVER
4	-	-
5	V32 18YL/RD	SPEED CONTROL ON/OFF SWITCH SENSE
6	A142 18DG/OR	AUTOMATIC SHUT DOWN RELAY OUTPUT
7	K13 18YL/WT	INJECTOR NO. 3 DRIVER
8	K20 18DG	GENERATOR FIELD DRIVER
9	-	-
10	Z12 18BK/TN	GROUND
11	K19 18GY/RD	IGNITION COIL NO. 1 DRIVER
12	-	-
13	K11 18WT/DB	INJECTOR NO. 1 DRIVER
14	K58 18BR/DB	INJECTOR NO. 6 DRIVER (3.3L/3.8L)
15	K38 18GY	INJECTOR NO. 5 DRIVER (3.3L/3.8L)
16	K14 18LB/BR	INJECTOR NO. 4 DRIVER
17	K12 18TN/WT	INJECTOR NO. 2 DRIVER
18	-	-
19	-	-
20	F87 18WT/BK	FUSED IGNITION SWITCH OUTPUT (ST-RUN)
21	-	-
22	G3 18BK/PK	SERVICE ENGINE SOON INDICATOR LAMP DRIVER
23	-	-
24	-	-
25	K42 18DB/LG	KNOCK SENSOR SIGNAL
26	K2 18TN/BK	ENGINE COOLANT TEMPERATURE SENSOR SIGNAL
27	-	-
28	-	-
29	-	-
30	K41 18BK/DG	HEATED OXYGEN SENSOR SIGNAL
31	K90 18TN	ENGINE STARTER MOTOR RELAY CONTROL
32	K24 18GY/BK	CRANKSHAFT POSITION SENSOR SIGNAL
33	K44 18TN/YL	CAMSHAFT POSITION SENSOR SIGNAL
34	-	-
35	K22 18OR/DB	THROTTLE POSITION SENSOR SIGNAL
36	K1 18DG/RD	MANIFOLD ABSOLUTE PRESSURE SENSOR SIGNAL
37	K21 18BK/RD*	INTAKE AIR TEMPERATURE SENSOR SIGNAL
38	C103 18DG/LB	A/C SWITCH SIGNAL
39	-	-
40	K35 18GY/YL	EGR SOLENOID CONTROL

* 2.0L

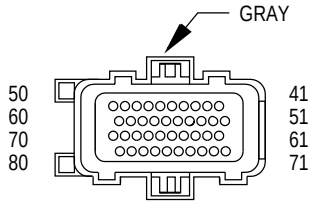

POWERTRAIN CONTROL MODULE - C2

CAV	CIRCUIT	FUNCTION
41	V37 18RD/LG	SPEED CONTROL SWITCH SIGNAL
42	C18 18DB	A/C PRESSURE SWITCH SIGNAL
43	K4 18BK/LB	SENSOR GROUND
44	K7 18OR	8 VOLT SUPPLY
45	-	-
46	A14 18RD/WT	FUSED B(+)
47	-	-
48	K40 18BR/WT	IDLE AIR CONTROL MOTOR NO. 3 DRIVER
49	K60 18YL/BK	IDLE AIR CONTROL MOTOR NO. 2 DRIVER
50	Z12 18BK/TN	GROUND
51	K141 18TN/WT	HEATED OXYGEN SENSOR SIGNAL
52	-	-
53	-	-
54	K50 18YL/WT*	FLEXIBLE FUEL SENSOR SIGNAL
55	-	-
56	V36 18TN/RD	SPEED CONTROL VACUUM SOLENOID CONTROL
57	K39 18GY/RD	IDLE AIR CONTROL MOTOR NO. 1 DRIVER
58	K59 18VT/BK	IDLE AIR CONTROL MOTOR NO. 4 DRIVER
59	D1 18VT/BR	CCD BUS (+)
60	D2 18WT/BK	CCD BUS (-)
61	K6 18VT/WT	5 VOLT SUPPLY
62	K29 18WT/PK	STOP LAMP SWITCH SENSE
63	T10 18YL/DG •	TORQUE MANAGEMENT REQUEST SENSE
64	C13 18DB/OR	A/C COMPRESSOR CLUTCH RELAY CONTROL
65	D21 18PK	SCI TRANSMIT
66	G7 18WT/OR	VEHICLE SPEED SENSOR SIGNAL
67	K51 18DB/YL	AUTOMATIC SHUT DOWN RELAY CONTROL
68	K52 18PK/BK	EVAP/PURGE SOLENOID CONTROL
69	-	-
70	K70 18VT/RD	PULSE WIDTH MODULATED PURGE CURRENT SENSE
71	-	-
72	K107 18YL/BK	EVAP LEAK DETECTION PUMP STROKE SENSE
73	K173 14LG/DB	RADIATOR FAN RELAY CONTROL
74	K31 18BR	FUEL PUMP RELAY CONTROL
75	D20 18LG	SCI RECEIVE
76	T41 18BR/YL •	TRANSMISSION RANGE SWITCH T41 SENSE
77	K106 18WT/DG	EVAP LEAK DETECTION PUMP SOLENOID CONTROL
78	-	-
79	-	-
80	V35 18LG/RD	SPEED CONTROL VENT SOLENOID CONTROL

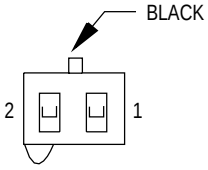

PRNDL FEED

CAV	CIRCUIT	FUNCTION
1	M1 20PK	FUSED B(+)
2	A81 20DG/RD	IGNITION SWITCH OUTPUT (OFF/RUN/START)

* 3.3L/3.8L ENGINE
• EATX

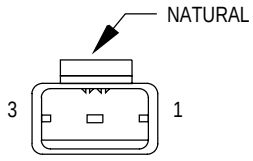

PRNDL SWITCH

CAV	CIRCUIT	FUNCTION
1	Z13 18BK/RD	GROUND
2	T42 18VT/WT	PRNDL SWITCH GROUND
3	T1 18LG/BK	PRNDL SWITCH SENSE

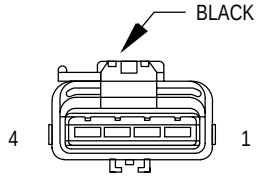

RADIATOR FAN DISCONNECT (DIESEL)

CAV	CIRCUIT	FUNCTION
1	Z1 12BK	GROUND
2	C27 12DB/PK	RADIATOR FAN RELAY CONTROL
3	C116 12LG/WT	HIGH SPEED RELAY OUTPUT
4	C25 12YL	RADIATOR FAN RELAY OUTPUT

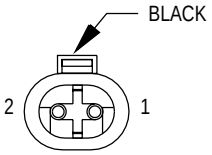

RADIATOR FAN NO. 1

CAV	CIRCUIT	FUNCTION
1	C23 12DG	LOW SPEED RADIATOR FAN RELAY OUTPUT
2	Z1 12BK	GROUND

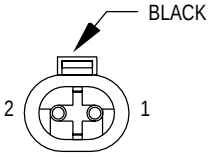

RADIATOR FAN NO.2

CAV	CIRCUIT	FUNCTION
1	C23 12DG	LOW SPEED RADIATOR FAN RELAY OUTPUT
2	Z1 12BK	GROUND

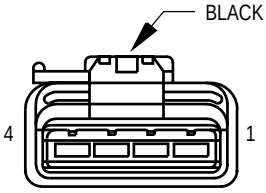

RADIATOR FAN RELAY (GAS)

CAV	CIRCUIT	FUNCTION
1	Z1 14BK	GROUND
2	K173 14LG/DB	RADIATOR FAN RELAY CONTROL
3	C23 12DG	LOW SPEED RADIATOR FAN RELAY OUTPUT
4	A16 12GY	FUSED B(+)

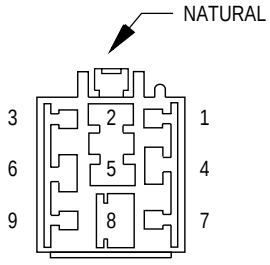

RADIATOR FAN RELAY NO. 1 (DIESEL)

CAV	CIRCUIT	FUNCTION
2	Z1 12BK	GROUND
4	A142 18DG/OR	AUTO SHUTDOWN RELAY OUTPUT
5	C27 12DB/PK	HIGH SPEED RADIATOR FAN RELAY CONTROL
6	C137 20YL	HIGH SPEED RADIATOR FAN RELAY CONTROL
8	C116 12LG/WT	HIGH SPEED RELAY OUTPUT

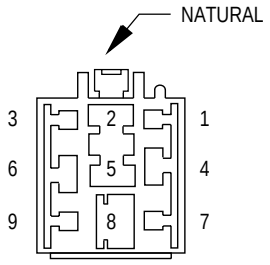

RADIATOR FAN RELAY NO. 2 (DIESEL)

CAV	CIRCUIT	FUNCTION
2	C25 12YL	RADIATOR FAN RELAY OUTPUT
4	A142 18DG/OR	AUTO SHUTDOWN RELAY OUTPUT
6	C24 20DB/PK	LOW SPEED RADIATOR FAN RELAY CONTROL
8	A16 12GY	FUSED B(+)

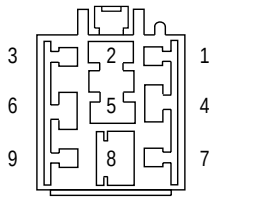

RADIATOR FAN RELAY NO. 3 (DIESEL)

CAV	CIRCUIT	FUNCTION
2	C27 12DB/PK	RADIATOR FAN RELAY CONTROL
4	A142 18DG/OR	AUTO SHUTDOWN RELAY OUTPUT
6	C137 20YL	HIGH SPEED RADIATOR FAN RELAY CONTROL
8	A17 12RD/BK	FUSED B(+)

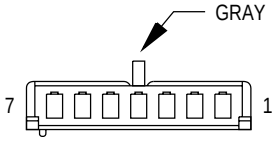

RADIO - C1

CAV	CIRCUIT	FUNCTION
1	-	-
2	X55 20BR/RD	LEFT DOOR SPEAKER (-)
	X55 20BR/RD*	LEFT DOOR SPEAKER (-)
3	X56 20DB/RD	RIGHT DOOR SPEAKER (-)
	X56 20DB/RD*	RIGHT DOOR SPEAKER (-)
4	E17 20YL/BK	STEP DIMMER SWITCH SENSE
5	E2 20OR	PANEL LAMPS FEED
6	X12 18RD/WT	FUSED IGNITION (RUN-ACC)
7	M1 20PK	FUSED B(+)

* PREMIUM

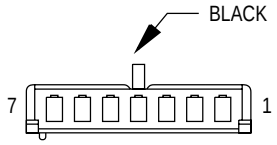

RADIO - C2

CAV	CIRCUIT	FUNCTION
1	X60 20RD/DG	RADIO 12 VOLT OUTPUT
2	X51 20BR/YL	LEFT REAR SPEAKER (+)
3	X52 20DB/WT	RIGHT REAR SPEAKER (+)
4	X53 20DG	LEFT DOOR SPEAKER (+)
	X53 20DG*	LEFT DOOR SPEAKER (+)
5	X54 20VT	RIGHT DOOR SPEAKER (+)
	X54 20VT*	RIGHT DOOR SPEAKER (+)
6	X57 20BR/LB	LEFT REAR SPEAKER (-)
7	X58 20DB/OR	RIGHT REAR SPEAKER (-)

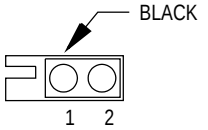

RADIO - C3
(EXCEPT BUILT-UP-EXPORT)

CAV	CIRCUIT	FUNCTION
1	D1 20VT/BR	CCD BUS(+)
2	D2 20WT/BK	CCD BUS(-)

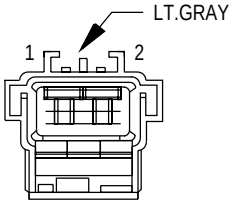

RADIO CHOKE

CAV	CIRCUIT	FUNCTION
1	X1 16DG/RD	NAME BRAND SPEAKER RELAY OUTPUT
2	X13 16RD/DG	RADIO CHOKE OUTPUT

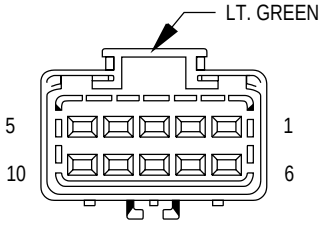

REAR A/C-HEATER UNIT

CAV	CIRCUIT	FUNCTION
1	C34 20DB/WT	A/C MODE DOOR DRIVER (A)
2	C61 20DB	DUAL ZONE A/C ACTUATOR
3	C40 12BR/WT	REAR BLOWER RELAY OUTPUT
4	C65 14BK/OR	REAR BLOWER MEDIUM SPEED
5	C60 16BK/LB	REAR BLOWER MEDIUM SPEED
6	C70 12DG	REAR BLOWER HIGH SPEED
7	-	-
8	-	-
9	-	-
10	-	-

* PREMIUM

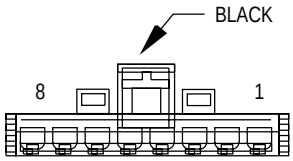

REAR BLOWER FRONT CONTROL SWITCH

CAV	CIRCUIT	FUNCTION
1	C70 12DG	REAR BLOWER HIGH SPEED
2	-	-
3	C60 16BK/LB	REAR BLOWER MEDIUM SPEED
4	-	-
5	C50 12BK/LG	REAR BLOWER LOW SPEED
6	-	-
7	Z1 12BK	GROUND
8	E2 20OR	PANEL LAMPS FEED

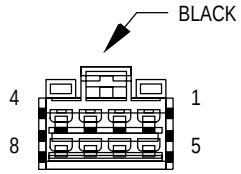

REAR BLOWER REAR CONTROL SWITCH

CAV	CIRCUIT	FUNCTION
1	C60 16BK/LB	REAR BLOWER MEDIUM SPEED
2	C65 14BK/OR	REAR BLOWER MEDIUM SPEED
3	C70 12DG	REAR BLOWER HIGH SPEED
4	Z1 18BK	GROUND
5	C50 12BK/LG	REAR BLOWER LOW SPEED
6	-	-
7	-	-
8	E2 20OR	PANEL LAMPS FEED

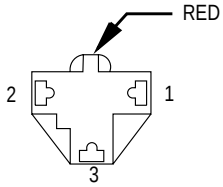

REAR CIGAR LIGHTER/POWER OUTLET

CAV	CIRCUIT	FUNCTION
1	F30 16RD	FUSED B(+)
2	-	-
3	Z1 16BK	GROUND

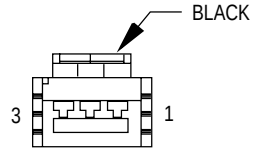

REAR DOME LAMP

CAV	CIRCUIT	
1	-	-
2	M113 20LB/PK	READING LAMP FEED
3	M20 20BR	COURTESY LAMP GROUND

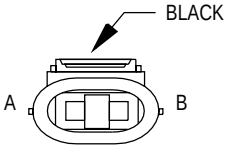

REAR WASHER MOTOR

CAV	CIRCUIT	FUNCTION
A	F1 20DB	FUSED IGNITION (RUN-ACC)
B	V20 20BK/WT	REAR WASHER MOTOR CONTROL

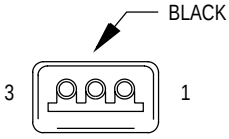

REAR WIPER MOTOR

CAV	CIRCUIT	FUNCTION
1	Z1 18BK	GROUND
2	V23 18BR/PK	FUSED IGNITION SWITCH OUTPUT
3	V13 18BR/LG	REAR WIPER MOTOR CONTROL

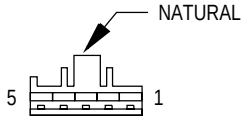

RECIRCULATION DOOR ACTUATOR

CAV	CIRCUIT	FUNCTION
1	C34 20DB/WT	COMMON DOOR DRIVER
2	-	-
3	-	-
4	-	-
5	C32 20GY/DB	RECIRCULATION DOOR DRIVER

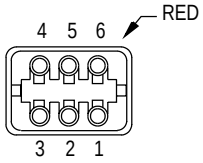

REMOTE KEYLESS ENTRY MODULE

CAV	CIRCUIT	FUNCTION
1	-	-
2	-	-
3	M1 20PK	FUSED B(+)
4	Z2 20BK/LG	GROUND
5	D9 22GY/BK	RKE MODULE PROGRAM ENABLE
6	G96 20LG/RD	RKE INTERFACE

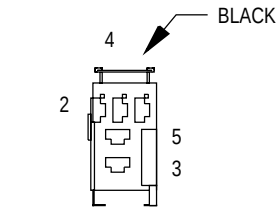

RIGHT COMBINATION RELAY (TRAILER TOW)

CAV	CIRCUIT	FUNCTION
1	L62 18BR/RD	RIGHT TURN SIGNAL
	L62 18BR/RD	
2	Z1 18BK	GROUND
3	L50 18WT/TN	STOP LAMP SWITCH OUTPUT
4	L605 18DG	RIGHT TURN SIGNAL
5	-	-

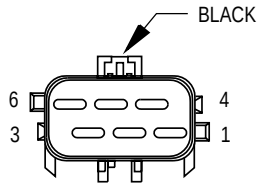

RIGHT DOOR SPEAKER (PREMIUM)

CAV	CIRCUIT	FUNCTION
1	X153 20WT/BR ●	RIGHT I/P SPEAKER (+)
	X154 20WT/VT ●●	RIGHT I/P SPEAKER (+)
2	X15 16BK/DG	AMPLIFIED SPEAKER GROUND
3	X54 20VT	RIGHT FRONT SPEAKER (+)
4	X155 20BR/WT ●	RIGHT FRONT I/P SPEAKER (-)
	X156 20VT/WT ●●	RIGHT FRONT I/P SPEAKER (-)
5	X13 16RD/DG	RADIO CHOKE OUTPUT
6	X56 20DB/RD	RIGHT FRONT SPEAKER (-)

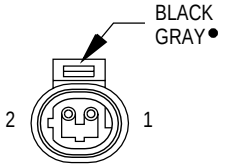

RIGHT FOG LAMP (BUILT-UP-EXPORT)

CAV	CIRCUIT	FUNCTION
1	F39 18PK/LG	FUSED PARK LAMP RELAY OUTPUT
2	Z39 20BK	FOG LAMP SWITCHED GROUND

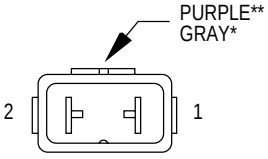

RIGHT FOG LAMP (EXCEPT BUILT-UP-EXPORT)

CAV	CIRCUIT	FUNCTION
1	L39 18VT/RD*	FOG LAMP RELAY OUTPUT
	L39 18LB**	FOG LAMP RELAY OUTPUT
2	Z39 20BK	FOG LAMP SWITCHED GROUND

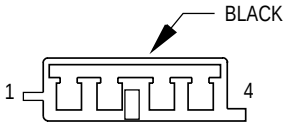

RIGHT FRONT PANEL SPEAKER (PREMIUM)

CAV	CIRCUIT	FUNCTION
1	X155 20BR/WT ●	RIGHT FRONT I/P SPEAKER (-)
	X156 20VT/WT ●●	RIGHT FRONT I/P SPEAKER (-)
2	-	-
3	-	-
4	X153 20WT/BR ●	RIGHT FRONT I/P SPEAKER (+)
	X154 20WT/VT ●●	RIGHT FRONT I/P SPEAKER (+)

* DODGE/PLYMOUTH
** CHRYSLER
● RHD
●● LHD
▲ DIESEL

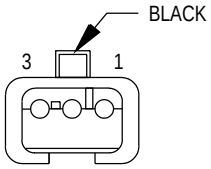

RIGHT FRONT PARK/ TURN SIGNAL LAMP (BUILT-UP-EXPORT)

CAV	CIRCUIT	FUNCTION
1	L78 20DG/YL	FUSED B(+)
2	Z1 18BK	GROUND
3	L60 18TN	RIGHT TURN SIGNAL

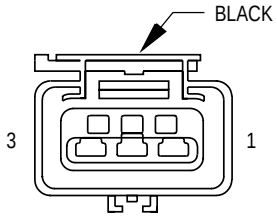

RIGHT FRONT PARK/TURN SIGNAL LAMP (EXCEPT BUILT-UP-EXPORT)

CAV	CIRCUIT	FUNCTION
1	L60 18TN	RIGHT TURN SIGNAL
2	L78 20DG/YL	FUSED B(+)
3	Z1 20BK	GROUND

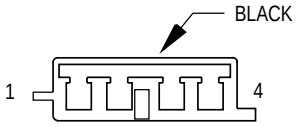

RIGHT FRONT SPEAKER (BASE)

CAV	CIRCUIT	FUNCTION
1	-	-
2	X56 20DB/RD	RIGHT FRONT SPEAKER (-)
3	X54 20VT	RIGHT FRONT SPEAKER (+)
4	-	-

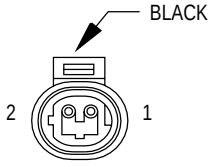

RIGHT FRONT WHEEL SPEED SENSOR

CAV	CIRCUIT	FUNCTION
1	B6 18WT/DB	RIGHT FRONT WHEEL SPEED SENSOR (-)
2	B7 18WT	RIGHT FRONT WHEEL SPEED SENSOR (+)

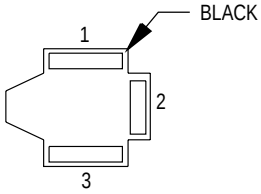

RIGHT HEADLAMP (BUILT-UP-EXPORT)

CAV	CIRCUIT	FUNCTION
1	L34 20RD/OR	FUSED RIGHT HIGH BEAM RELAY OUTPUT
2	L44 20VT/RD	FUSED RIGHT LOW BEAM OUTPUT
3	Z1 20BK	GROUND

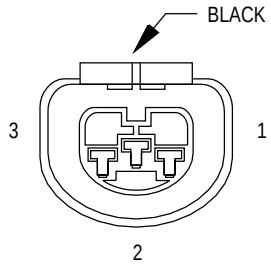

RIGHT HEADLAMP (EXCEPT BUILT-UP-EXPORT)

CAV	CIRCUIT	FUNCTION
1	L44 20VT/RD	FUSED RIGHT LOW BEAM OUTPUT
2	Z1 20BK	GROUND
3	L34 20RD/OR	FUSED RIGHT HIGH BEAM OUTPUT

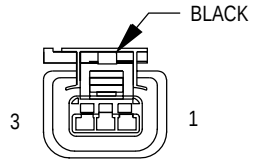

RIGHT HEADLAMP LEVELING MOTOR (BUILT-UP-EXPORT)

CAV	CIRCUIT	FUNCTION
1	Z1 20BK	GROUND
2	L13 18BR/YL	HEADLAMP ADJUST SIGNAL
3	L44 20VT/RD	FUSED RIGHT LOW BEAM OUTPUT

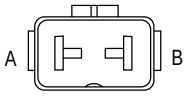

RIGHT HIGH HEADLAMP (CHRYSLER) (EXCEPT BUILT-UP-EXPORT)

CAV	CIRCUIT	FUNCTION
A	L34 20RD/OR	FUSED RIGHT HIGH BEAM OUTPUT
B	Z1 20BK	GROUND

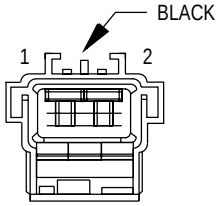

RIGHT LIFTGATE FLOOD LAMP

CAV	CIRCUIT	FUNCTION
1	M11 20PK/LB	COURTESY LAMP RELAY OUTPUT
2	Z1 20BK	GROUND

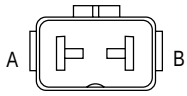

RIGHT LOW HEADLAMP (CHRYSLER) (EXCEPT BUILT-UP-EXPORT)

CAV	CIRCUIT	FUNCTION
A	L44 20VT/RD	FUSED RIGHT LOW BEAM OUTPUT
B	Z1 20BK	GROUND

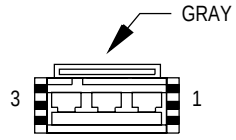

RIGHT MID READING LAMP

CAV	CIRCUIT	FUNCTION
1	M113 20LB/PK	READING LAMP FEED
2	M20 20BR	COURTESY LAMP GROUND
3	F41 20PK/VT	FUSED B(+)

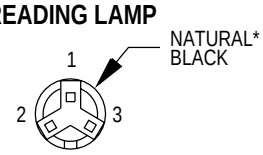

RIGHT REAR DOOR AJAR SWITCH

CAV	CIRCUIT	FUNCTION
1	Z1 18BK	GROUND
2	G76 18TN/YL	RIGHT REAR DOOR AJAR SWITCH SENSE
3	-	-

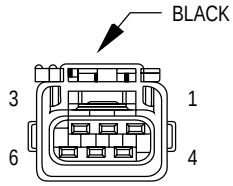

RIGHT REAR LAMP ASSEMBLY (BUILT-UP-EXPORT)

CAV	CIRCUIT	FUNCTION
1	Z1 20BK	GROUND
2	L36 20LG	REAR FOG LAMP
3	L78 20DG/YL	FUSED B(+)
4	L1 20VT/BK	BACK-UP LAMP FEED
5	L62 18BR/RD	RIGHT TURN SIGNAL
6	L50 18WT/TN	STOP LAMP SWITCH OUTPUT

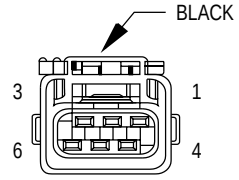

RIGHT REAR LAMP ASSEMBLY (EXCEPT BUILT-UP-EXPORT)

CAV	CIRCUIT	FUNCTION
1	L62 18BR/RD	RIGHT TURN SIGNAL
2	-	-
3	L1 20VT/BK	BACK-UP LAMP FEED
4	L78 20DG/YL	FUSED B(+)
5	L50 18WT/TN	STOP LAMP SWITCH OUTPUT
6	Z1 20BK	GROUND

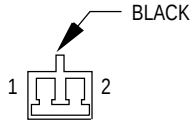

RIGHT REAR PILLAR SPEAKER (PREMIUM)

CAV	CIRCUIT	FUNCTION
1	X158 20DB/OR	RIGHT REAR PILLAR SPEAKER (+)
2	X152 20DB/WT	RIGHT REAR PILLAR SPEAKER (-)

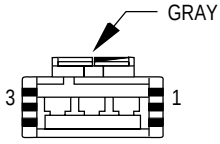

RIGHT REAR READING LAMP

CAV	CIRCUIT	FUNCTION
1	M113 20LB/PK	READING LAMP FEED
2	M20 20BR	COURTESY LAMP GROUND
3	F41 20PK/VT	FUSED B(+)

* DIESEL

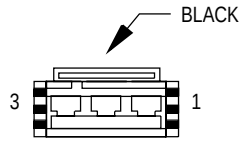

RIGHT REAR SLIDING DOOR CONTACTS

CAV	CIRCUIT	FUNCTION
1	F133 20BR/YL	LOCK RELAY OUTPUT
2	F136 20VT/YL	UNLOCK RELAY OUTPUT
3	-	-

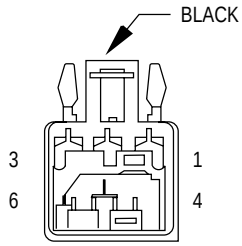

RIGHT REAR SPEAKER

CAV	CIRCUIT	FUNCTION
1	X152 20DB/WT*	RIGHT REAR SPEAKER (-)
2	X15 16BK/DG*	AMPLIFIED SPEAKER GROUND
3	X52 20DB/WT	RIGHT REAR SPEAKER (+)
4	X158 20DB/OR*	RIGHT REAR SPEAKER (+)
5	X13 16RD/DG*	RADIO CHOKE OUTPUT
6	X58 20DB/OR	RIGHT REAR SPEAKER (-)

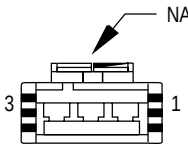

RIGHT REAR VENT MOTOR (LHD)

CAV	CIRCUIT	FUNCTION
1	Q24 18DG	RIGHT REAR VENT MOTOR (OPEN)
2	Q14 18GY	RIGHT REAR VENT MOTOR (CLOSE)
3	-	-

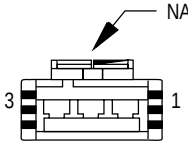

RIGHT REAR VENT MOTOR (RHD)

CAV	CIRCUIT	FUNCTION
1	Q23 18RD/WT	RIGHT REAR VENT MOTOR (OPEN)
2	Q13 18DB	RIGHT REAR VENT MOTOR (CLOSE)
3	-	-

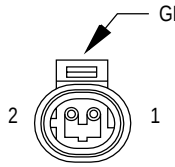

RIGHT REAR WHEEL SPEED SENSOR

CAV	CIRCUIT	FUNCTION
1	B1 18YL/DB	RIGHT REAR WHEEL SPEED SENSOR (-)
2	B2 18YL	RIGHT REAR WHEEL SPEED SENSOR (+)

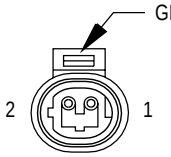

RIGHT REPEATER LAMP (BUILT-UP-EXPORT)

CAV	CIRCUIT	FUNCTION
1	L62 18BR/RD	RIGHT TURN SIGNAL
2	Z1 18BK	GROUND

* PREMIUM

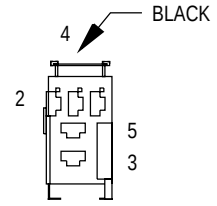

RIGHT STOP/TURN SIGNAL RELAY (TRAILER TOW)

CAV	CIRCUIT	FUNCTION
1	L50 18WT/TN	STOP LAMP SWITCH OUTPUT
	L50 18WT/TN	
2	Z1 18BK	GROUND
	Z1 18BK	
3	L74 18LG	STOP LAMP SWITCH OUTPUT
4	L62 18BR/RD	RIGHT TURN SIGNAL
5	L605 18DG	RIGHT COMBINATION RELAY OUTPUT

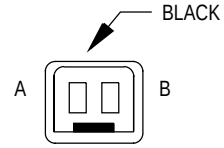

RIGHT VISOR/ VANITY MIRROR LAMPS

CAV	CIRCUIT	FUNCTION
A	M20 20BR	COURTESY LAMP GROUND
B	F41 20PK/VT	FUSED B(+)

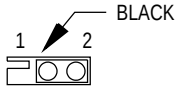

SEAT BELT SWITCH

CAV	CIRCUIT	FUNCTION
1	G10 18LG/RD	SEAT BELT SWITCH SENSE
2	Z1 20BK	GROUND

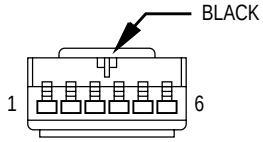

SENTRY KEY IMMOBILIZER MODULE (BUILT-UP-EXPORT)

CAV	CIRCUIT	FUNCTION
1	F41 20PK/VT	FUSED B(+)
2	Z2 20BK	GROUND
3	F87 20WT/BK	FUSED IGNITION (ST-RUN)
4	-	-
5	D2 20WT/BK	CCD BUS (-)
6	D1 20VT/BR	CCD BUS (+)

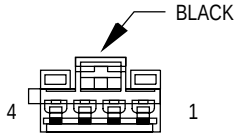

SPEED CONTROL DIMMING MODULE

CAV	CIRCUIT	FUNCTION
1	L97 29PK/DB	PARK LAMP RELAY CONTROL
2	-	-
3	V38 20LB/RD	SPEED CONTROL RELAY CONTROL
4	V32 20YL/RD	SPEED CONTROL ON/OFF SWITCH SENSE

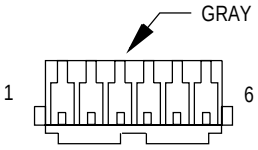

STOP LAMP SWITCH

CAV	CIRCUIT	FUNCTION
1	K29 20WT/PK	STOP LAMP SWITCH SENSE
2	Z1 20BK	GROUND
3	V32 20YL/RD*	SPEED CONTROL ON/OFF SWITCH SENSE
4	V30 20DB/RD*	SPEED CONTROL BRAKE SWITCH OUTPUT
5	L50 18WT/TN	STOP LAMP SWITCH OUTPUT
6	F32 18PK/DB	FUSED B(+)

* GAS

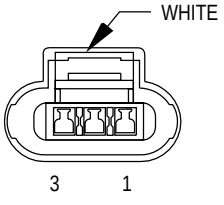

THROTTLE POSITION SENSOR (2.0L)

CAV	CIRCUIT	FUNCTION
1	K4 18BK/LB	CRANK POSITION SENSOR
2	K22 18OR/DB	THROTTLE POSITION SENSOR SIGNAL
3	K6 18VT/WT	5V SUPPLY

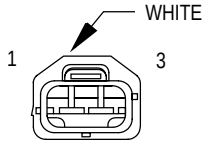

THROTTLE POSITION SENSOR (EXCEPT 2.0L)

CAV	CIRCUIT	FUNCTION
1	K4 18BK/LB	SENSOR GROUND
2	K22 18OR/DB	THROTTLE POSITION SENSOR SIGNAL
3	K6 18VT/WT	5 VOLT SUPPLY

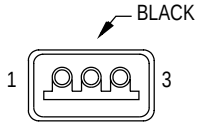

TRACTION CONTROL SWITCH

CAV	CIRCUIT	FUNCTION
1	Z1 20BK	GROUND
2	B27 20RD/YL	TRACTION CONTROL SWITCH SENSE
3	E2 20OR	PANEL LAMP FEED

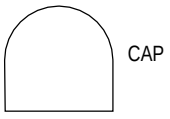

TRAILER TOW CONNECTOR

CAV	CIRCUIT	FUNCTION
1	L74 18LG	STOP LAMP SWITCH OUTPUT
2	L78 18BR	FUSED B(+)
3	Z1 18WT	GROUND
4	L73 18YL	STOP LAMP SWITCH OUTPUT

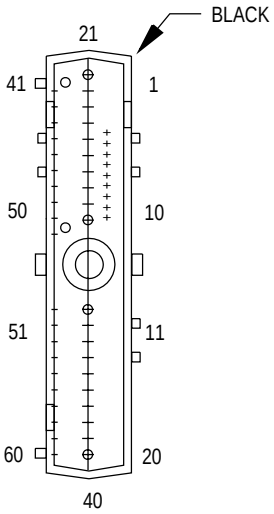

TRANSMISSION CONTROL MODULE

CAV	CIRCUIT	FUNCTION
1	T1 18LG/BK	TRANSMISSION RANGE SWITCH T1 SENSE
2	-	-
3	T3 18VT	TRANSMISSION RANGE SWITCH T3 SENSE
4	D2 18WT/BK	CCD BUS(-)
5	-	-
6	K24 18GY/BK	CRANKSHAFT POSITION SENSOR SIGNAL
7	D21 18PK	SCI TRANSMIT
8	F45 18YL/RD	FUSED IGNITION (ST)
9	T9 18OR/BK	OVERDRIVE PRESSURE SWITCH SENSE
10	T10 18YL/DG	TORQUE MANAGEMENT REQUEST SENSE
11	F11 18RD/WT	FUSED IGNITION (ST-RUN-OFF)
12	K22 18OR/DB	THROTTLE POSITION SENSOR SIGNAL
13	T13 18DB/BK	SPEED SENSOR GROUND
14	T14 18LG/WT	OUTPUT SHAFT SPEED SENSOR SIGNAL
15	T15 18LG	12 VOLT SUPPLY
16	T16 18RD	TRANSMISSION CONTROL RELAY OUTPUT
17	T16 18RD	TRANSMISSION CONTROL RELAY OUTPUT
18	-	-
19	T19 18WT	2-4 SOLENOID CONTROL
20	T20 18LB	LOW/REVERSE SOLENOID CONTROL
21	-	-
22	-	-
23	-	-
24	-	-
25	-	-
26	-	-
27	-	-
28	-	-
29	-	-
30	-	-
31	-	-
32	-	-
33	-	-
34	-	-
35	-	-
36	-	-
37	-	-
38	-	-
39	-	-
40	-	-

(CONTINUED ON NEXT PAGE)

(CONTINUED)

CAV	CIRCUIT	FUNCTION
41	T41 18BK/WT	TRANSMISSION RANGE SWITCH T41 SENSE
42	T42 18VT/WT	TRANSMISSION RANGE SWITCH T42 SENSE
43	D1 18VT/BR	CCD BUS(+)
44	-	-
45	-	-
46	D6 18PK/LB	SCI RECEIVE
47	T47 18YL/BK	2/4 PRESSURE SWITCH SENSE
48	-	-
49	-	-
50	T50 18DG	LOW/REVERSE PRESSURE SWITCH SENSE
51	K4 18BK/LB	SENSOR GROUND
52	T52 18RD/BK	INPUT SPEED SENSOR SIGNAL
53	Z14 16BK/YL	EATX GROUND
54	T54 18VT/LG	TRANSMISSION TEMPERATURE SENSOR SIGNAL
55	-	-
56	A5 18RD/DB	FUSED B(+)
57	Z13 16BK/RD	EATX GROUND
58	G7 18WT/OR	VEHICLE SPEED SENSOR SIGNAL
59	T59 18PK	UNDERDRIVE SOLENOID CONTROL
60	T60 18BR	OVERDRIVE SOLENOID CONTROL

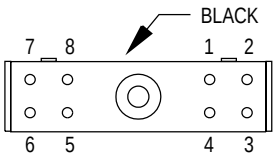

TRANSMISSION CONTROL SOLENOIDS

CAV	CIRCUIT	FUNCTION
1	T47 18YL/BK	2/4 PRESSURE SWITCH SENSE
2	T50 18DG	LOW/REVERSE PRESSURE SWITCH SENSE
3	T9 18OR/BK	OVERDRIVE PRESSURE SWITCH SENSE
4	T16 18RD	TRANSMISSION CONTROL RELAY OUTPUT
5	T59 18PK	UNDERDRIVE PRESSURE SWITCH SENSE
6	T60 18BR	OVERDRIVE SOLENOID CONTROL
7	T20 18LB	LOW/REVERSE SOLENOID CONTROL
8	T19 18WT	2/4 SOLENOID CONTROL

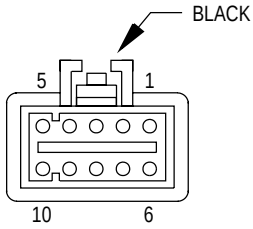

TRANSMISSION RANGE SENSOR

CAV	CIRCUIT	FUNCTION
1	F20 18WT	FUSED IGNITION SWITCH OUTPUT
2	-	-
3	T13 18DB/BK	SPEED SENSOR GROUND
4	T54 18VT/LG	TRANSMISSION TEMPERATURE SENSOR SIGNAL
5	T41 18BK/WT	TRANSMISSION RANGE SENSOR T41 SENSE
6	L1 18VT/BK	BACK-UP LAMP FEED
7	T1 18LG/BK	TRANSMISSION RANGE SENSOR T1 SENSE
8	T3 18VT	TRANSMISSION RANGE SENSOR T3 SENSE
9	T42 18VT/WT	TRANSMISSION RANGE SENSOR T42 SENSE
10	T41 18BR/YL	TRANSMISSION RANGE SENSOR T41 SENSE

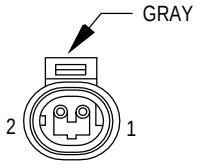

TURBINE SPEED SENSOR

CAV	CIRCUIT	FUNCTION
1	T13 18DB/BK	SPEED SENSOR GROUND
2	T52 18RD/BK	INPUT SPEED SENSOR SIGNAL

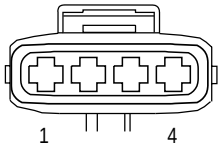

TURBO BOOST PRESSURE SENSOR (DIESEL)

CAV	CIRCUIT	FUNCTION
1	K4 18BK/LB	SENSOR GROUND
2	K21 18BK/RD	INTAKE AIR TEMPERATURE SIGNAL
3	K9 18LB	5 VOLT SUPPLY
4	K1 18DG/RD	BOOST PRESSURE SIGNAL

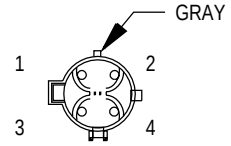

UPSTREAM HEATED OXYGEN SENSOR

CAV	CIRCUIT	FUNCTION
1	Z1 18BK	GROUND
2	A142 18DG/OR	ASD RELAY OUTPUT
3	K4 18BK/LB	SENSOR GROUND
4	K41 18BK/DG	UPSTREAM HEATED OXYGEN SENSOR SIGNAL

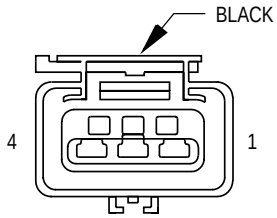

VEHICLE SPEED CONTROL SERVO

CAV	CIRCUIT	FUNCTION
1	V36 18TN/RD	SPEED CONTROL VACUM SOLENOID CONTROL
2	V35 18LG/RD	SPEED CONTROL VENT SOLENOID CONTROL
3	V30 18DB/RD	STOP LAMP SWITCH OUTPUT
4	Z1 18BK	GROUND

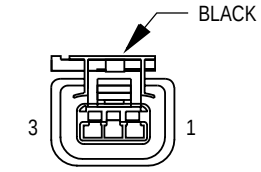

VEHICLE SPEED SENSOR (EXCEPT 3.3L/3.8L)

CAV	CIRCUIT	FUNCTION
1	K7 18OR	8 VOLT SUPPLY
1	F87 18WT/BK*	FUSED IGNITION (ST-RUN)
2	K4 18BK/LB	SENSOR GROUND
2	K4 20BK/LB*	SENSOR GROUND
3	G7 18WT/OR	VEHICLE SPEED SENSOR SIGNAL

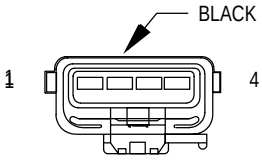

WIPER MODULE (BUILT-UP-EXPORT)

CAV	CIRCUIT	FUNCTION
1	V3 12BR/WT	WIPER HIGH/LOW RELAY LOW SPEED OUTPUT
2	V7 20DG/WT	WIPER PARK SWITCH SENSE
3	V4 12RD/YL	WIPER HIGH/LOW RELAY HIGH SPEED OUTPUT
4	Z1 14BK	GROUND

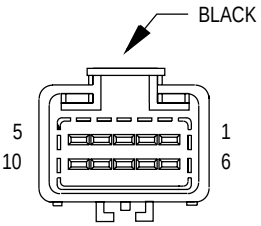

WIPER MODULE (EXCEPT BUILT-UP-EXPORT)

CAV	CIRCUIT	FUNCTION
1	V3 12BR/WT	WIPER HIGH/LOW RELAY LOW SPEED OUTPUT
2	V7 20DG/WT	WIPER PARK SWITCH SENSE
3	V4 12RD/YL	WIPER HIGH/LOW RELAY HIGH SPEED OUTPUT
4	Z1 14BK	GROUND
5	-	-
6	-	-
7	-	-
8	-	-
9	-	-
10	-	-

* DIESEL

8W-90 CONNECTOR/GROUND LOCATIONS

INDEX

page

DESCRIPTION AND OPERATION
CONNECTOR/GROUND LOCATIONS 1

page

CONNECTOR/GROUND LOCATIONS 31
INTRODUCTION 1

DESCRIPTION AND OPERATION

INTRODUCTION

This section provides illustrations identifying the general location of components, grounds, and connectors in the vehicle. A index is provided. Use the wiring diagrams in each section for connector/ground number identification. Refer to the index for the proper figure number.

CONNECTOR/GROUND LOCATIONS

For items not shown in this section a N/S is placed in the Fig. column.

Component/ Ground	Color	Location	Fig.
A/C Compressor Clutch	BK	Top of A/C Compressor	5, 6, 7, 8, 9
A/C-Heater Control Module C1	NAT	Rear of Control	11
A/C-Heater Control Module C2	BK	Rear of Control	11
A/C Pressure Transducer	GY	RT Side Cowl	3
A/C Zone Door Actuator	NAT	LT Side of HVAC	15
Airbag Control Module C1	YL	Rear of I.P. Center Stack	12
Airbag Contol Module C2	BK	Rear of I.P. Center Stack	12
All Wheel Drive Solenoid	BK	Near Fuel Tank	20
Ambient Temperature Sensor	BK	On Radiator Closure Panel	4
Ash Receiver Lamp	RD	At Lamp	10
Automatic Day/Night Mirror	BK	At Mirror	15
B01	BK	LT Kick Panel	18
B02	BK	LT Kick Panel	18
B03	BK	RT Kick Panel	18

Component/ Ground	Color	Location	Fig.
B09	BK	Under Seat	16
B17	BK	LT Quarter Panel	21
B23	BK	RT of Steering Column	13
B33	BK	LT Frame Rail	2
B56	RD	Under Seat	16
B70	LT/GY	LT Frame Rail	2
B75	BL	Bottom of RT B-Pillar	12
B98	BK	Rear of RT Tail	N/S
B99	BK	Rear of LT Tail Lamp	N/S
B120	BK	LT Kick Panel	N/S
Backup Lamp Switch (M/T)	BK	On Transmission	5, 6, 8
Blend Door Actuator	NAT	LT Side of HVAC	15
Body Control Module C1	NAT	On Junction Block	12, 13
Brake Pressure Switch	BK	On Master Cylinder	2
C19		Above RT Vanity Mirror	17
Camshaft Position Sensor 2.4L	BK	Rear of Cylinder Head	6, 7

DESCRIPTION AND OPERATION (Continued)

Component/ Ground	Color	Location	Fig.
Camshaft Position Sensor 3.3L, 3.8L	BK	RT Side of Engine	9
Center Dome Lamp	BK	At Lamp	N/S
CHMSL	RD	Rear of CHMSL	21
Cigar Lighter	BK	Rear of Lighter	9
Clockspring C1	YL	Rear of Clockspring	11
Clockspring C2	NAT	Rear of Clockspring	11
Clutch Interlock Switch	BK	Top of Clutch Pedal	13
Controller Anti-Lock Brake	BK	RT Side of Engine Compartment	N/S
Crankcase Vent Heater		At Heater	N/S
Crankshaft Position Sensor	BK	Rear of Engine	5, 6, 7, 9
D01	BK	On Kick Panel	18
D02	BK	On Kick Panel	18
Data Link Connector	BK	LT of Steering Column	12
Downstream Heated Oxygen Sensor	BK	Front Center of Floor Pan	16
Driver Airbag	YL	Rear of Airbag	11
E36	BK	LT Frame Rail	2
E40	BK	At Radiator Fan Module	N/S
E43	LT/GY	LT Frame Rail	2
E69	BK	LT Side of Intake	6, 7
E78	BK	Near Throttle Body	9
EC1		Above RT Vanity Mirror	17
EGR Solenoid	BK	LT Rear of Engine	6, 9
Electric Wiper De-Icer C1	BK	At Left Base of Windshield	11
Electric Wiper De-Icer C2	BK	At Right Base of Windshield	11

Component/ Ground	Color	Location	Fig.
Engine Coolant Temp Sensor 2.4L	BK	On Cylinder Block	N/S
Engine Coolant Temp Sensor 2.5	BK	On Cylinder Head	8
Engine Coolant Temp Sensor 3.3L, 3.8L	BK	On Cylinder Block	N/S
Engine Oil Pressure Switch	GN	On Cylinder Block	5, 6, 7, 8, 9
Engine Starter Motor		Rear of Starter	5, 6, 7, 8, 9
EVAP/Purge Solenoid	BK	RT Motor Mount	3
Evaporator Temperature Sensor	BK	RT Side of HVAC	N/S
F02	BK	Near Throttle Body	9
F09	BK	LT Side of Intake	6, 7
Front Blower Motor	BK	At Motor	10
Front Blower Motor Resistor Block	BK	RT Side Cowl	4
Front Cigar Lighter	BK	Rear of Lighter	9
Front Reading Lamps/Switch	RD	At Lamp	15
Front Washer Motor	BK	Bottom of Reservior	4
Fuel Injection Pump	BK	Near Pump	8
Fuel Injector #1	BK	At Injector	N/S
Fuel Injector #2	BK	At Injector	N/S
Fuel Injector #3	BK	At Injector	N/S
Fuel Injector #4	BK	At Injector	N/S
Fuel Injector #5	BK	At injector	N/S
Fuel Injector #6	BK	At Injector	N/S
Fuel Injectors (2.0L)	BK	At Injectors	5
Fuel Pump Heater	BK	At Heater	N/S
Fuel Pump Module	LT/GY	Side of Fuel Tank	20

DESCRIPTION AND OPERATION (Continued)

Component/ Ground	Color	Location	Fig.
G100		LT Frame Rail	3
G101 2.4L		Rear of Cylinder Head	6, 7
G101 3.3L, 3.8L		Rear of Cylinder Block	9
G102		LT Frame Rail	3
G103 2.4L		Rear of Cylinder Head	6, 7
G103 3.3L, 3.8L		Rear of Cylinder Block	9
G104		Rear of Right Headlamp	4
G200		Right of I.P. Center Stack	10
G201		I.P. Center Support	10
G202		I.P. Center Support	10
G204		I.P. Center Support	10
G300		LT Kick Panel	13
G301		RT Kick Panel	14
G302		LT Quarter Panel	21
G400		In Liftgate	23
Generator	BK	Rear of Generator	5, 6, 7, 8, 9
Glove Box Lamp	BL	Rear of Glove Box	11
Glow #1	BK	At Glow Plug	8
Glow #2	BK	At Glow Plug	8
Glow #3	BK	At Glow Plug	8
Glow #4	BK	At Glow Plug	8
Headlamp Dimmer Switch	BK	Part of Multifunction Switch	11
Headlamp Switch C1	NAT	Rear of Switch	11
Headlamp Switch C2	BK	Rear of Switch	11
Headlamp Washer Pump	BK	At Pump	N/S
High Note Horn	BK	LT Frame Rail	4
Hood Ajar Switch	NAT	LT Fender	2

Component/ Ground	Color	Location	Fig.
Horn Switch		Rear of Driver Airbag	11
Idle Air Control Motor	BK	On Throttle Body	5, 6, 7, 8, 9
Ignition Coil Pack 2.0L	BK	Top of Valve Cover	5
Ignition Coil Pack 2.4L	BK	Top of Valve Cover	6, 7
Ignition Coil Pack 3.3L, 3.8L	BK	RT Side of Engine	9
Ignition Switch C1	GY	Rear of Switch	11
Ignition Switch C2	GN	Rear of Switch	11
Ignition Switch C3	BK	Rear of Switch	11
Instrument Cluster	RD	Rear of Cluster	11
Intake Air Temp Sensor	GY	On Intake	6, 7
J01D	BK	RT Side of HVAC	15
J02A	BK	Top of Liftgate	23
JO3A	BK	Top of Liftgate	23
Junction Block C1	GY	On Junction Block	13
Junction Block C2	GY	On Junction Block	13
Junction Block C3	GY	On Junction Block	12
Junction Block C4	GY	On Junction Block	12
Key-In Halo Lamp	WT	Rear of Lamp	11
Knock Sensor 2.0L	GY	Front of Cylinder Block	5
Knock Sensor 2.4L	GY	Front of Cylinder Block	6, 7
Knock Sensor 3.3L, 3.8L	GY	Front of Cylinder Block	N/S
L15	BK	Top of Liftgate	23
L16	BK	Top of Liftgate	23
Left Flasher Relay	BK	LT Rear Quarter Panel	N/S
Left Door Ajar Switch	BK	LT B-PIllar	14

DESCRIPTION AND OPERATION (Continued)

Component/ Ground	Color	Location	Fig.
Left Door Arm/Disarm Switch	BK	At Switch	19
Left Door Courtesy Lamp	BK	At Lamp	19
Left Door Speaker	BK	At Speaker	19
Left Front Fog Lamp	BK	At Lamp	4
Left Front Door Lock Motor	BK	At Motor	19
Left Front Panel Speaker	BK	At Speaker	11
Left Front Park/Turn Signal Lamp	BK	At Lamp	4
Left Front Wheel Speed Sensor	BK	LT Fender Side Shield	2
Left Front Window Motor	RD	At Motor	19
Left Headlamp	BK	At Lamp	2
Left Headlamp Leveling Motor	BK	At Motor	N/S
Left Liftgate Flood Lamp	BK	At Lamp	21
Left Mid Reading Lamp	GY	At Lamp	15
Left Power Door Lock Switch	BK	At Switch	19
Left Power Mirror C1	RD	At Mirror	11
Left Power Mirror C2	BL	At Mirror	11
Left Power Window Switch	BK	At Switch	19
Left Rear Door Ajar Switch	BK	LT C-Pillar	21
Left Rear Lamp Assembly	BK	At Lamp	21
Left Rear Pillar Speaker	BK	At Speaker	21
Left Rear Reading Lamp	BK	At Lamp	15
Left Rear Sliding Door Contacts	BK	LT B-Pillar	14
Left Rear Sliding Door Lock Motor	BK	At Motor	N/S
Left Rear Speaker	BK	At Speaker	21
Left Rear Vent Motor	NAT	At Motor	21
Left Rear Wheel Speed Sensor	BK	Center Rear of Floor Pan	16
Left Repeater Lamp	GY	At Lamp	N/S
Left Speed Control Switch		Left Side of Steering Wheel Pad	11
Left Stop/Turn Signal Relay	BK	LT Quarter Panel	N/S
Left Visor/Vanity Lamp	BK	At Lamp	15
License Lamp	GY	At Lamps	21
Liftgate Ajar Switch	BK	At Latch	21
Liftgate Arm/Disarm Switch	BK	At Key Cylinder	21
Liftgate Door Lock Motor	BK	At Motor	21
LJ01	BK	LT Quarter Panel	21
Low Coolant Switch	BK	At Reservior	8
Low Note Horn	BK	LT Frame Rail	4
Low Washer Fluid Level Switch	BK	Bottom of Reservior	N/S
MAP Sensor 2.0L	BK	On Intake	5
MAP Sensor 2.4L	BK	On Intake	N/S
MAP Sensor 3.3L, 3.8L	BK	Near Throttle Body	9
Memory Seat/Mirror Module	BK	Under Seat	16
Memory Set Switch	BL	At Switch	19

DESCRIPTION AND OPERATION (Continued)

Component/ Ground	Color	Location	Fig.
Message Center	BL	Rear of Message Center	11
Mode Door Actuator	BK	LT Side of HVAC	15
Multi Function Switch	BK	Rear of Switch	11
Name Brand Speaker Relay	LT/GY	LT of Steering Column	11
Needle Movement Sensor	BK	Back of Generator	8
Output Shaft Speed Sensor	GY	Front of Transmission	7, 9
Overhead Console	RD	Front of Console	15
P18	GY	RT of Steering Column	12
P25	BK	RT of I.P Center Stack	10
P30	BK	RT Side of HVAC	10
P34	GY	RT of Steering Column	12
P50	NAT	Right Side of HVAC Unit Taped to Harness	10
Park Brake Switch	BK	Top of Park Brake	13
Park/Neutral Positon Switch	BK	Front of Transmission	N/S
Passenger Airbag	YL	Rear of Airbag	11
PDC C1	NAT	Bottom of PDC	2
PDC C2	OR	Bottom of PDC	2
PDC C3	DK/ GN	Bottom of PDC	2
PDC C4	BK	Bottom of PDC	2
PDC C5	LT/GY	Bottom of PDC	2
PDC C6	LT/GN	Bottom of PDC	3
PDC C7	LT/GY	Bottom of PDC	3
PDC C8	BL	Bottom of PDC	3
Power Folding Mirror Switch	BK	At Switch	N/S

Component/ Ground	Color	Location	Fig.
Power Mirror Switch	BK	Rear of Switch	11
Power Steering Pressure Switch	BK	RT Side of Engine Compartment	N/S
Powertrain Control Module C1	BK	LT Fender Side Shield	3
Powertrain Control Module C2	BK	LT Fender Side Shield	3
Radiator Fan No.1	BK	At Motor	N/S
Radiator Fan No.2	BK	At Motor	N/S
Radiator Fan Solid State Relay	BK	LT Front Frame Rail	3
Radio C1	GY	Rear of Radio	11
Radio C2	BK	Rear of Radio	11
Radio C3	BK	Rear of Radio	11
Radio Choke	LT/GY	Rear of Radio	N/S
Rear A/C-Heater Unit	LT/GN	RT Quarter Panel	22
Rear Blower Front Control Switch	BK	Rear of Switch	11
Rear Blower Rear Control Switch	BK	At Switch	N/S
Rear Cigar Lighter/Power Outlet	BK	LT Quarter Panel	21
Rear Dome Lamp	BK	At Lamp	N/S
Rear Washer Motor	BK	Bottom of Reservior	4
Rear Window Defogger	BK	On Liftgate	21
Rear Wiper Motor	BK	At Motor	21
Recirculation Door Actuator	NAT	RT Side of HVAC	15
Remote Keyless Entry Module	RD	Top Left of I.P.	11
RF3	BK	At Radiator Fan	N/S

DESCRIPTION AND OPERATION (Continued)

Component/ Ground	Color	Location	Fig.
Right Door Arm/Disarm Switch	BK	At Switch	17
Right Door Courtesy Lamp	BK	At Lamp	17
Right Door Speaker	BK	At Speaker	17
Right Flasher Relay	BK	LT Quarter Panel	N/S
Right Front Fog Lamp	BK	At Lamp	4
Right Front Door Ajar Switch	BK	RT B-Pillar	12
Right Front Door Lock Motor	BK	At Motor	17
Right Front Panel Speaker	BK	At Speaker	11
Right Front Park/Turn Signal Lamp	BK	At Lamp	4
Right Front Wheel Speed Sensor	BK	Right Fender Side Shield	4
Right Front Window Motor	RD	At Motor	19
Right Headlamp	BK	At Lamp	4
Right Headlamp Leveling Motor	BK	At Motor	N/S
Right Liftgate Flood Lamp	BK	At Lamp	23
Right Mid Reading Lamp	GY	At Lamp	17
Right Power Door Lock Switch	BK	At Switch	19
Right Power Mirror C1	RD	At Mirror	11
Right Power Mirror C2	BL	At Mirror	11
Right Power Window Switch	BK	At Switch	19
Right Rear Lamp Assembly	BK	At Lamp	22
Right Rear Door Ajar Switch	BK	RT C-Pillar	22
Right Rear Pillar Speaker	BK	At Speaker	22
Right Rear Reading Lamp	GY	At Lamp	17
Right Rear Sliding Door Contact	BK	RT B-Pillar	14
Right Rear Sliding Door Lock Motor	BK	At Motor	N/S
Right Rear Speaker	BK	At Speaker	22
Right Rear Vent Motor	NAT	At Motor	22
Right Rear Wheel Speed Sensor	BK	Center Rear of Floor Pan	16
Right Repeater Lamp	GY	At Lamp	N/S
Right Speed Control Switch		Right Side of Steering Wheel Pad	11
Right Stop/Turn Signal Relay	BK	LT Quarter Panel	N/S
Right Visor/ Vanity Lamp	BK	At Lamp	17
S02	BK	Under Seat	N/S
Seat Belt Switch	BK	LT B-Pillar	N/S
Sentry Key Immobilizer Module	BK	Near Steering at Module	11
Stop Lamp Switch	GY	Top of Brake Pedal	13
T05	BK	LT Quarter Panel	N/S
T08	BK	LT Quarter Panel	N/S
Throttle Position Sensor	NAT	On Throttle Body	5, 6, 7, 8, 9
Trailer Tow Connector	BK	LT Quarter Panel	N/S
Transmission Control Module	BK	RT Fender Side Shield	3
Transmission Range Sensor	BK	Top of Transmission	7, 9

DESCRIPTION AND OPERATION (Continued)

Component/ Ground	Color	Location	Fig.
Transmission Control Solenoids	BK	Front of Transmission	7, 9
Turbine Speed Sensor	GY	Front of Transmission	7, 9
Turn Signal/ Hazard Switch	BK	Part of Multifunction Switch	11
Upstream Heated Oxygen Sensor	GY	Rear of Engine	5, 6, 7, 8, 9

Component/ Ground	Color	Location	Fig.
Vehicle Speed Control Servo	BK	LT Rear of Engine Compartment	5, 6, 7, 8, 9
Vehicle Speed Sensor	BK	Rear of Transmission	5, 6, 8
Windshield Wiper Switch	BK	Part of Multifunction Switch	11
Wiper Module	BK	LT Side of Engine	2

DESCRIPTION AND OPERATION (Continued)

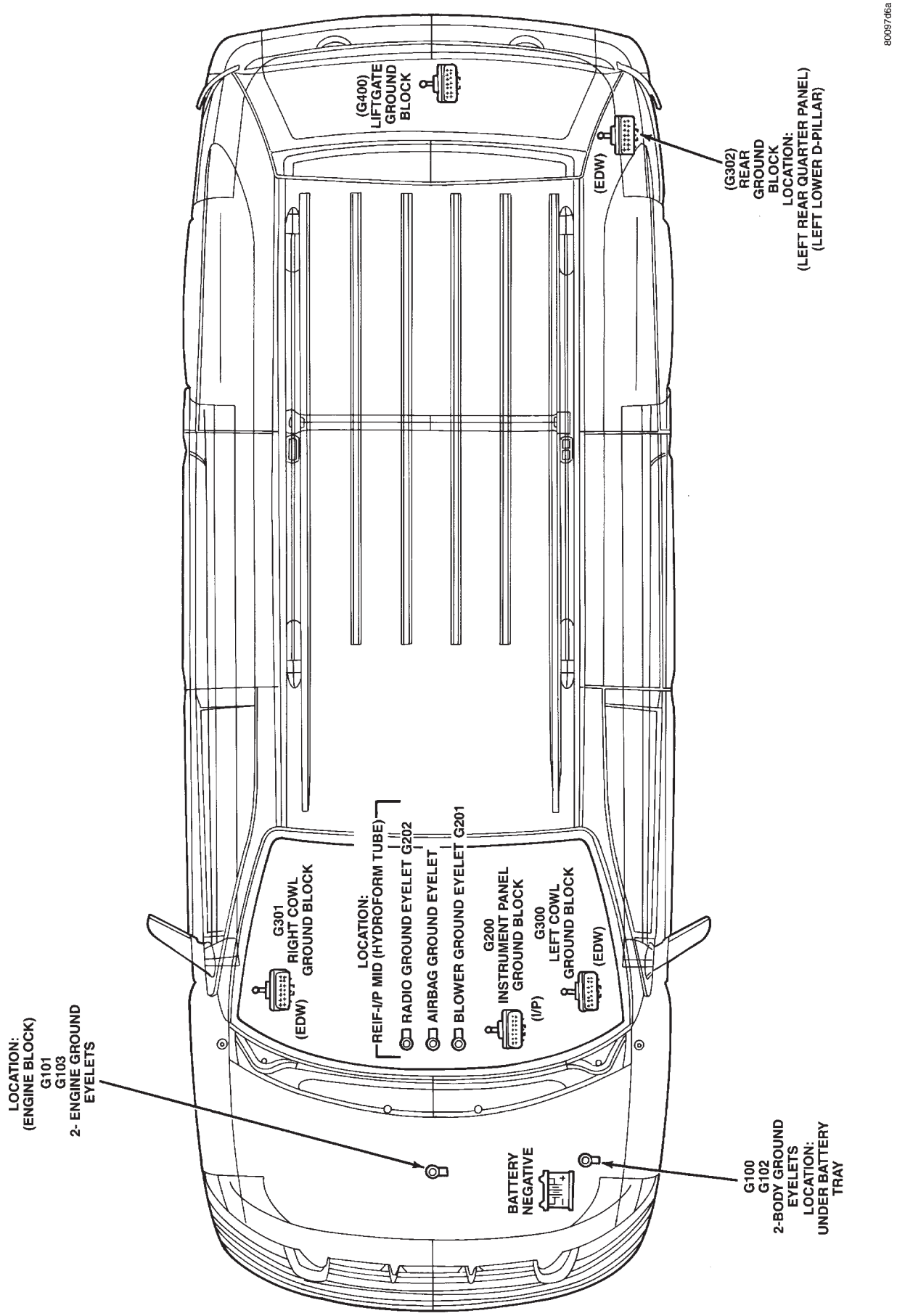

Fig. 1 Ground Locations—LHD

DESCRIPTION AND OPERATION (Continued)

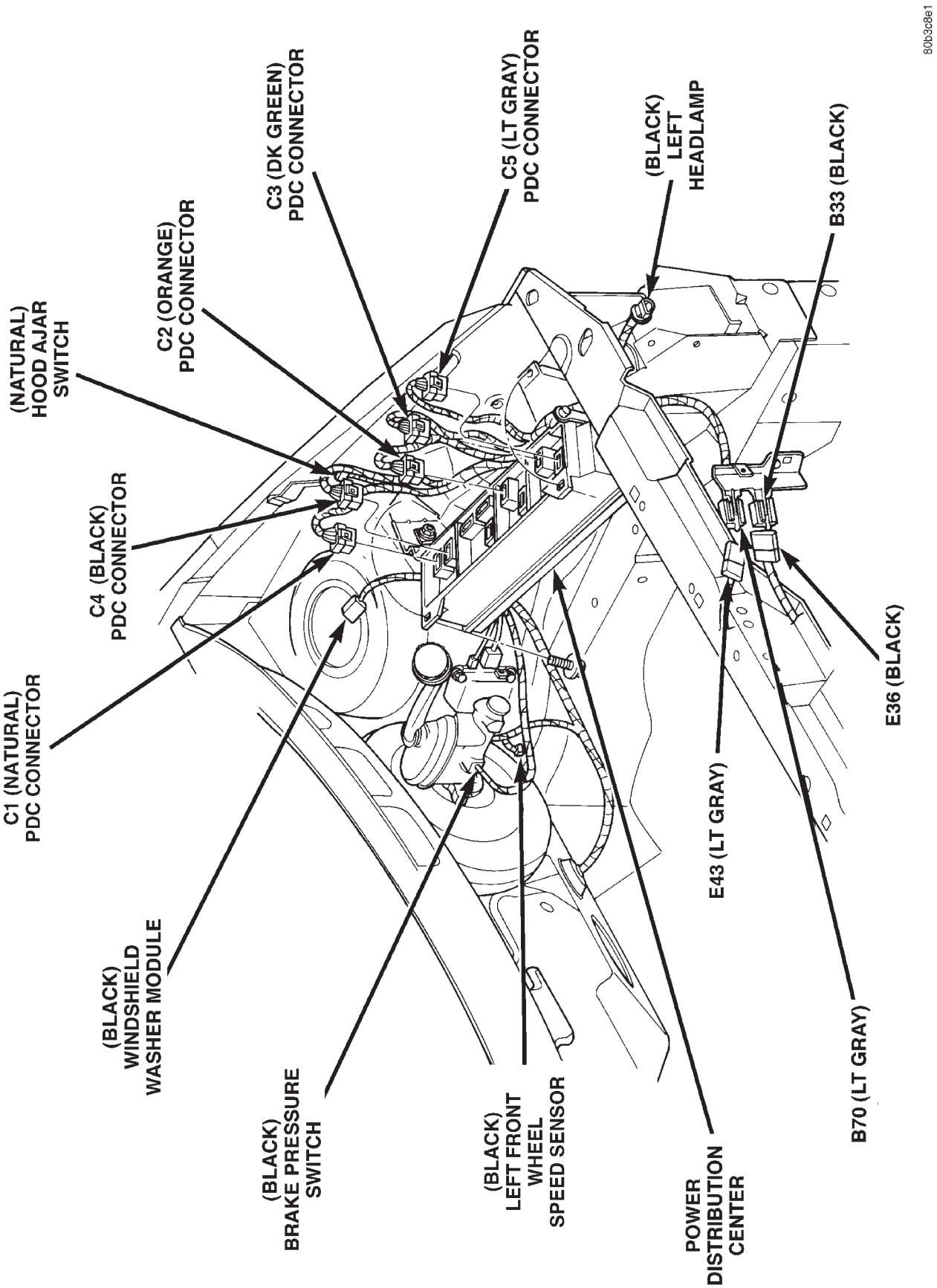

Fig. 2 Engine Compartment Connetions—LHD

DESCRIPTION AND OPERATION (Continued)

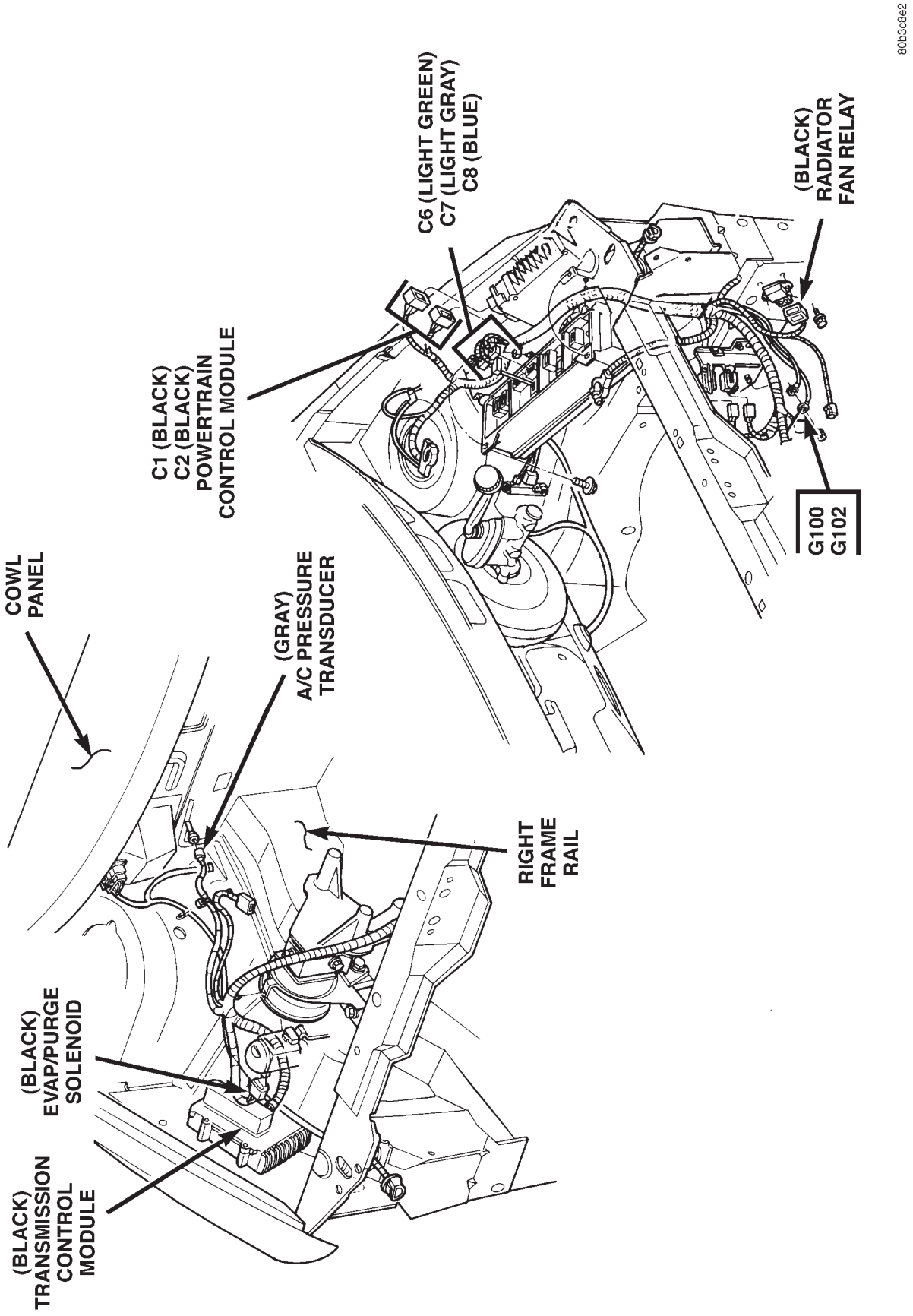

Fig. 3 Engine Compartment Connections—LHD

DESCRIPTION AND OPERATION (Continued)

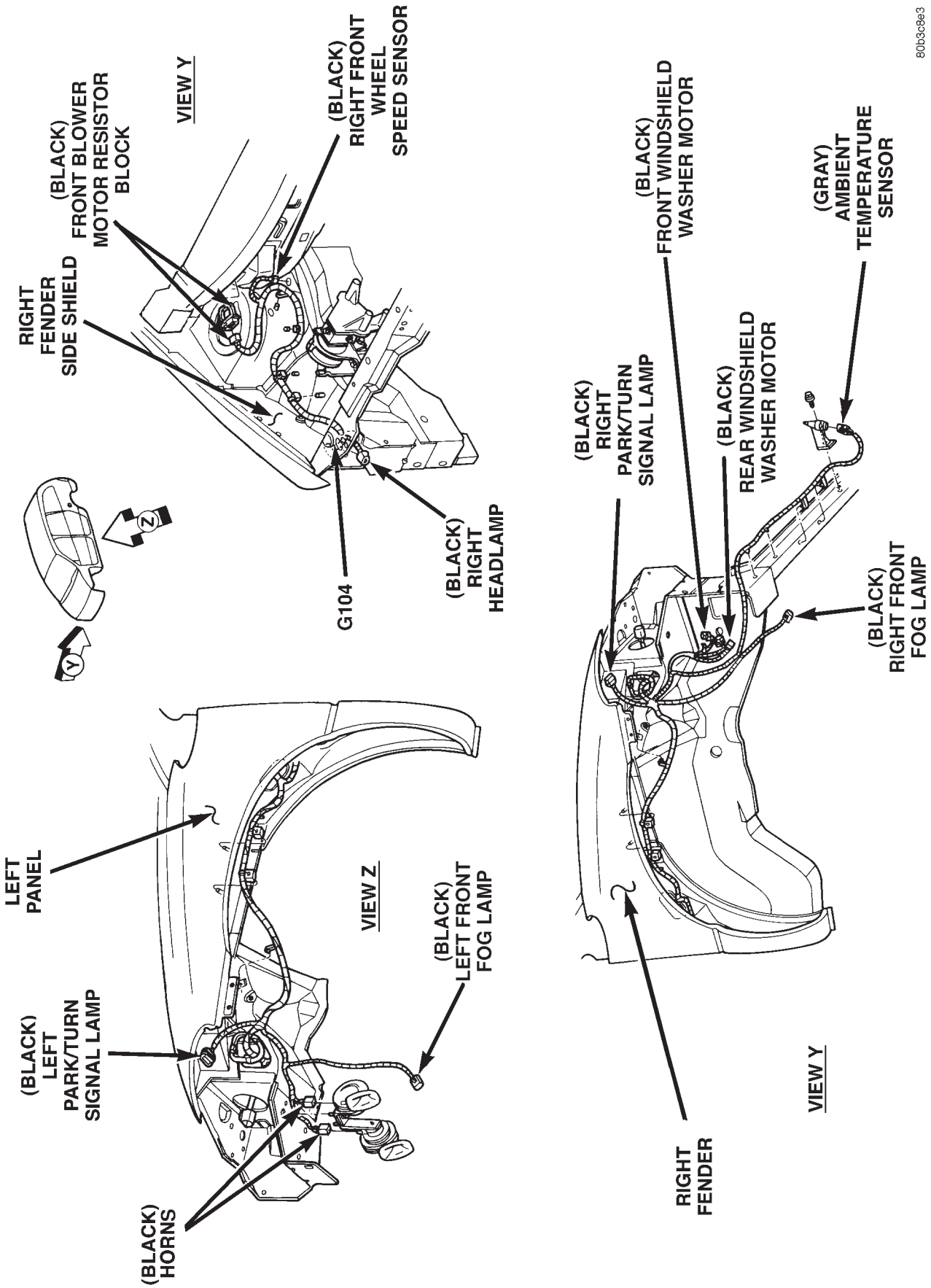

Fig. 4 Engine Compartment Connections—LHD

DESCRIPTION AND OPERATION (Continued)

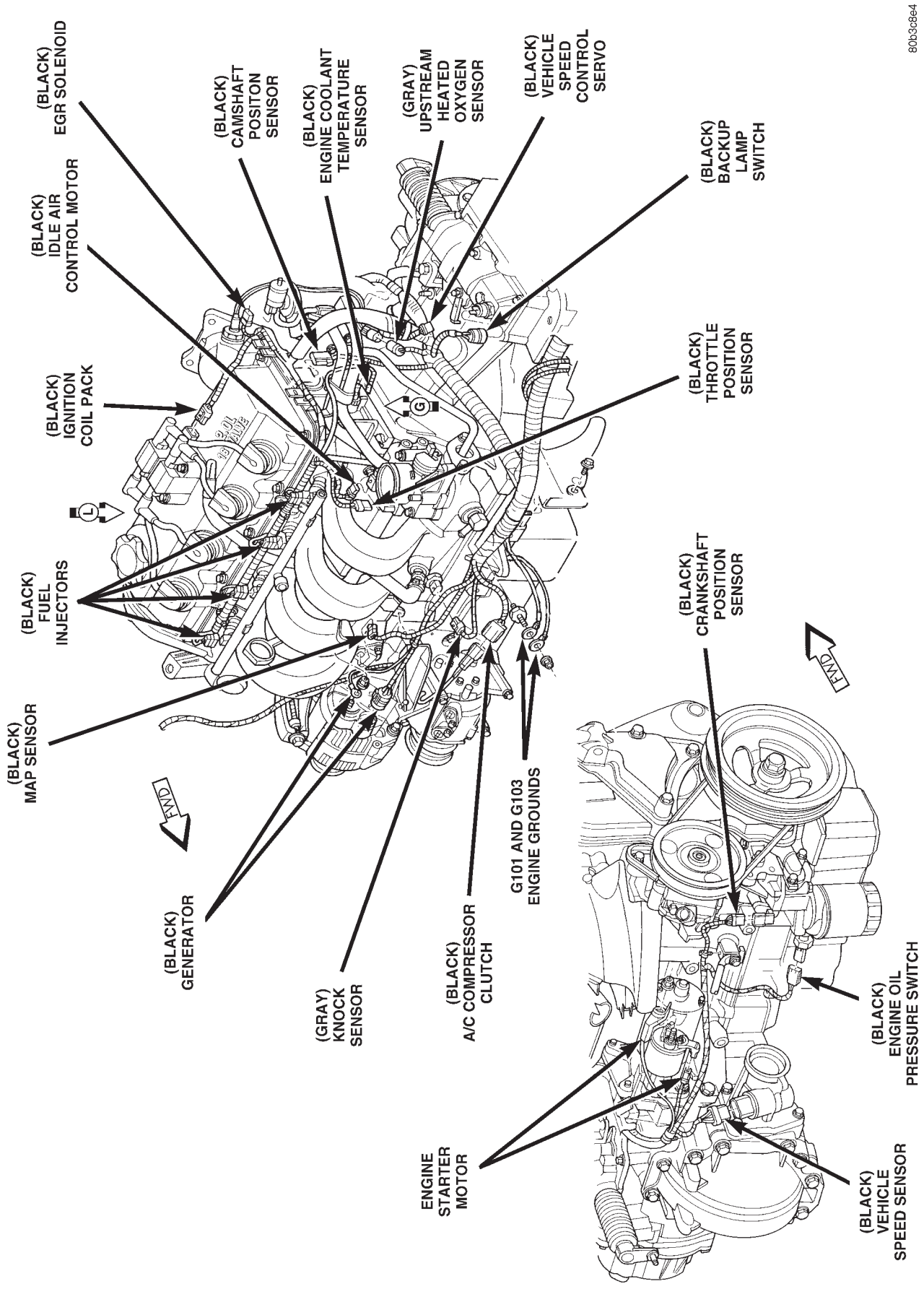

Fig. 5 Engine Connections—2.0L, LHD

DESCRIPTION AND OPERATION (Continued)

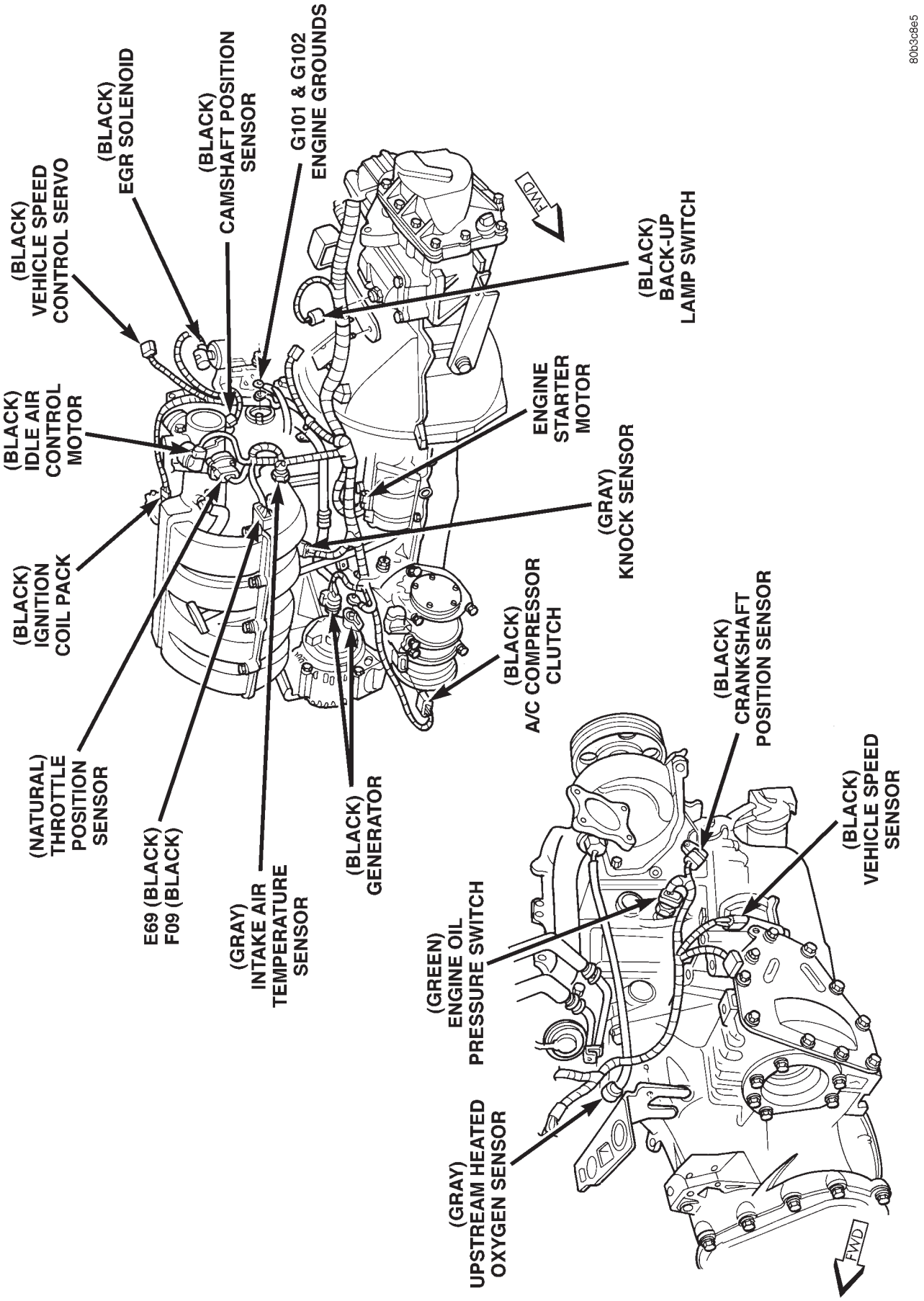

Fig. 6 Engine Connections—2.4L (M/T), LHD

DESCRIPTION AND OPERATION (Continued)

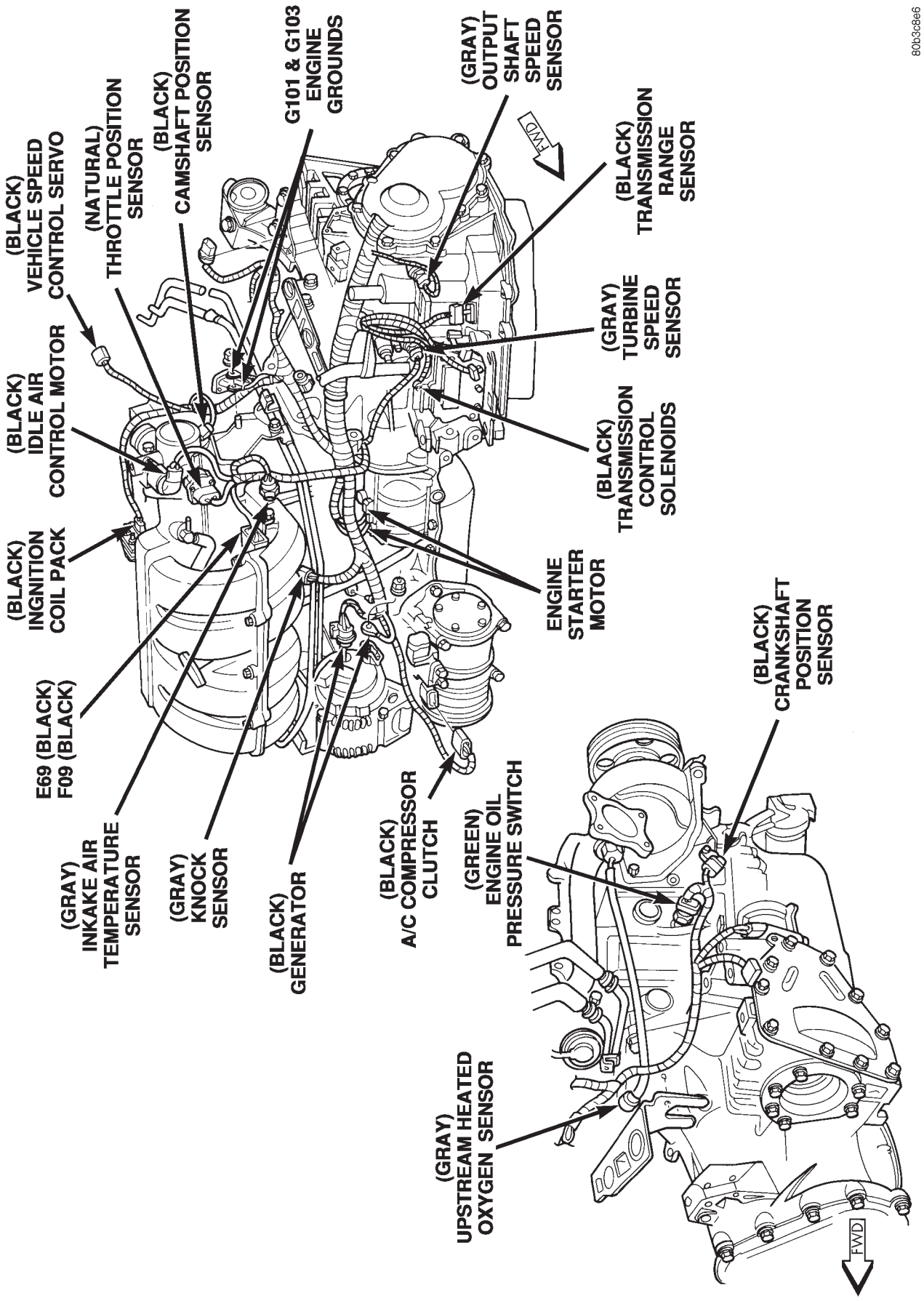

Fig. 7 Engine Connections—2.4L (A/T), LHD

DESCRIPTION AND OPERATION (Continued)

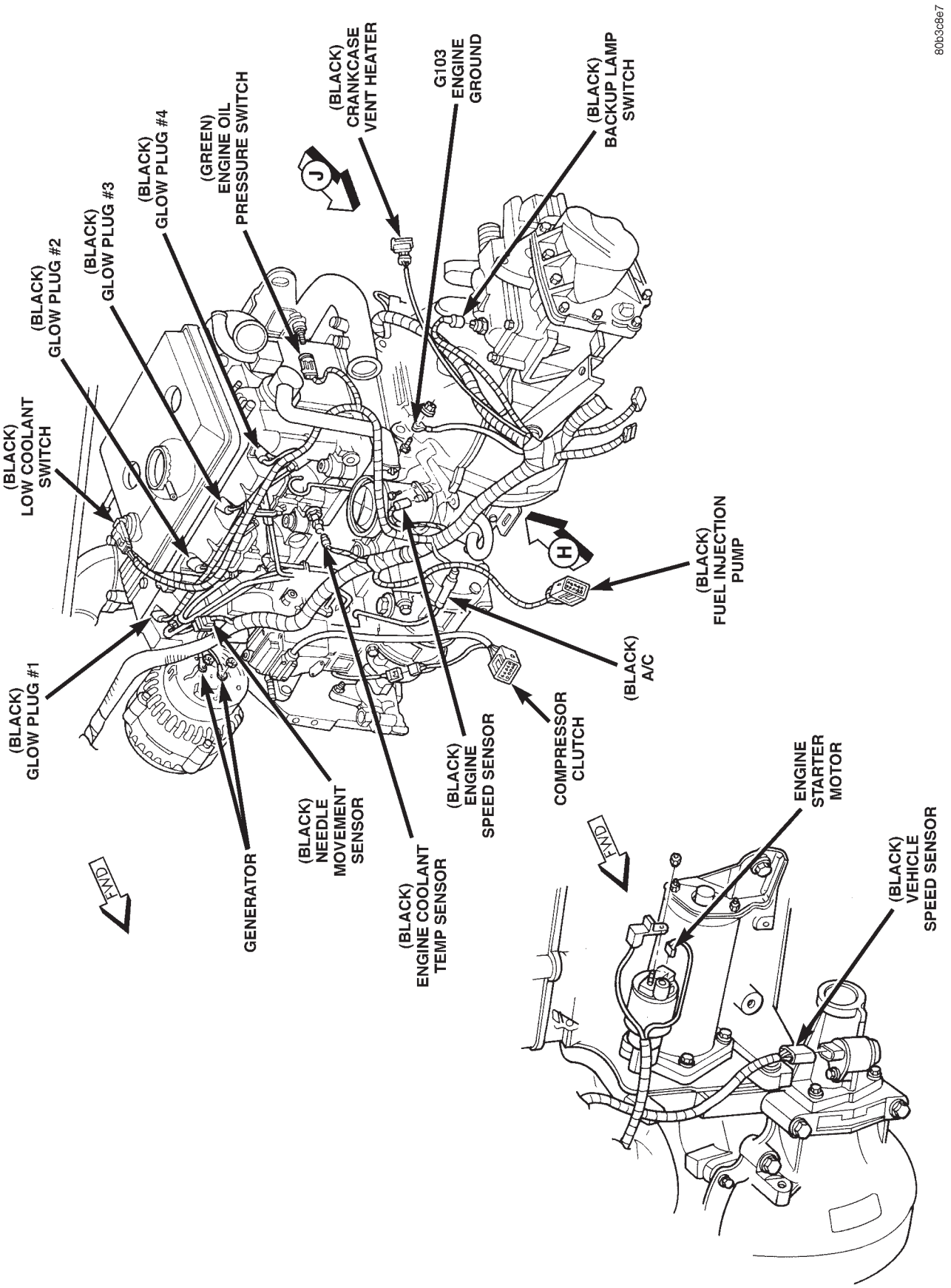

Fig. 8 Engine Connections—2.5L, LHD

DESCRIPTION AND OPERATION (Continued)

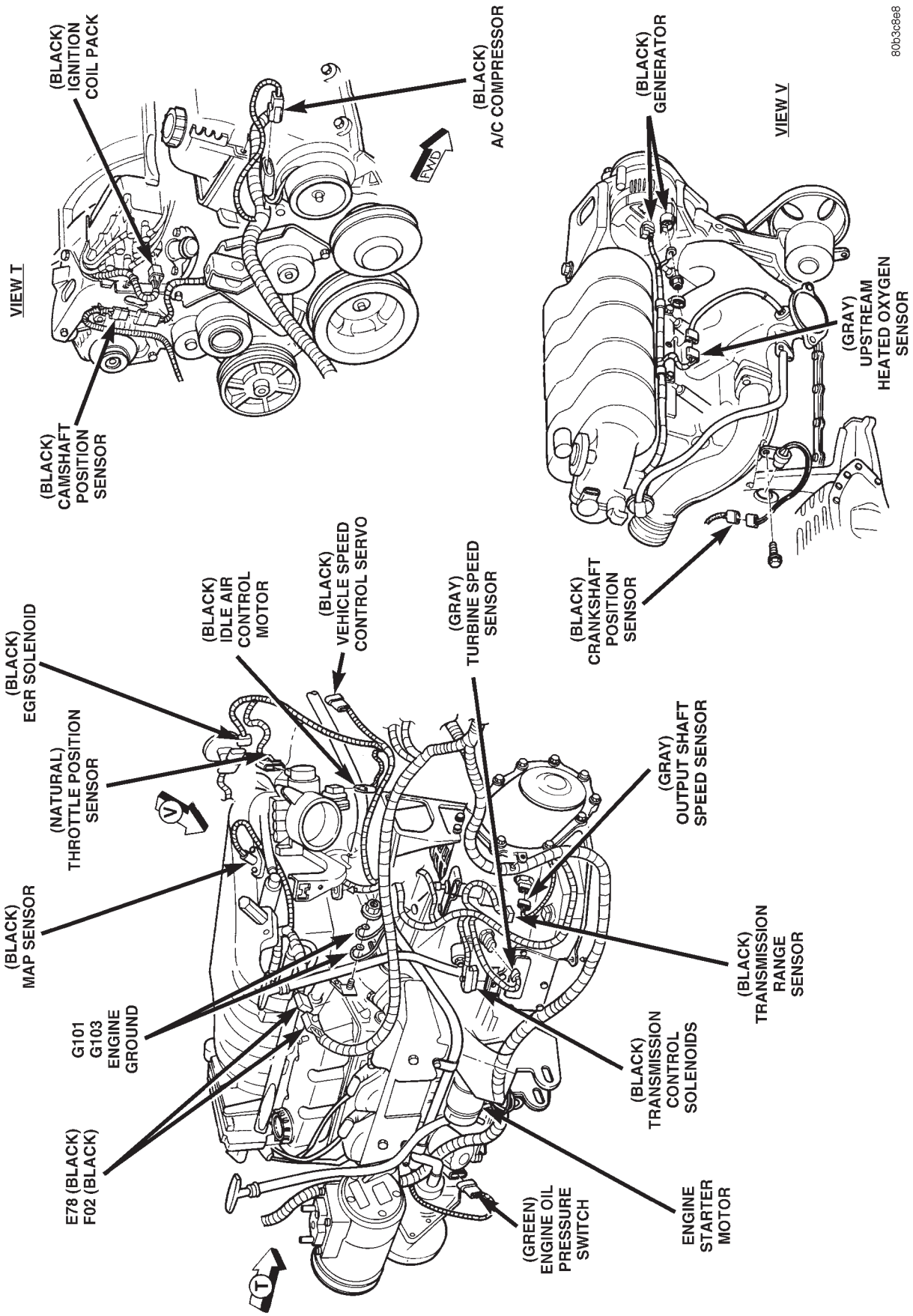

Fig. 9 Engine Connections—3.3L, 3.8L, LHD

DESCRIPTION AND OPERATION (Continued)

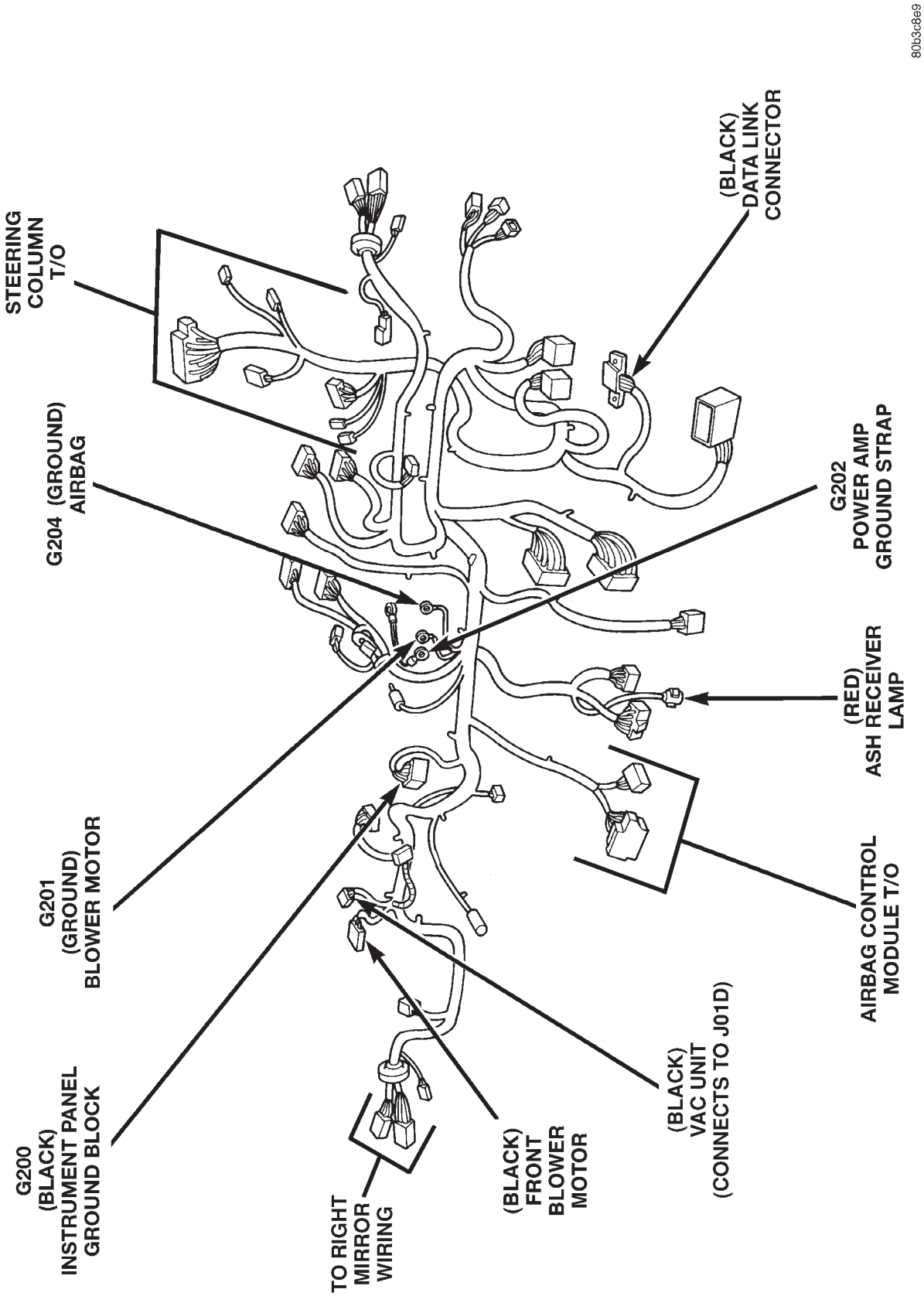

Fig. 10 Instrument Panel Connections—LHD

DESCRIPTION AND OPERATION (Continued)

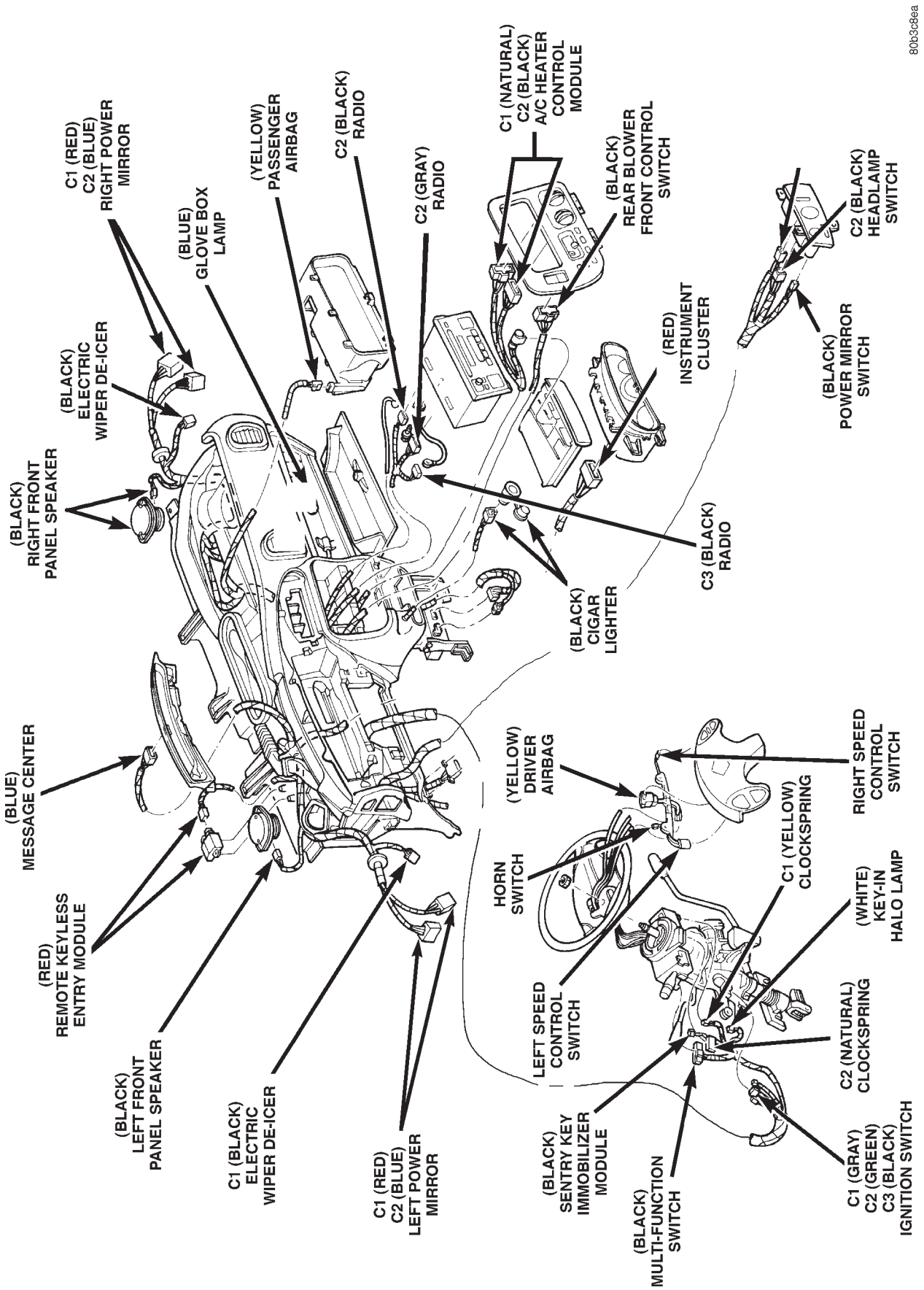

Fig. 11 Instrument Panel Connections—LHD

DESCRIPTION AND OPERATION (Continued)

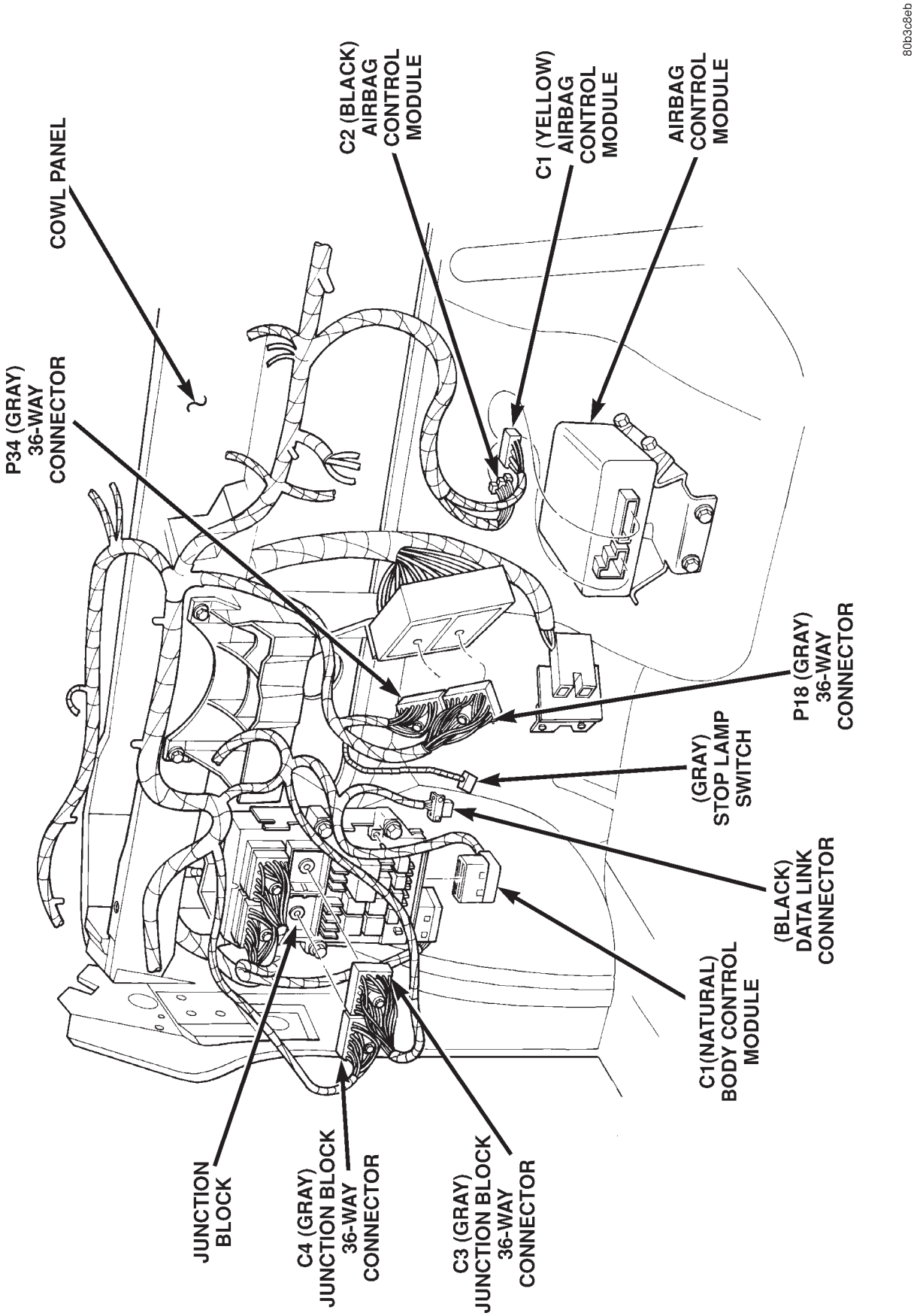

Fig. 12 Instrument Panel Connections—LHD

DESCRIPTION AND OPERATION (Continued)

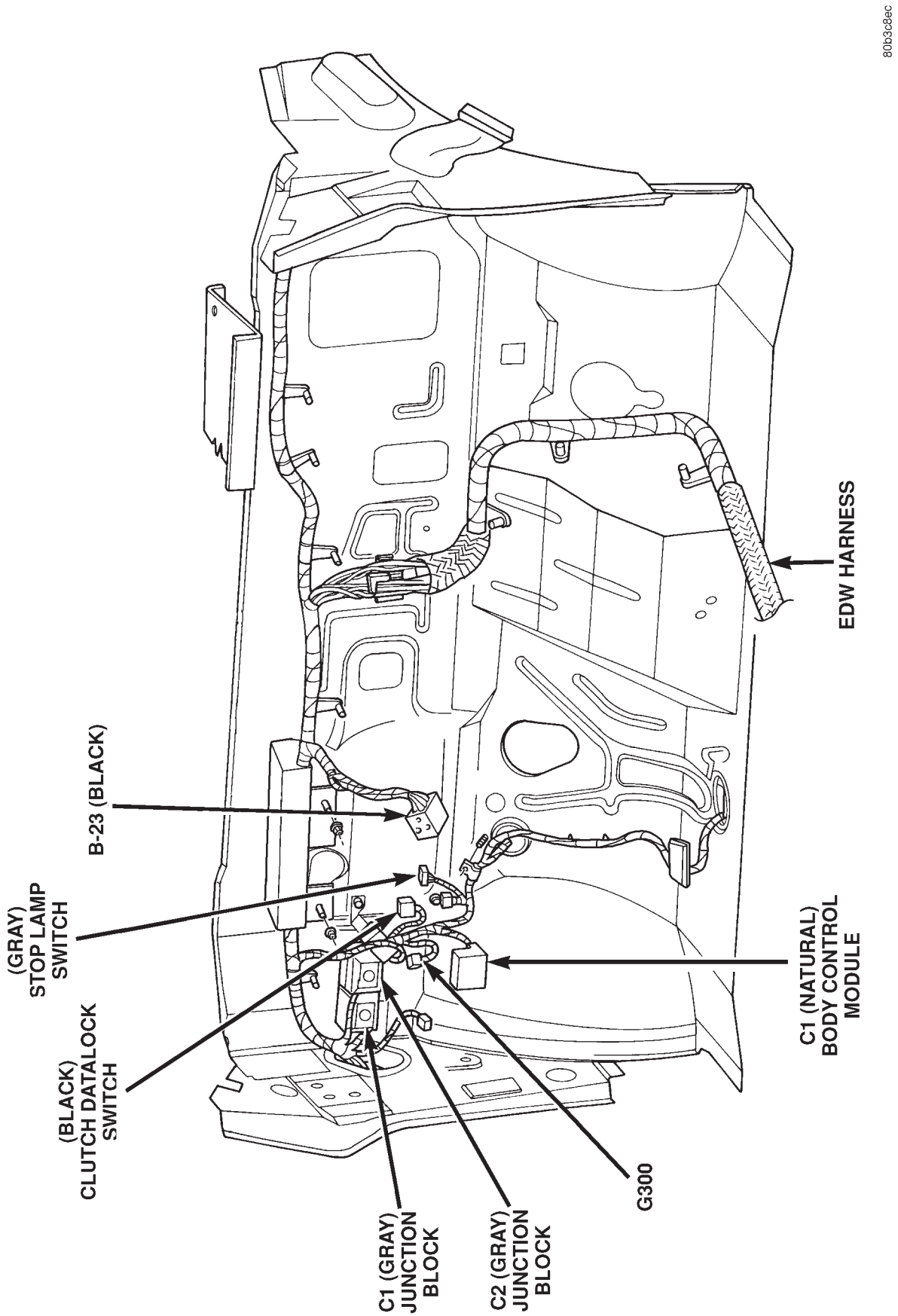

Fig. 13 Cowl Panel Connections—LHD

DESCRIPTION AND OPERATION (Continued)

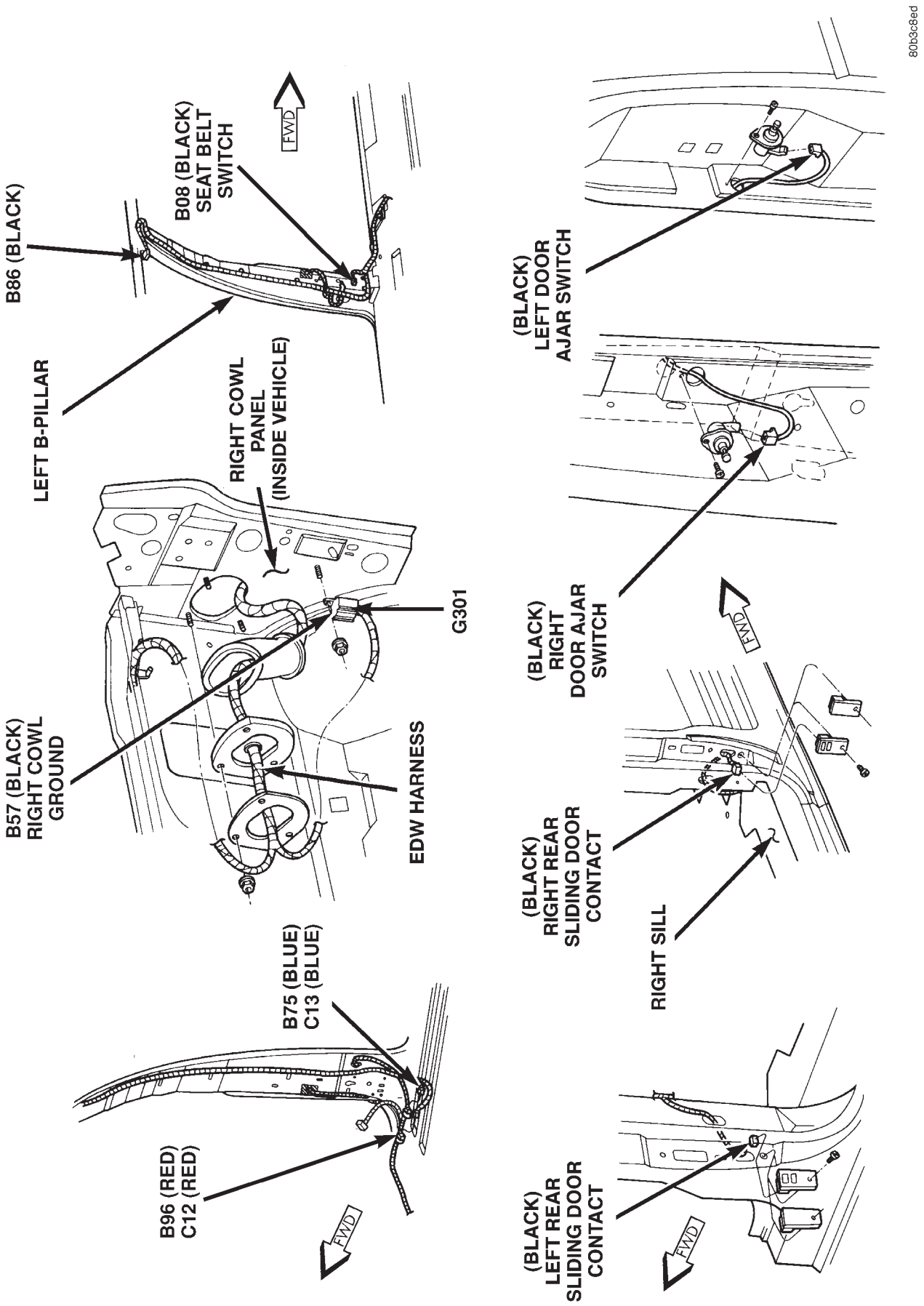

Fig. 14 Body Connections—LHD

DESCRIPTION AND OPERATION (Continued)

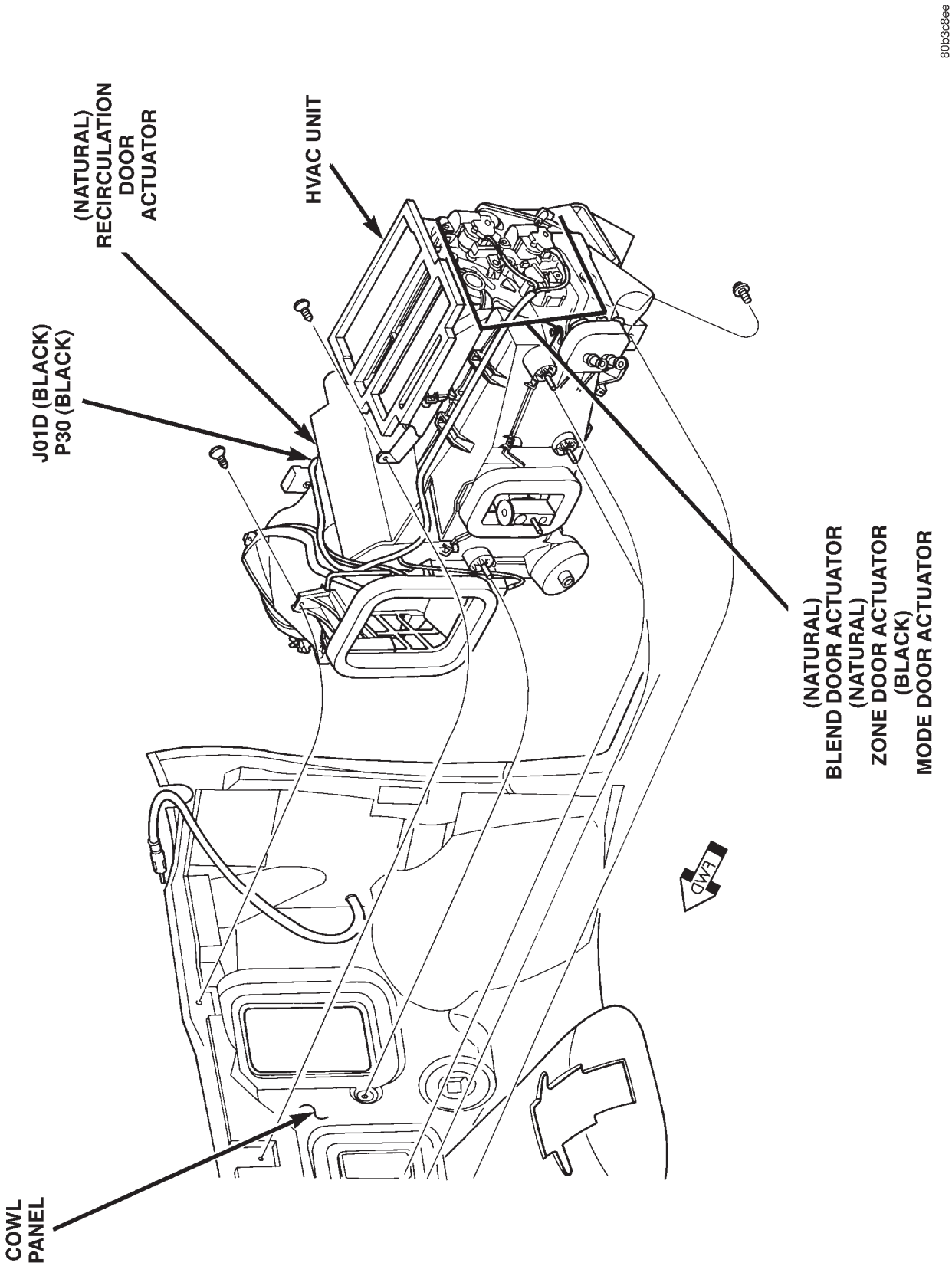

Fig. 15 HVAC Connections—LHD

DESCRIPTION AND OPERATION (Continued)

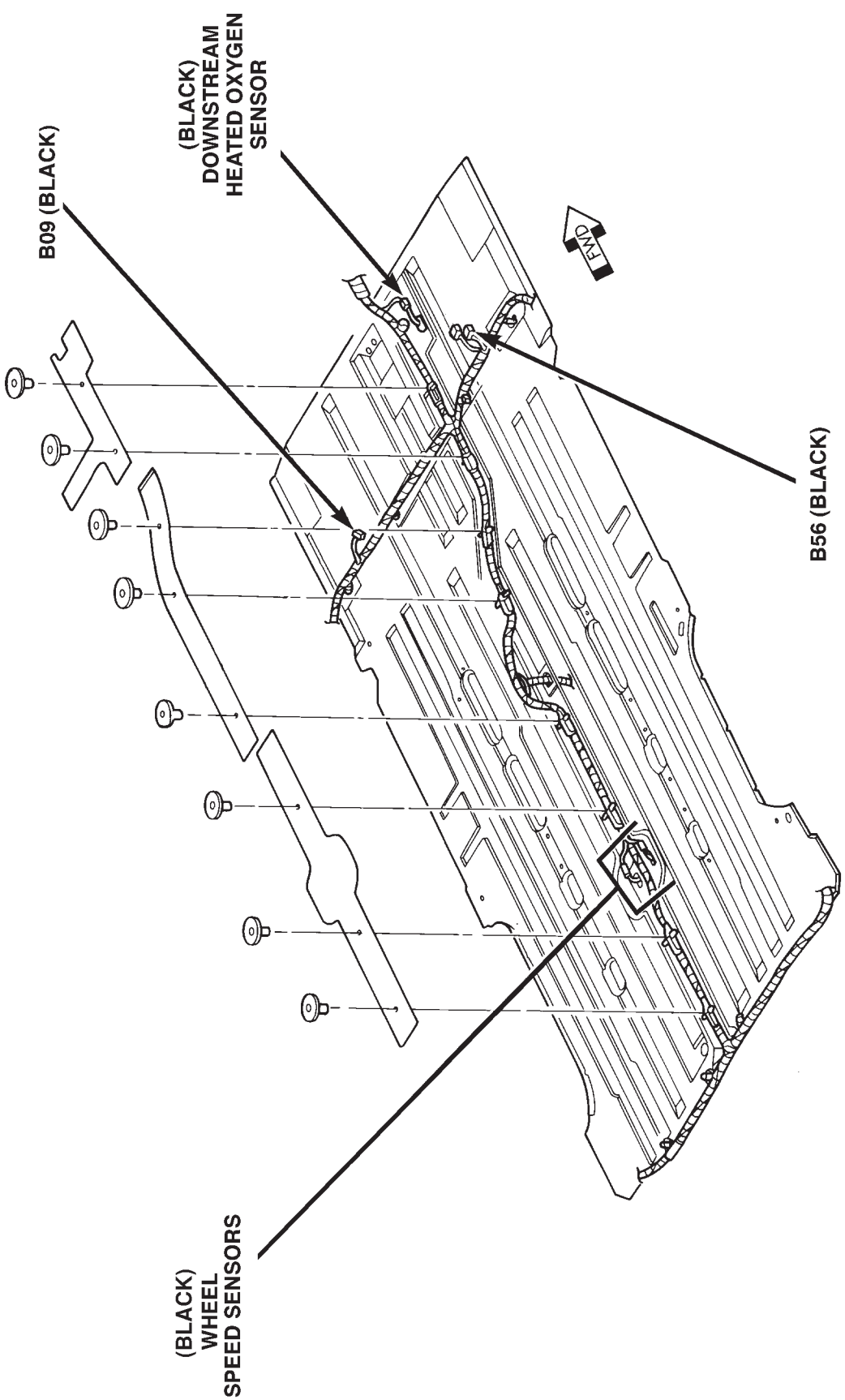

Fig. 16 Body Connections—LHD

DESCRIPTION AND OPERATION (Continued)

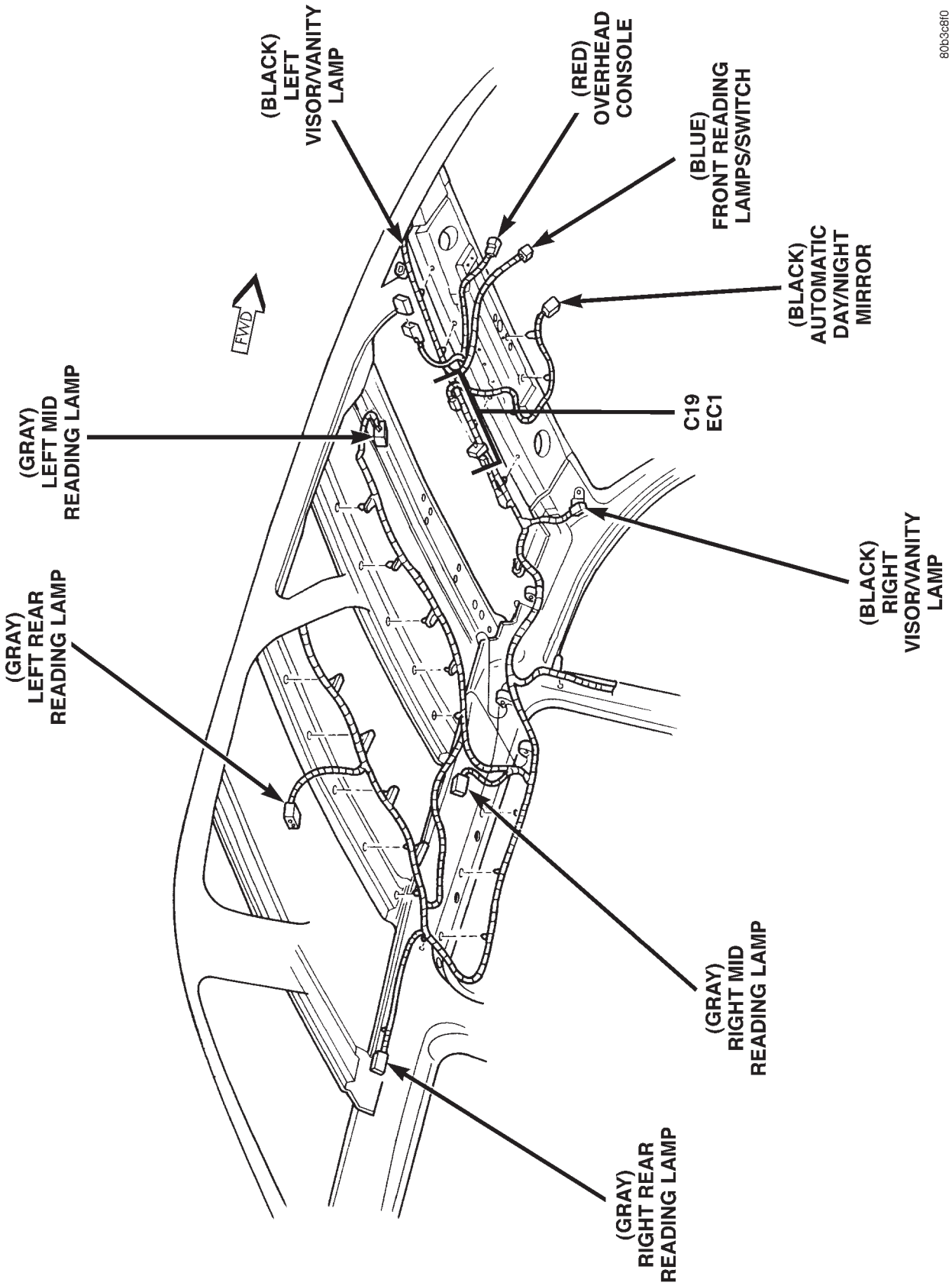

Fig. 17 Roof Panel Connections—LHD

DESCRIPTION AND OPERATION (Continued)

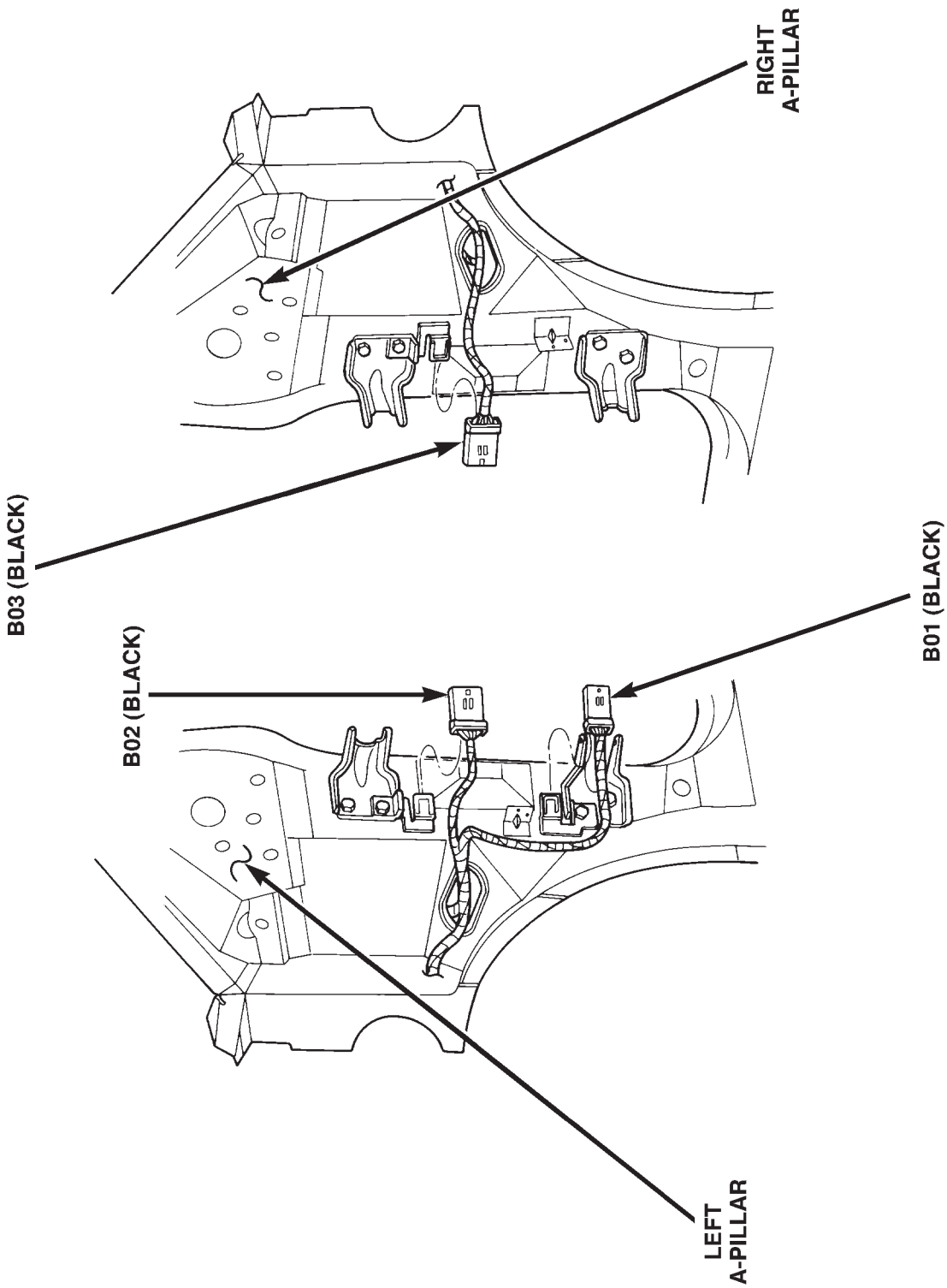

Fig. 18 Body to Door Connections—LHD

DESCRIPTION AND OPERATION (Continued)

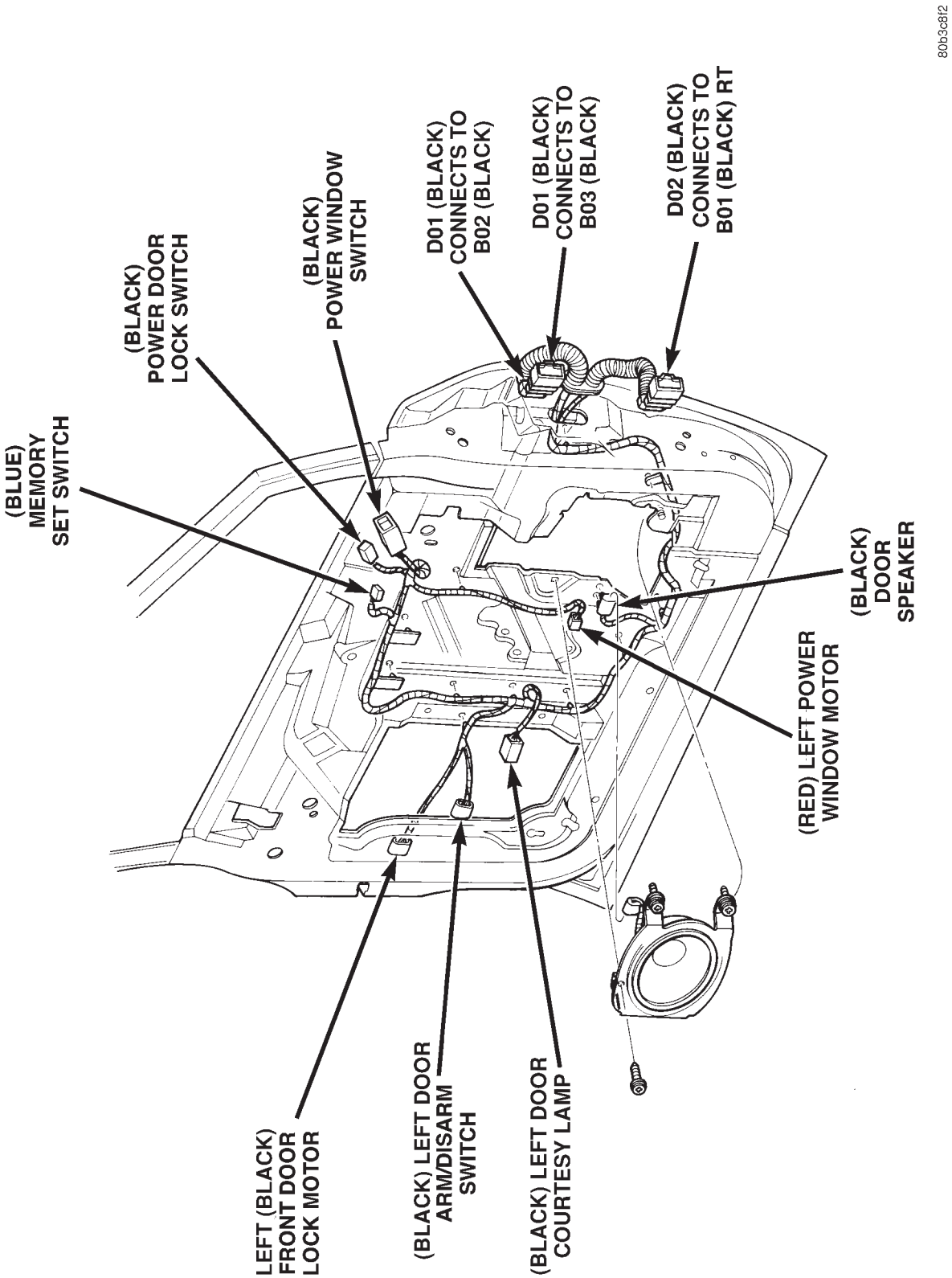

Fig. 19 Door Connections—LHD

DESCRIPTION AND OPERATION (Continued)

80b3c903

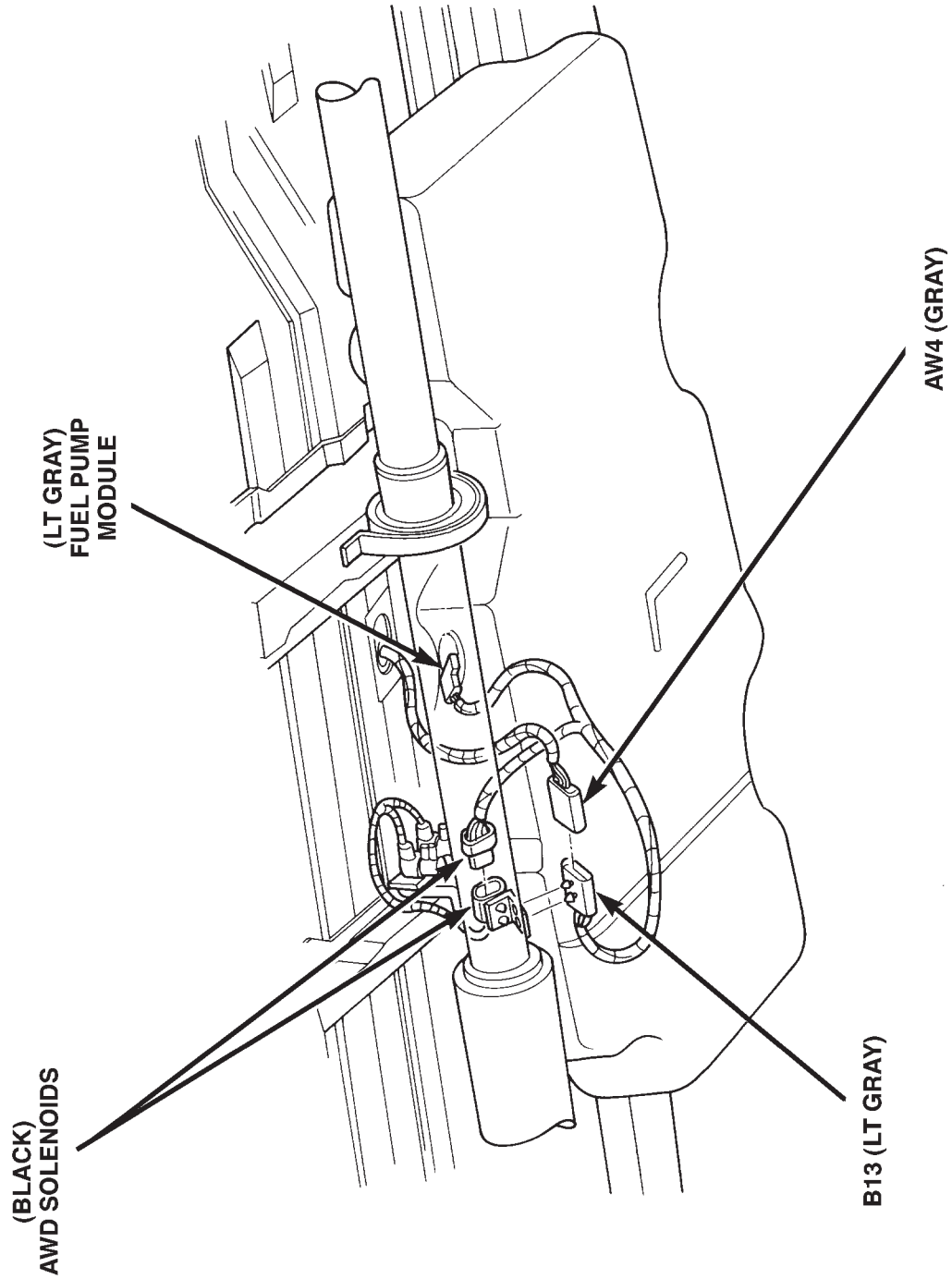

Fig. 20 Underbody Connections—LHD

DESCRIPTION AND OPERATION (Continued)

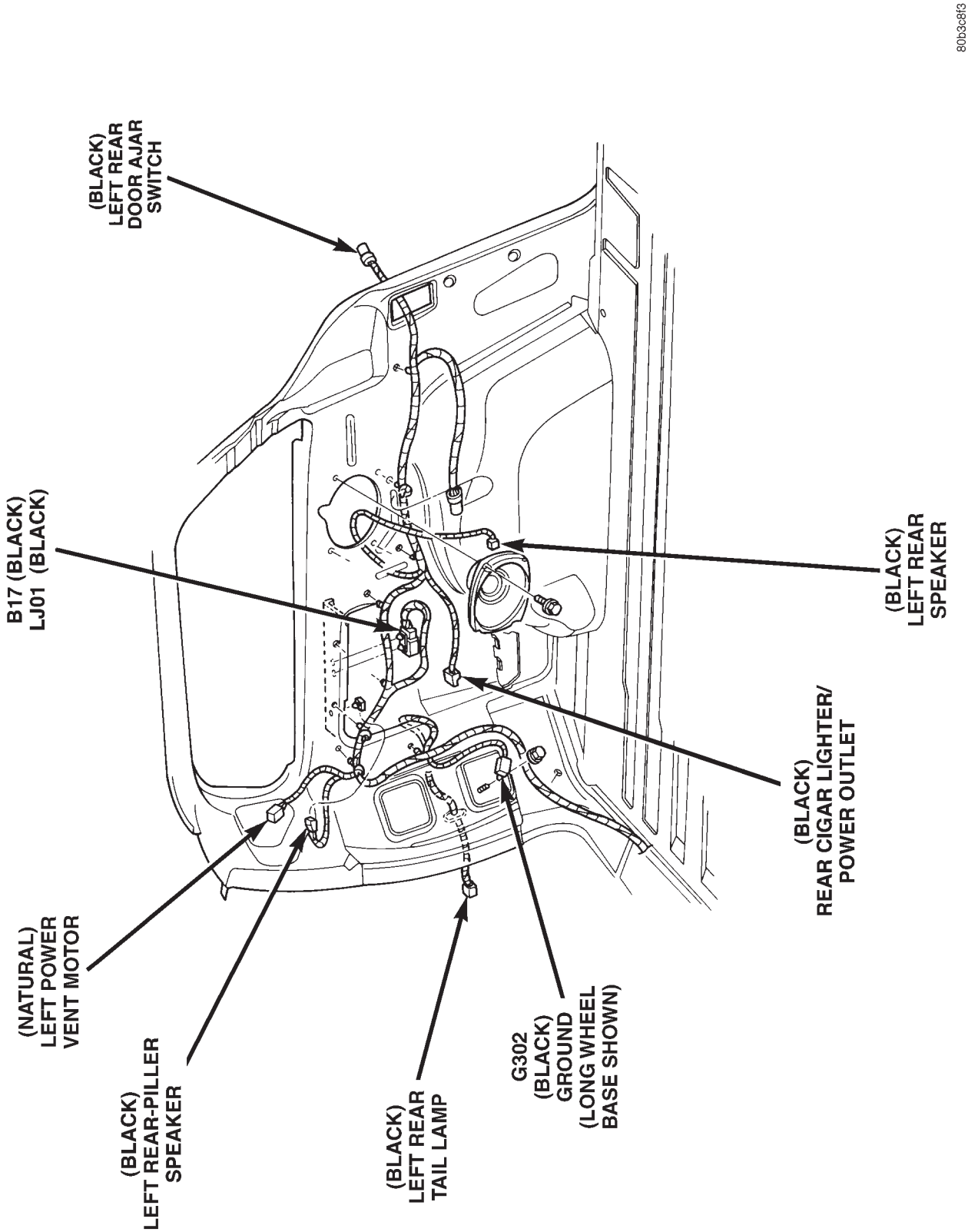

Fig. 21 Left Rear Quarter Connections—LHD

DESCRIPTION AND OPERATION (Continued)

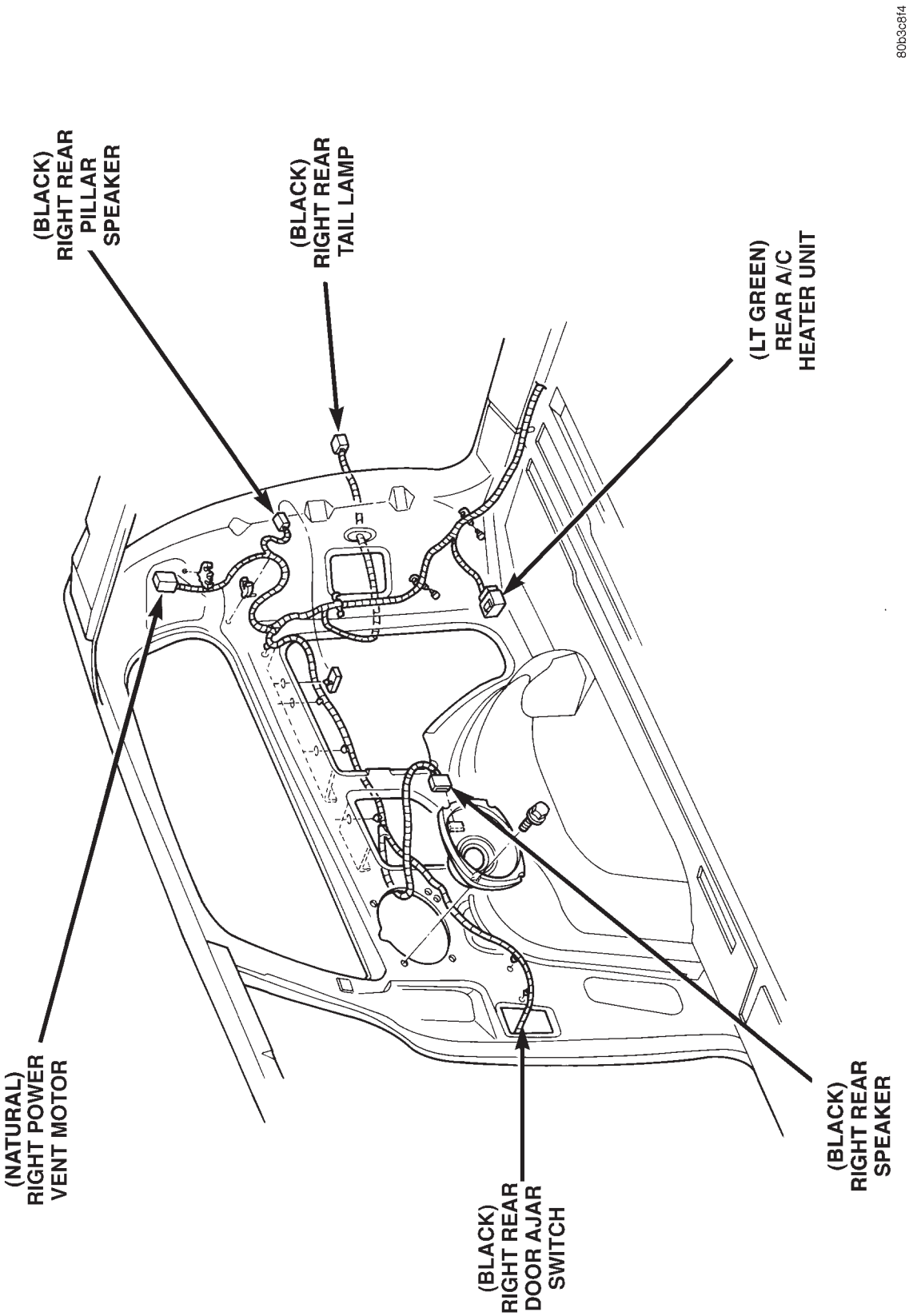

Fig. 22 Right Rear Quarter Connections—LHD

DESCRIPTION AND OPERATION (Continued)

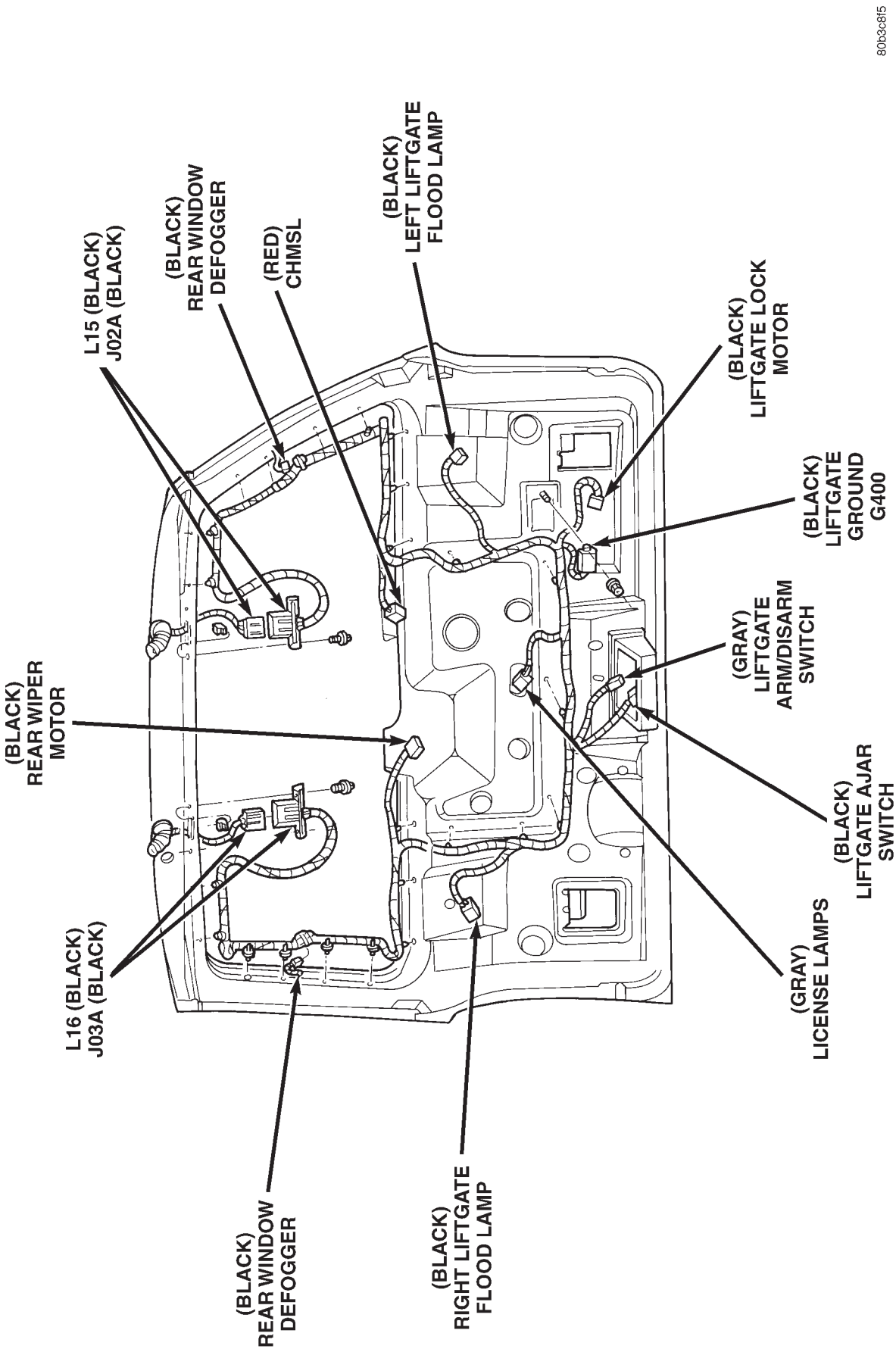

Fig. 23 Liftgate Connections—LHD

DESCRIPTION AND OPERATION (Continued)

CONNECTOR/GROUND LOCATIONS

For items not shown in this section a N/S is placed in the Fig. column.

Component/ Ground	Color	Location	Fig.
A/C Compressor Clutch	BK	Top of A/C Compressor	5, 6, 7, 8, 9
A/C-Heater Control Module C1	NAT	Rear of Control	11
A/C-Heater Control Module C2	BK	Rear of Control	11
A/C Pressure Transducer	GY	RT Side Cowl	3
A/C Zone Door Actuator	NAT	LT Side of HVAC	15
Airbag Control Module C1	YL	Rear of I.P. Center Stack	12
Airbag Contol Module C2	BK	Rear of I.P. Center Stack	12
All Wheel Drive Solenoid	BK	Near Fuel Tank	20
Ambient Temperature Sensor	GY	On Radiator Closure Panel	4
Ash Receiver Lamp	RD	At Lamp	10
Automatic Day/Night Mirror	BK	At Mirror	17
B01	BK	RT Kick Panel	18
B02	BK	RT Kick Panel	18
B03	BK	LT Kick Panel	18
B09	BK	Under Seat	16
B17	BK	LT Quarter Panel	21
B23	BK	RT of Steering Column	13
B33	BK	LT Frame Rail	2
B56	BK	Under Seat	16
B70	LT/GY	LT Frame Rail	2
B75	BL	Bottom of RT B-Pillar	14
B98	BK	Rear of RT Tail Lamp	N/S
B99	BK	Rear of LT Tail Lamp	N/S
B120	BK	LT Kick Panel	N/S
Backup Lamp Switch (M/T)	BK	On Transmission	5, 6, 8
Blend Door Actuator	NAT	LT Side of HVAC	15
Body Control Module C1	NAT	On Junction Block	12
Body Control Module C2	NAT	On Junction Block	12
Brake Pressure Switch	BK	On Master Cylinder	2
C19		At Top Center of Windshield	17
C20		Bottom of RT B-Pillar	N/S
Camshaft Position Sensor 2.4L	BK	Rear of Cylinder Head	6, 7
Camshaft Position Sensor 3.3L, 3.8L	BK	RT Side of Engine	9
Center Dome Lamp	BK	At Lamp	N/S
CHMSL	RD	Rear of CHMSL	23
Clockspring C1	YL	Rear of Clockspring	11
Clockspring C2	NAT	Rear of Clockspring	11
Clutch Switch	BK	Top of Clutch Pedal	13
Controller Anti-Lock Brake	BK	LT Side of Engine Compartment	N/S
Crankshaft Position Sensor	BK	Rear of Engine	5, 6, 7, 9
D01	BK	On Kick Panel	19
D02	BK	On Kick Panel	19
Data Link Connector	BK	LT of Steering Column	12

DESCRIPTION AND OPERATION (Continued)

Component/ Ground	Color	Location	Fig.
Downstream Heated Oxygen Sensor	BK	Front Center of Floor Pan	16
Driver Airbag	YL	Rear of Airbag	11
E36	BK	LT Frame Rail	2
E40	BK	At Radiator Fan Module	N/S
E43	LT/GY	LT Frame Rail	2
E69	BK	LT Side of Intake	6, 7
E78	BK	Near Throttle Body	9
EC1		At Top Center of Windshield	17
EGR Solenoid	BK	LT Rear of Engine	6, 9
Electric Wiper De-Icer C1	BK	At Right Base of Windshield	11
Electric Wiper De-Icer C2	BK	At Left Base of Windshield	11
Engine Coolant Temp Sensor 2.4L	BK	On Cylinder Block	N/S
Engine Coolant Temp Sensor 3.3L, 3.8L	BK	On Cylinder Block	N/S
Engine Oil Pressure Switch	GN	On Cylinder Block	5, 6, 7, 8, 9
Engine Starter Motor		Rear of Starter	5, 6, 7, 8, 9
EVAP/Purge Solenoid	BK	RT Motor Mount	3
Evaporator Temperature Sensor	BK	RT Side of HVAC	N/S
F02	BK	Near Throttle Body	9
F09	BK	LT Side of Intake	6, 7
Front Blower Motor	BK	At Motor	10
Front Blower Motor Resistor Block	BK	LT Side of Engine	2
Front Cigar Lighter	BK	Rear of Lighter	11

Component/ Ground	Color	Location	Fig.
Front Reading Lamps/Switch	BL	At Lamp	17
Front Washer Motor	BK	Bottom of Reservior	4
Fuel Injector #1	BK	At Injector	N/S
Fuel Injector #2	BK	At Injector	N/S
Fuel Injector #3	BK	At Injector	N/S
Fuel Injector #4	BK	At Injector	N/S
Fuel Injector #5	BK	At Injector	N/S
Fuel Injector #6	BK	At Injector	N/S
Fuel Pump Module	GY	Side of Fuel Tank	20
G100		LT Frame Rail	3
G101 2.4L		Rear of Cylinder Head	6, 7
G101 3.3L, 3.8L		Rear of Cylinder Block	9
G102		LT Frame Rail	3
G103 2.4L		Rear of Cylinder Head	6, 7
G103 3.3L, 3.8L		Rear of Cylinder Block	9
G104		Near T/O for RT Headlamp	N/S
G200		Left of I.P. Center Stack	10
G201		I.P. Center Support	10
G202		I.P. Center Support	10
G204		I.P. Center Support	10
G300	BK	LT Kick Panel	13
G301		RT Kick Panel	13, 14
G302	BK	LT Quarter Panel	21
G400	BK	In Liftgate	23
Generator	BK	Rear of Generator	5, 6, 7, 8, 9
Glove Box Lamp	BL	Rear of Glove Box	11
Headlamp Dimmer Switch	BK	Part of Multifunction Switch	11

DESCRIPTION AND OPERATION (Continued)

Component/ Ground	Color	Location	Fig.
Headlamp Switch C1	NAT	Rear of Switch	11
Headlamp Switch C2	BK	Rear of Switch	11
Headlamp Washer Motor		Bottom of Reservior	N/S
High Note Horn	BK	LT Frame Rail	4
Hood Ajar Switch	NAT	LT Fender	2
Horn Switch		Rear of Driver Airbag	11
Idle Air Control Motor	BK	On Throttle Body	5, 6, 7, 8, 9
Ignition Coil Pack 2.4L	BK	Top of Valve Cover	6, 7
Ignition Coil Pack 3.3L, 3.8L	BK	RT Side of Engine	9
Ignition Switch C1	GY	Rear of Switch	11
Ignition Switch C2	GN	Rear of Switch	11
Ignition Switch C3	BK	Rear of Switch	11
Instrument Cluster	RD	Rear of Cluster	11
Intake Air Temp Sensor	GY	On Intake	6, 7
J01D	BK	RT Side of HVAC	15
J02A	BK	Top of Liftgate	23
JO3A	BK	Top of Liftgate	23
Junction Block C1	GY	On Junction Block	12, 13
Junction Block C2	GY	On Junction Block	12, 13
Junction Block C3	GY	On Junction Block	12
Junction Block C4	GY	On Junction Block	12
Key-In Halo Lamp	WT	Rear of Lamp	11
Knock Sensor 2.4L	GY	Front of Cylinder Block	6, 7
Knock Sensor 3.3L, 3.8L	GY	Front of Cylinder Block	N/S
L15	BK	Top of Liftgate	23

Component/ Ground	Color	Location	Fig.
L16	BK	Top of Liftgate	23
Left Combination Relay	BK	LT Rear Quarter Panel	N/S
Left Door Ajar Switch	BK	LT B-PIllar	12
Left Door Arm/Disarm Switch	BK	At Switch	19
Left Door Courtesy Lamp	BK	At Lamp	19
Left Door Speaker	BK	At Speaker	19
Left Fog Lamp	GY	At Lamp	4
Left Front Door Lock Motor	BK	At Motor	19
Left Front Panel Speaker	BK	At Speaker	11
Left Front Park/Turn Signal Lamp	BK	At Lamp	4
Left Front Wheel Speed Sensor	BK	LT Fender Side Shield	2
Left Front Window Motor	RD	At Motor	19
Left Headlamp	BK	At Lamp	2
Left Headlamp Leveling Motor	BK	At Motor	N/S
Left Liftgate Flood Lamp	BK	At Lamp	23
Left Mid Reading Lamp	GY	At Lamp	17
Left Power Door Lock Switch	BK	At Switch	19
Left Power Mirror C1	RD	At Mirror	11
Left Power Mirror C2	BL	At Mirror	11
Left Power Window Switch	OR	At Switch	19
Left Rear Lamp Assembly	BK	At Lamp	21
Left Rear Door Ajar Switch	BK	LT C-Pillar	21
Left Rear Pillar Speaker	BK	At Speaker	21

DESCRIPTION AND OPERATION (Continued)

Component/ Ground	Color	Location	Fig.
Left Rear Reading Lamp	GY	At Lamp	17
Left Rear Sliding Door Contact	BK	LT B-Pillar	14
Left Rear Sliding Door Lock Motor	BK	At Motor	N/S
Left Rear Speaker	BK	At Speaker	21
Left Rear Vent Motor	NAT	At Motor	21
Left Rear Wheel Speed Sensor	GY	Center Rear of Floor Pan	16
Left Repeater Lamp	GY	At Lamp	N/S
Left Speed Control Switch		Left Side of Steering Wheel Pad	11
Left Stop/Turn Signal Relay	BK	LT Quarter Panel	N/S
Left Visor/Vanity Lamp	BK	At Lamp	17
License Lamp	GY	At Lamps	23
Liftgate Ajar Switch	BK	At Latch	23
Liftgate Arm/Disarm Switch	GY	At Key Cylinder	23
Liftgate Lock Motor	BK	At Motor	23
LJ01	BK	LT Quarter Panel	21
Low Note Horn	BK	LT Frame Rail	4
Low Washer Fluid Level Sensor	BK	Bottom of Reservior	4
MAP Sensor 2.4L	BK	On Intake	N/S
MAP Sensor 3.3L, 3.8L	BK	Near Throttle Body	9
Memort Seat/Mirror Module	BK	RT Front of Floor Pan	16
Memory Set Switch	BL	At Switch	19

Component/ Ground	Color	Location	Fig.
Message Center	BL	Rear of Message Center	11
Mode Door Actuator	BK	LT Side of HVAC	15
Multi Function Switch	BK	Rear of Switch	11
Name Brand Speaker Relay	LT/GY	LT of Steering Column	N/S
Output Shaft Speed Sensor	GY	Front of Transmission	7, 9
Overhead Console	RD	Front of Console	17
P18	GY	RT of Steering Column	12
P30	BK	RT Side of HVAC	10
P34	GY	RT of Steering Column	12
P50	NAT	Right Side of HVAC Taped to Harness	10
Park Brake Switch	NAT	Top of Park Brake	N/S
Park/Neutral Positon Switch	BK	Front of Transmission	N/S
Passenger Airbag	YL	Rear of Airbag	11
PDC C1	NAT	Bottom of PDC	2
PDC C2	OR	Bottom of PDC	2
PDC C3	DK/ GN	Bottom of PDC	2
PDC C4	BK	Bottom of PDC	2
PDC C5	LT/GY	Bottom of PDC	2
PDC C6	LT/GN	Bottom of PDC	3
PDC C7	LT/GY	Bottom of PDC	3
PDC C8	BL	Bottom of PDC	3
Power Folding Mirror Switch	BK	At Switch	N/S
Power Mirror Switch	BK	Rear of Switch	11
Power Steering Pressure Switch	BK	RT Side of Engine Compartment	N/S

DESCRIPTION AND OPERATION (Continued)

Component/ Ground	Color	Location	Fig.
Powertrain Control Module C1	BK	LT Fender Side Shield	3
Powertrain Control Module C2	BK	LT Fender Side Shield	3
Radiator Fan No.1	BK	At Motor	N/S
Radiator Fan No.2	BK	At Motor	N/S
Radiator Fan Relay	BK	LT Front Frame Rail	3
Radio C1	GY	Rear of Radio	11
Radio C2	BK	Rear of Radio	11
Radio C3	BK	Rear of Radio	11
Radio Choke	LT/GY	Rear of Radio	N/S
Rear A/C-Heater Unit	LT/GN	RT Quarter Panel	22
Rear Blower Front Control Switch	BK	Rear of Switch	11
Rear Blower Rear Control Switch	BK	At Switch	N/S
Rear Cigar Lighter/Power Outlet	BK	LT Quarter Panel	21
Rear Dome Lamp	BK	At Lamp	N/S
Rear Washer Motor	BK	Bottom of Reservior	4
Rear Window Defogger	BK	On Liftgate	23
Rear Wiper Motor	BK	At Motor	23
Recirculation Door Actuator	NAT	RT Side of HVAC	15
Remote Keyless Entry Module	RD	Top RT of I.P.	11
Right Combination Relay	BK	LT Quarter Panel	N/S
Right Door Arm/Disarm Switch	BK	At Switch	19
Right Door Courtesy Lamp	BK	At Lamp	19

Component/ Ground	Color	Location	Fig.
Right Door Speaker	BK	At Speaker	19
RF3	BK	At Radiator Fan Module	N/S
Right Fog Lamp	GY	At Lamp	4
Right Front Door Ajar Switch	BK	RT B-Pillar	12
Right Front Door Lock Motor	BK	At Motor	19
Right Front Panel Speaker	BK	At Speaker	11
Right Front Park/Turn Signal Lamp	BK	At Lamp	4
Right Front Wheel Speed Sensor	BK	Right Fender Side Shield	4
Right Front Window Motor	RD	At Motor	19
Right Headlamp	BK	At Lamp	4
Right Headlamp Leveling Motor	BK	At Motor	N/S
Right Liftgate Flood Lamp	BK	At Lamp	23
Right Mid Reading Lamp	GY	At Lamp	17
Right Power Door Lock Switch	BK	At Switch	19
Right Power Mirror C1	RD	At Mirror	11
Right Power Mirror C2	BL	At Mirror	11
Right Power Window Switch	BK	At Switch	19
Right Rear Lamp Assembly	BK	At Lamp	22
Right Rear Door Ajar Switch	BK	RT C-Pillar	N/S
Right Rear Pillar Speaker	BK	At Speaker	22
Right Rear Reading Lamp	GY	At Lamp	17

DESCRIPTION AND OPERATION (Continued)

Component/ Ground	Color	Location	Fig.
Right Rear Sliding Door Contact	BK	RT B-Pillar	14
Right Rear Sliding Door Lock Motor	BK	At Motor	N/S
Right Rear Speaker	BK	At Speaker	22
Right Rear Vent Motor	NAT	At Motor	22
Right Rear Wheel Speed Sensor	GY	Center Rear of Floor Pan	16
Right Repeater Lamp	GY	At Lamp	N/S
Right Speed Control Switch		Right Side of Steering Wheel Pad	11
Right Stop/Turn Signal Relay	BK	LT Quarter Panel	N/S
Right Visor/ Vanity Lamp	BK	At Lamp	17
S02	BK	Under Seat	N/S
Seat Belt Switch	BK	RT B-Pillar	N/S
Sentry Key Immobilizer Module	BK	Near Steering Column at Module	11
Stop Lamp Switch	GY	Top of Brake Pedal	12
T05	BK	LT Quarter Panel	N/S
T08	BK	RT Quarter Panel	N/S

Component/ Ground	Color	Location	Fig.
Throttle Position Sensor	NAT	On Throttle Body	5, 6, 7, 8, 9
Trailer Tow Connector	BK	LT Quarter Panel	N/S
Transmission Control Module	BK	RT Fender Side Shield	3
Transmission Range Sensor	BK	Top of Transmission	7. 9
Transmission Control Solenoids	BK	Front of Transmission	7, 9
Turbine Speed Sensor	GY	Front of Transmission	7, 9
Turn Signal/ Hazard Switch	BK	Part of Multifunction Switch	11
Upstream Heated Oxygen Sensor	GY	Rear of Engine	5, 6, 7, 8, 9
Vehicle Speed Control Servo	BK	LT Rear of Engine Compartment	5, 6, 7, 8, 9
Vehicle Speed Sensor	BK	Rear of Transmission	5, 6, 8
Windshield Wiper Switch	BK	Part of Multifunction Switch	11
Wiper Module	BK	LT Side of Engine	2

DESCRIPTION AND OPERATION (Continued)

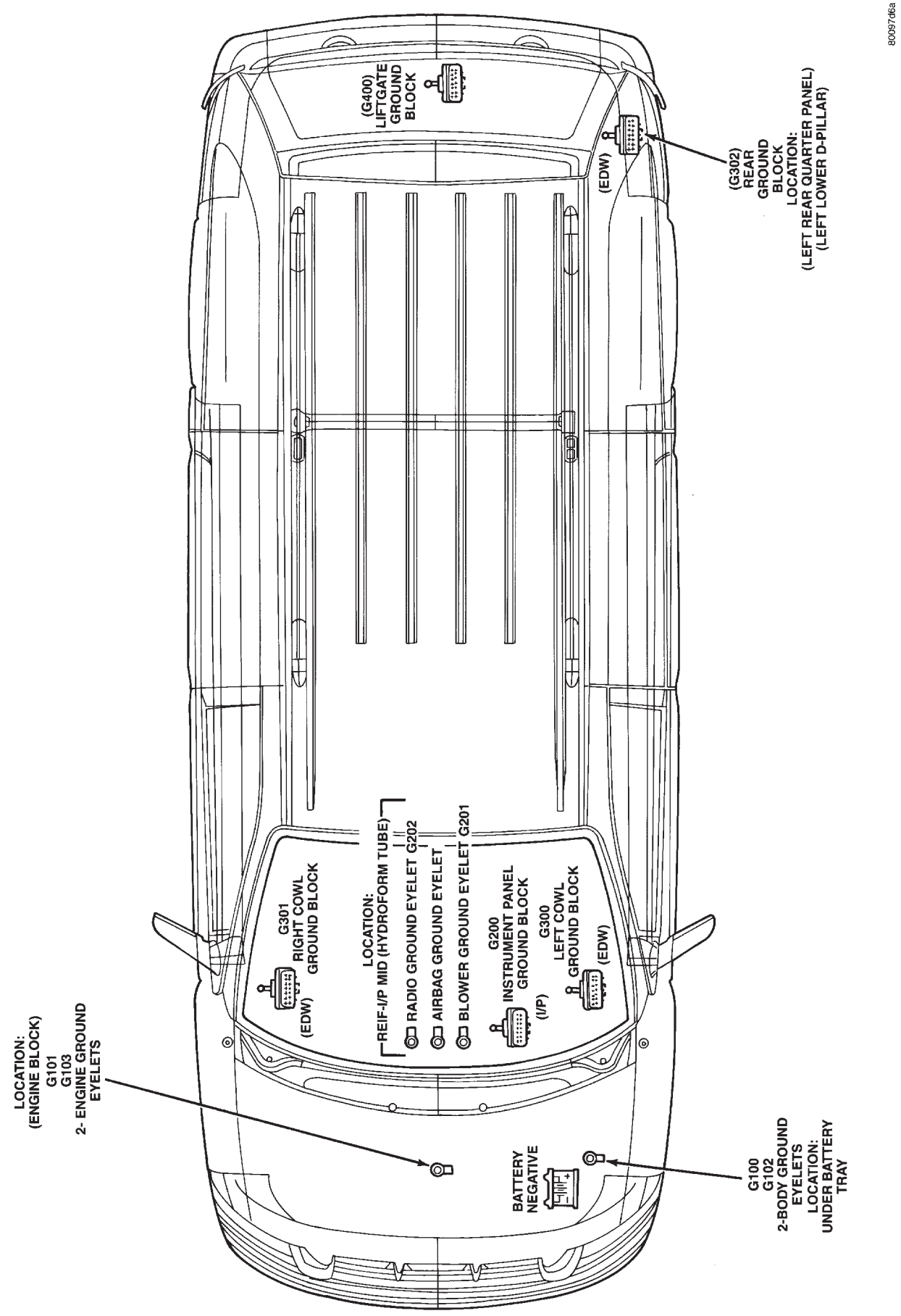

Fig. 1 Ground Locations—RHD

DESCRIPTION AND OPERATION (Continued)

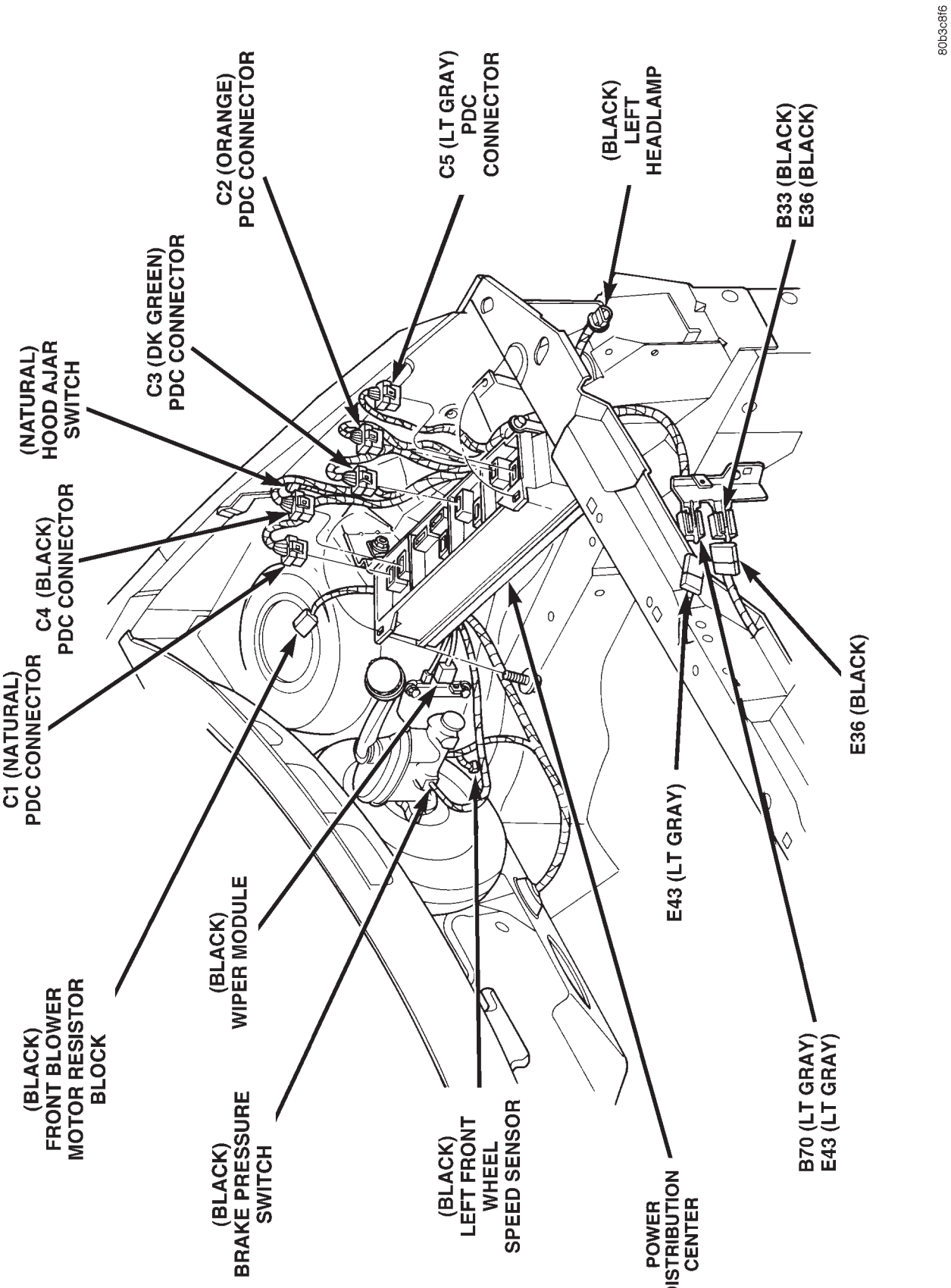

Fig. 2 Engine Compartment Connetions—RHD

DESCRIPTION AND OPERATION (Continued)

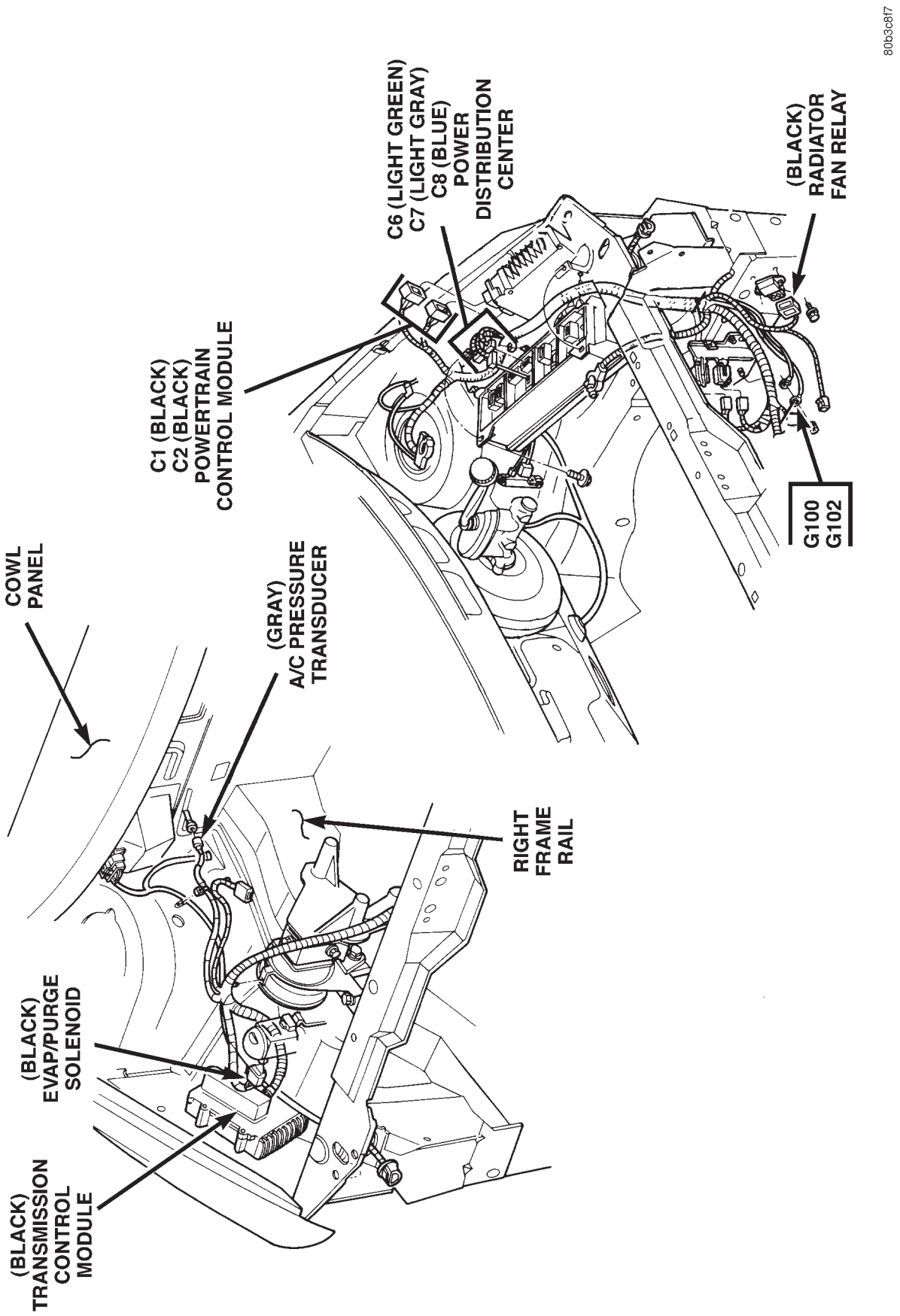

Fig. 3 Engine Compartment Connections—RHD

DESCRIPTION AND OPERATION (Continued)

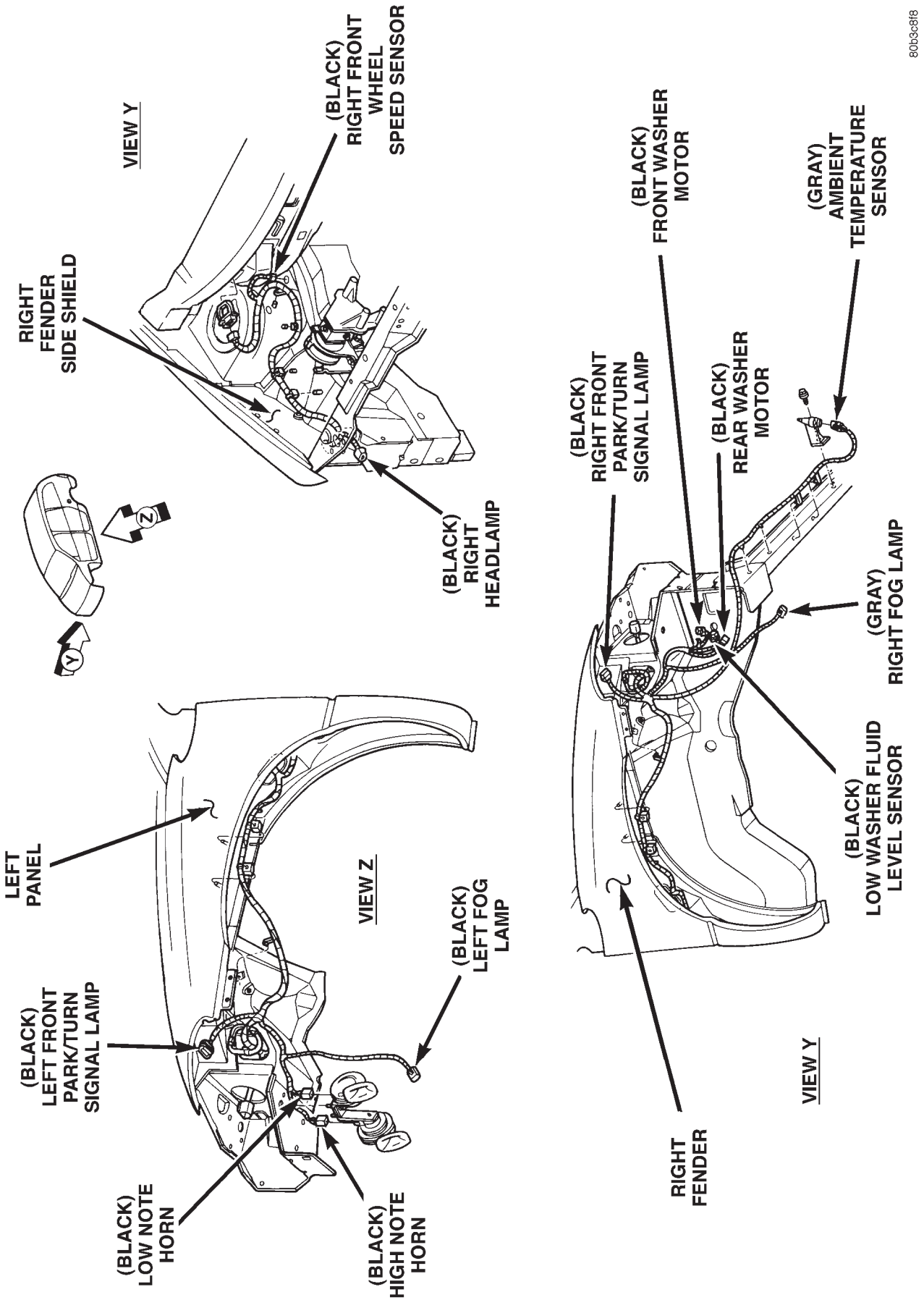

Fig. 4 Engine Compartment Connections—RHD

DESCRIPTION AND OPERATION (Continued)

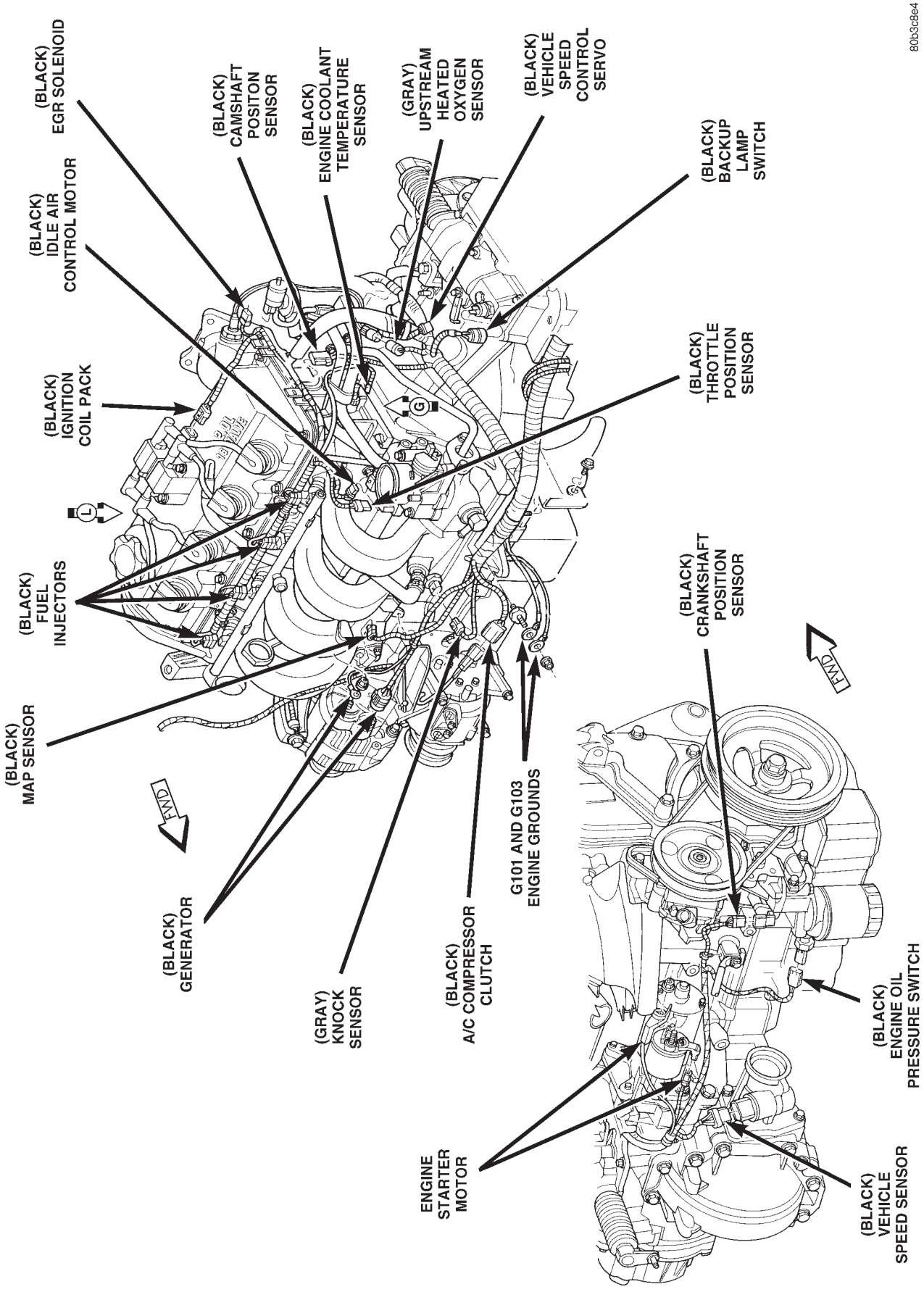

Fig. 5 Engine Connections—2.0L, RHD

DESCRIPTION AND OPERATION (Continued)

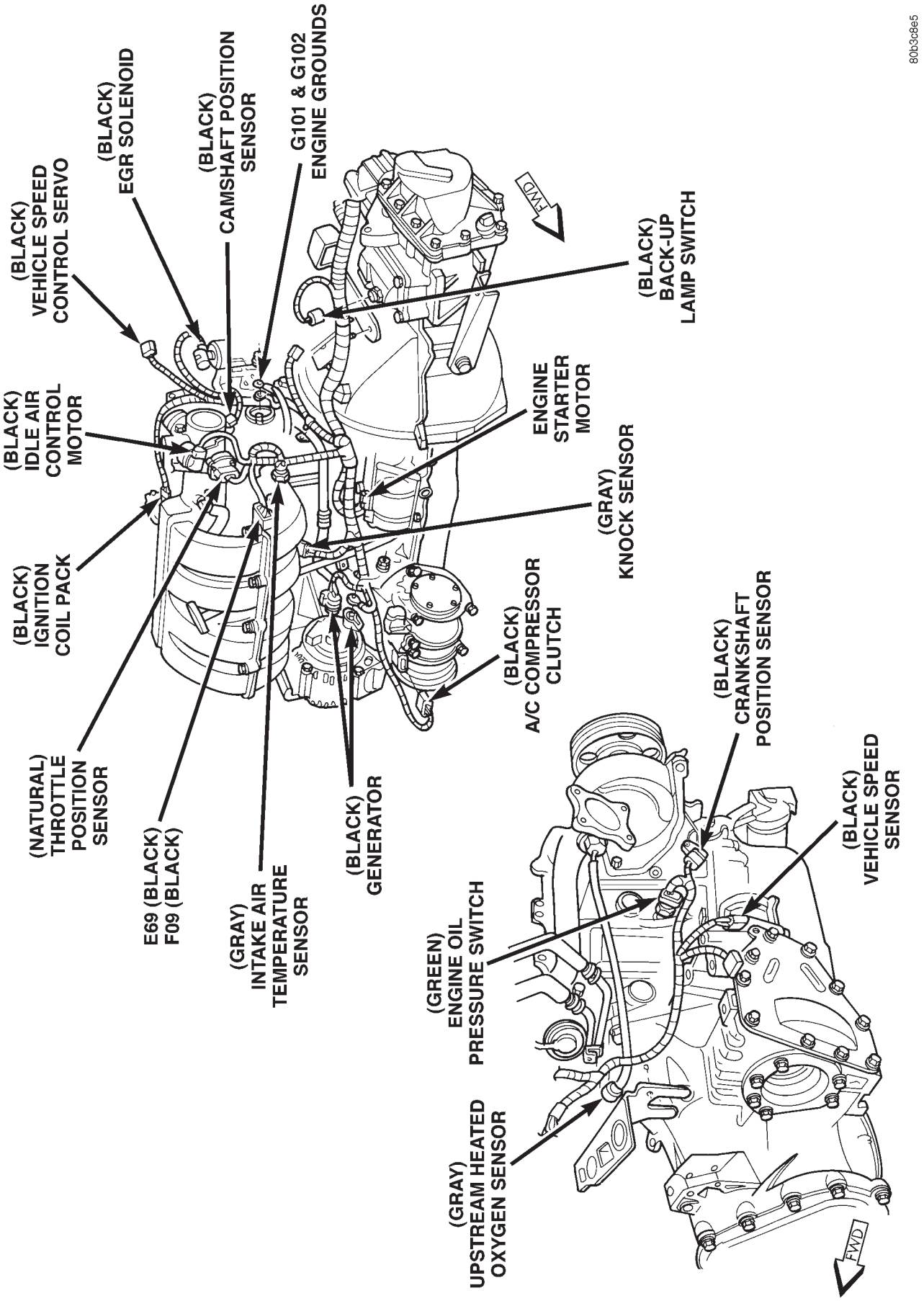

Fig. 6 Engine Connections—2.4L (M/T), RHD

DESCRIPTION AND OPERATION (Continued)

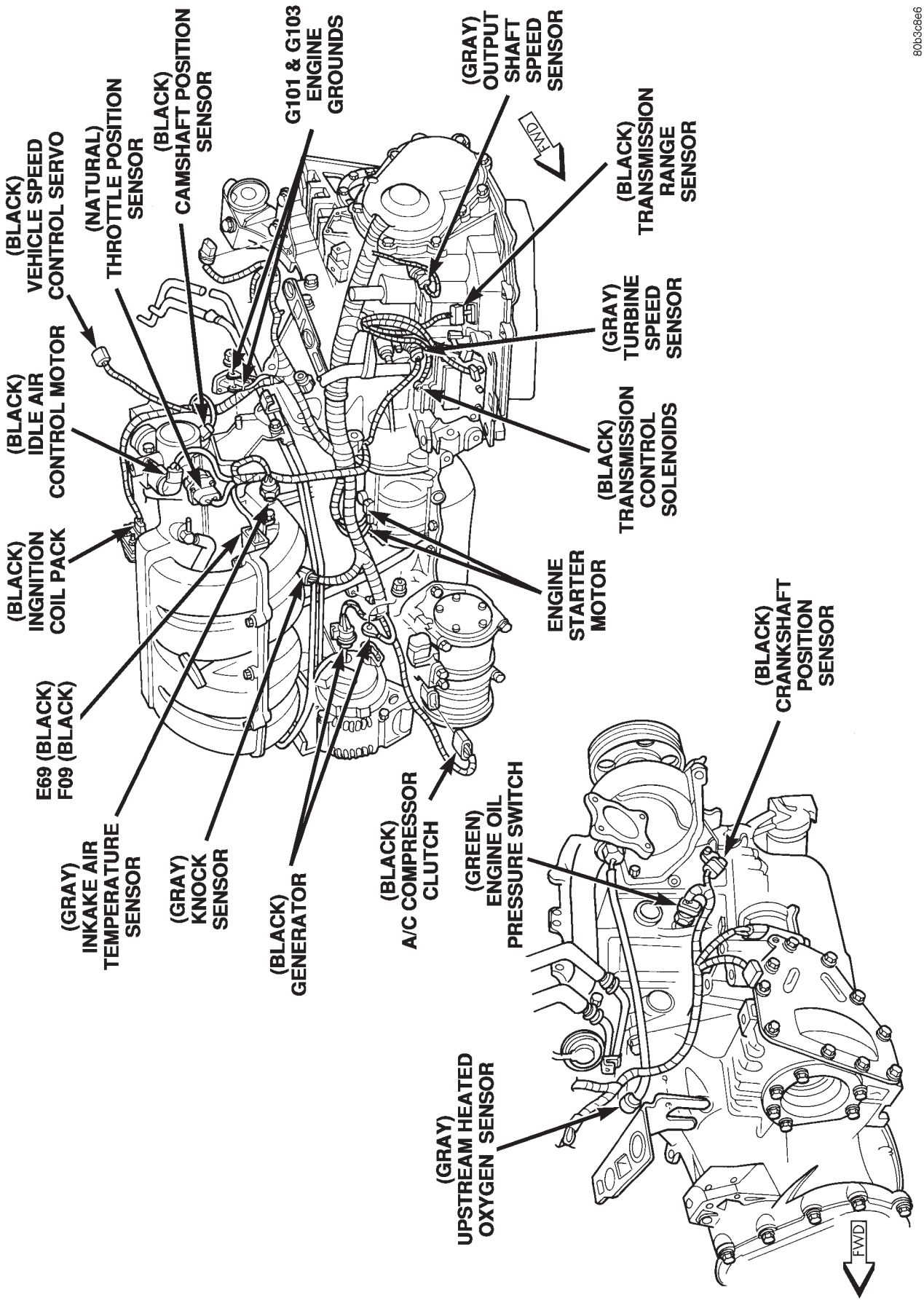

Fig. 7 Engine Connections—2.4L (A/T), RHD

DESCRIPTION AND OPERATION (Continued)

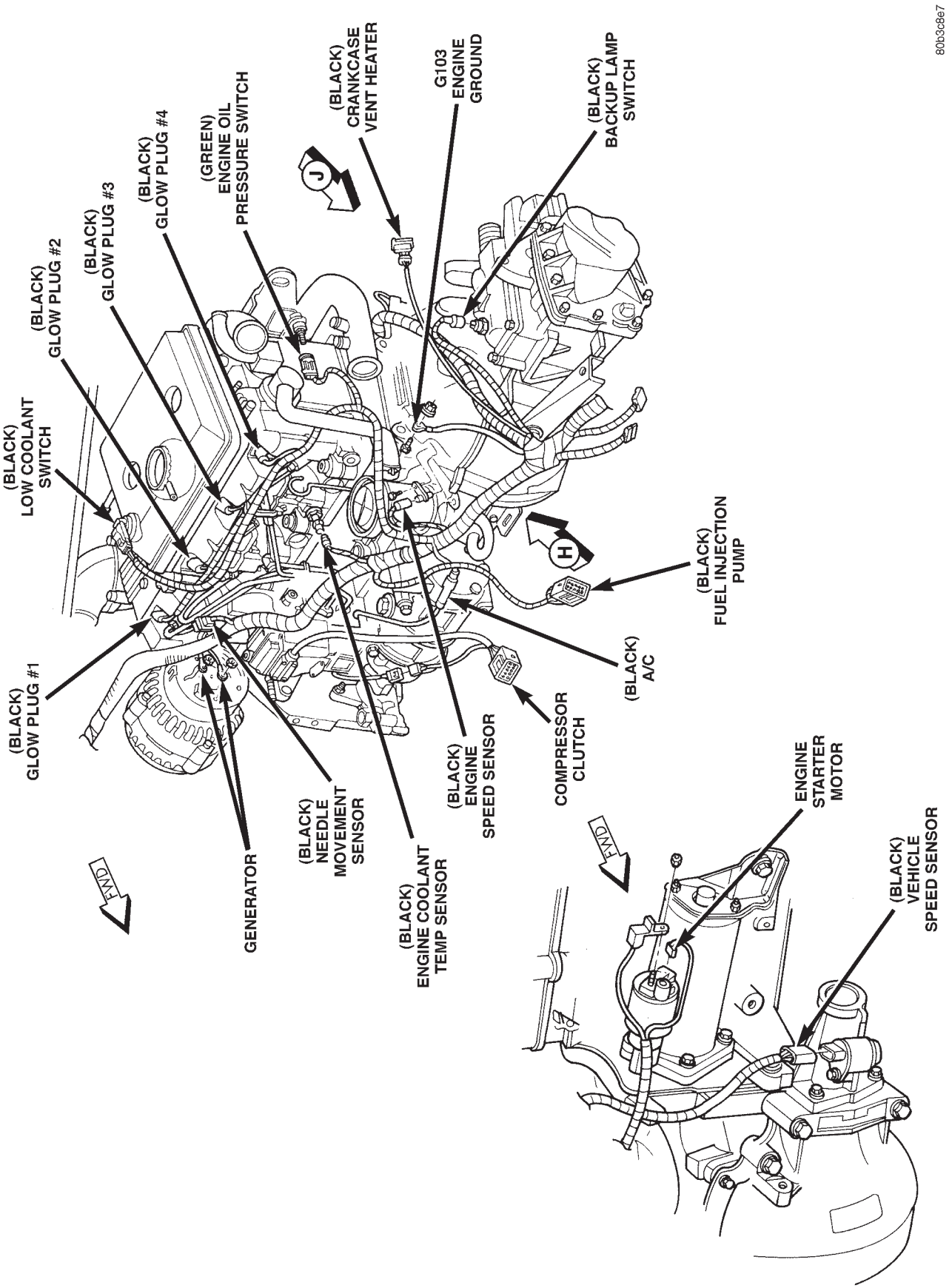

Fig. 8 Engine Connections—2.5L, RHD

DESCRIPTION AND OPERATION (Continued)

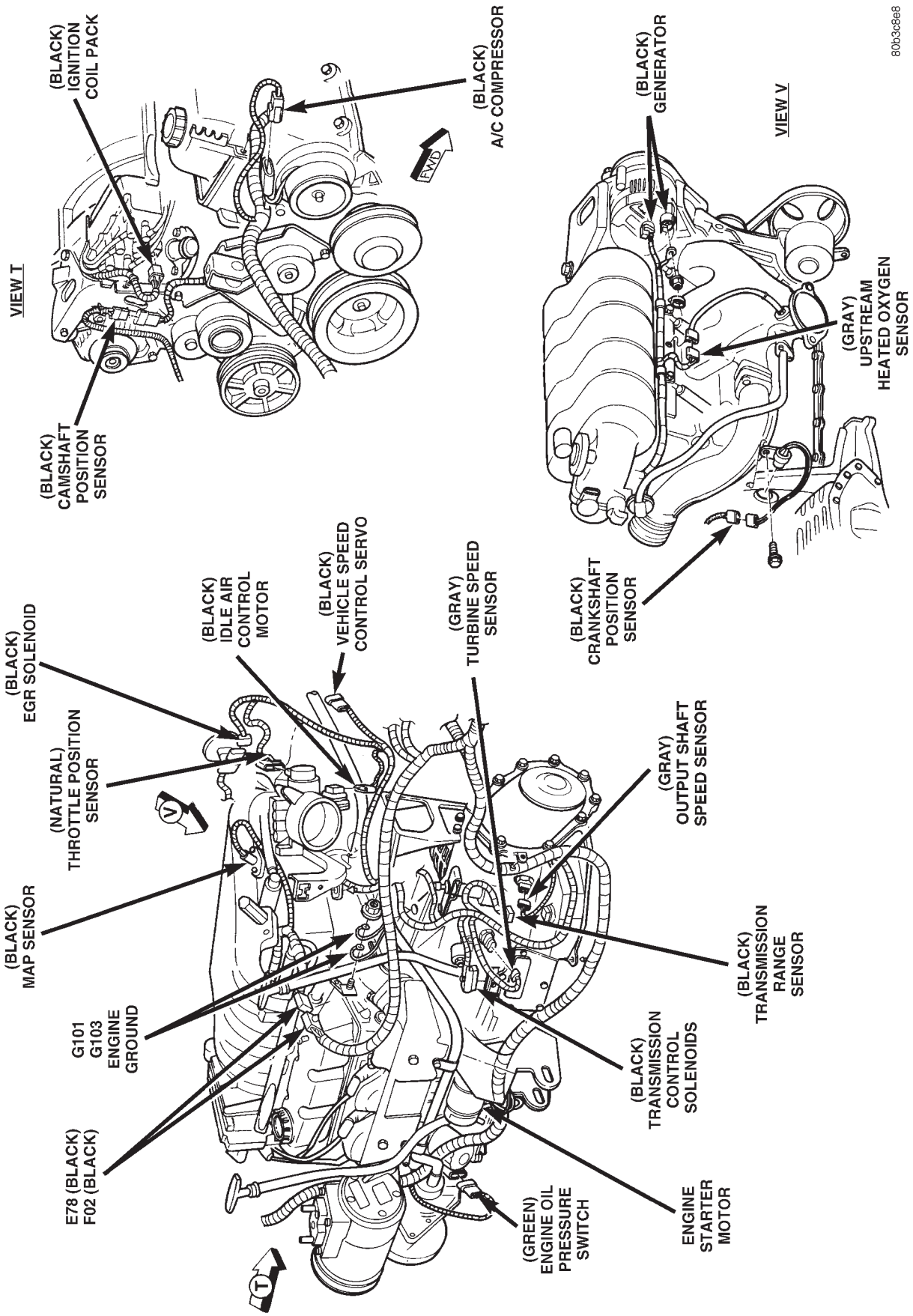

Fig. 9 Engine Connections—3.3L, 3.8L, RHD

DESCRIPTION AND OPERATION (Continued)

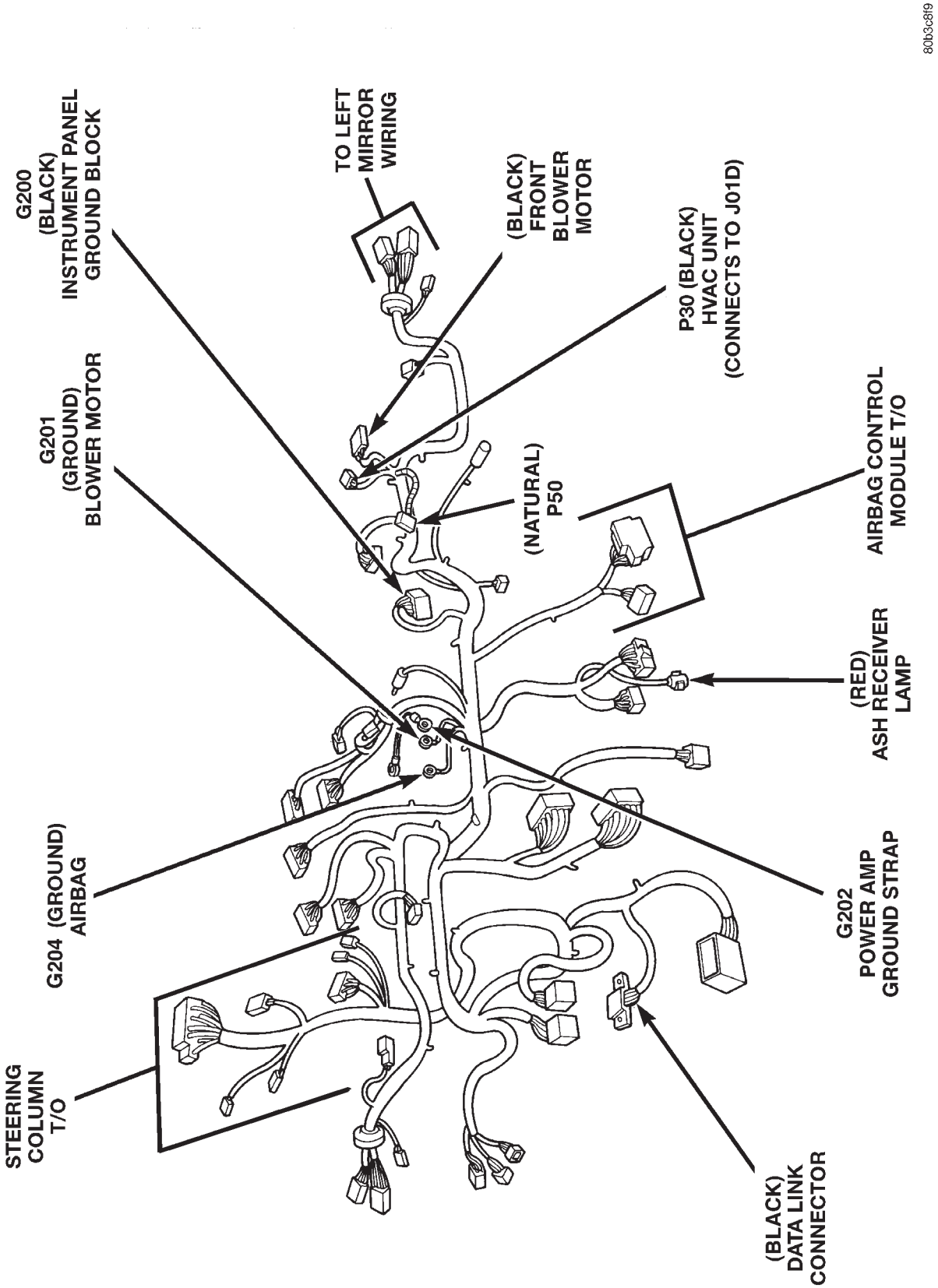

Fig. 10 Instrument Panel Connections—RHD

DESCRIPTION AND OPERATION (Continued)

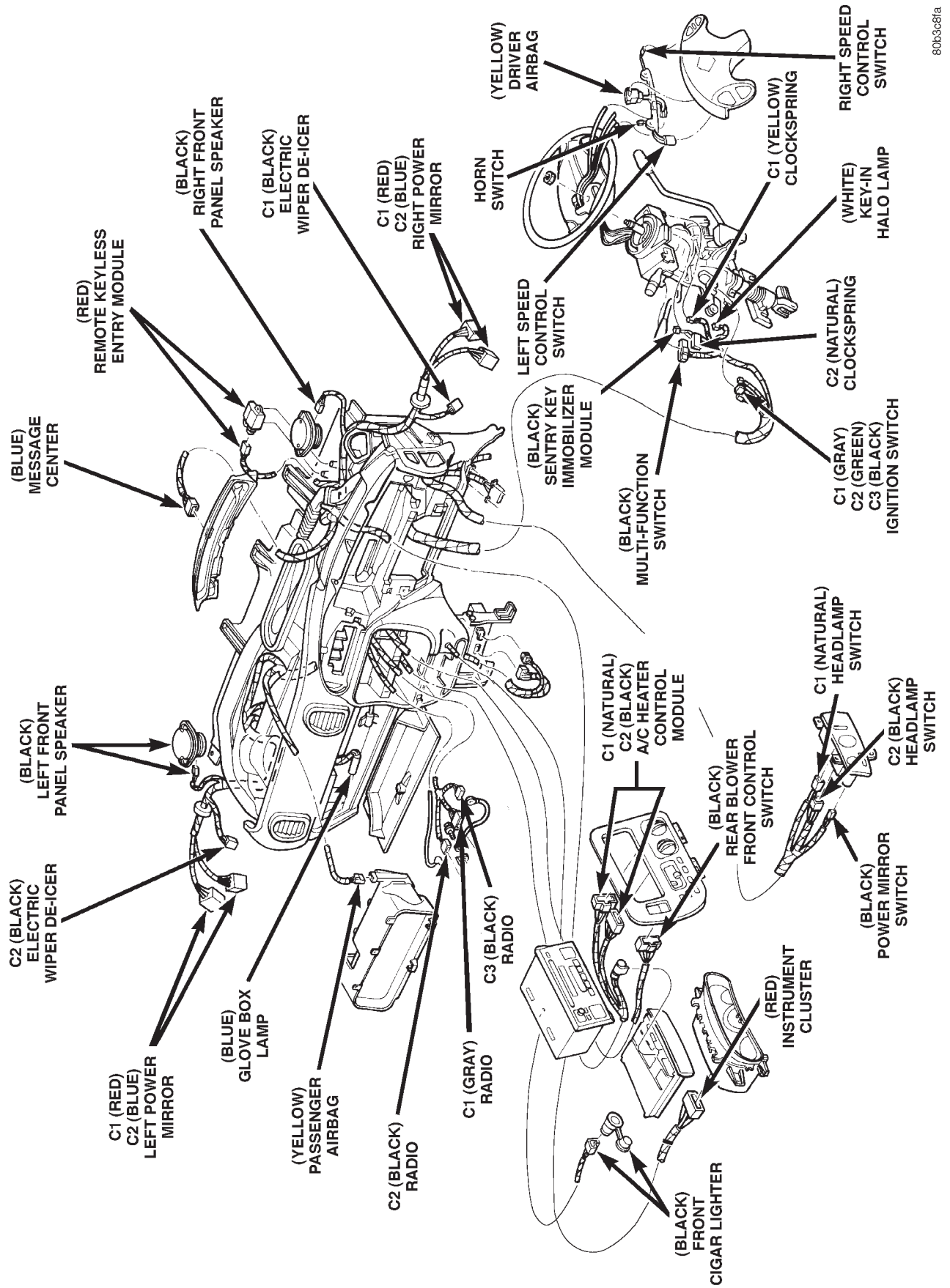

Fig. 11 Instrument Panel Connections—RHD

DESCRIPTION AND OPERATION (Continued)

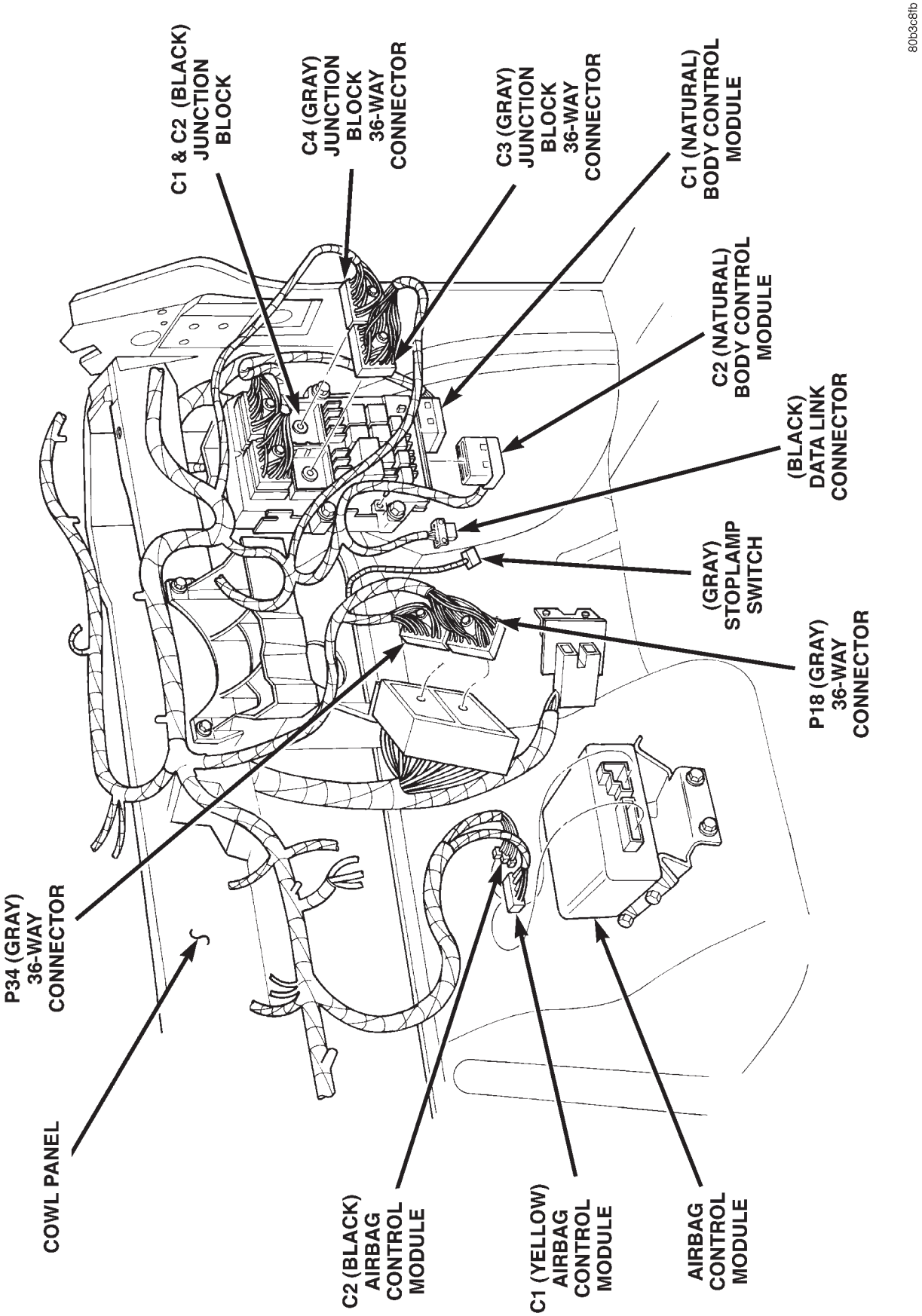

Fig. 12 Instrument Panel Connections—RHD

DESCRIPTION AND OPERATION (Continued)

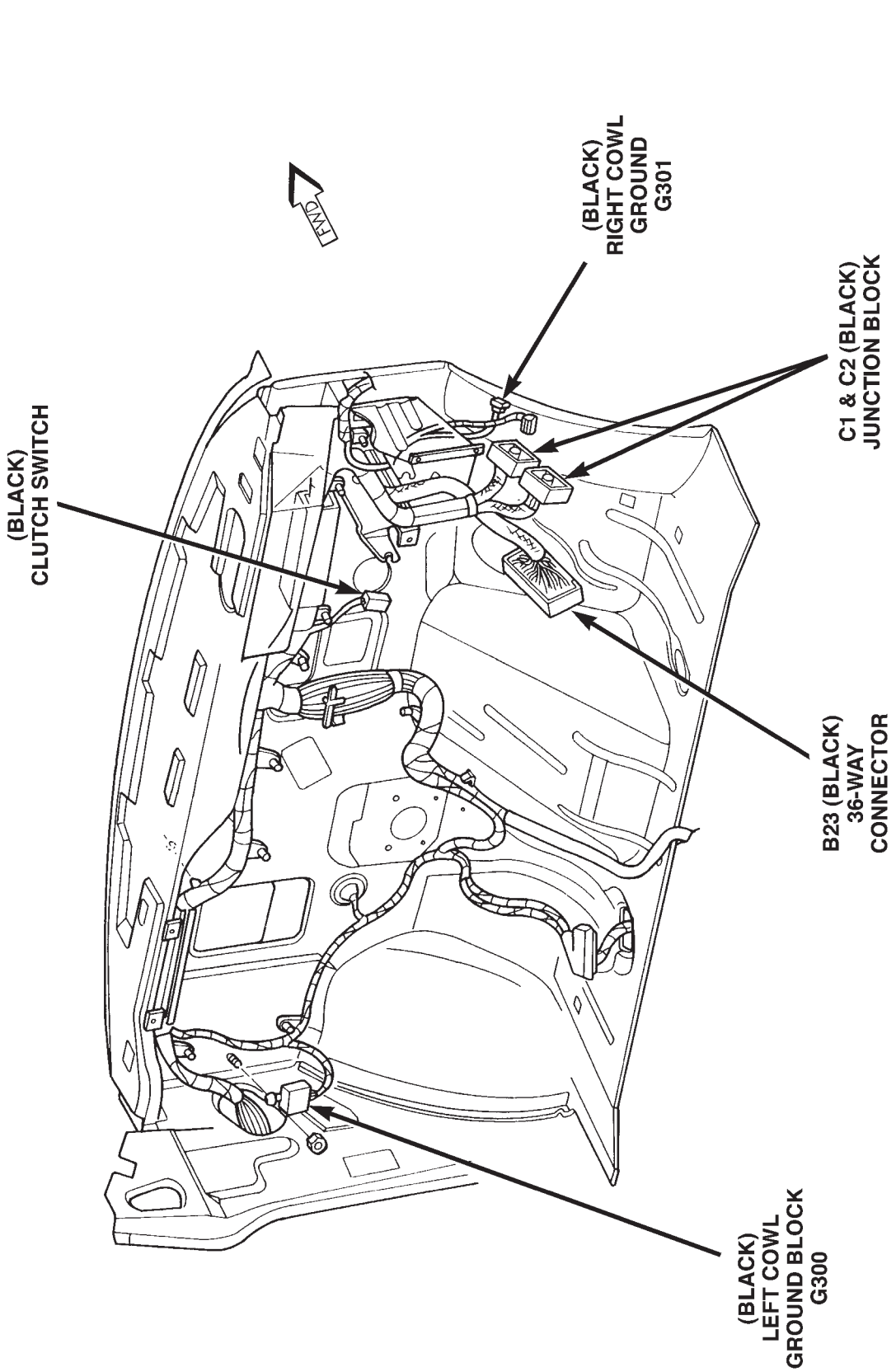

Fig. 13 Cowl Panel Connections—RHD

DESCRIPTION AND OPERATION (Continued)

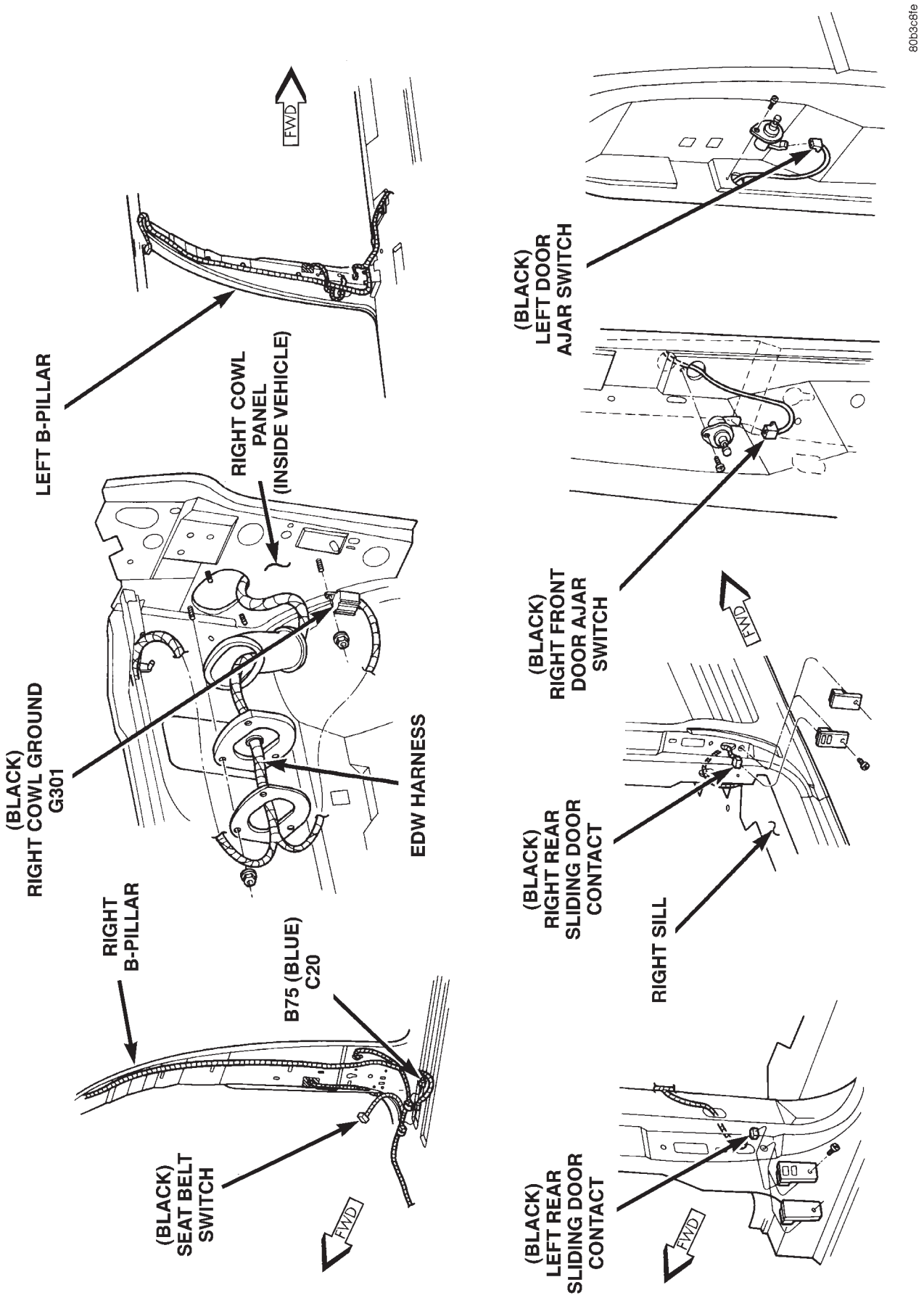

Fig. 14 Body Connections—RHD

DESCRIPTION AND OPERATION (Continued)

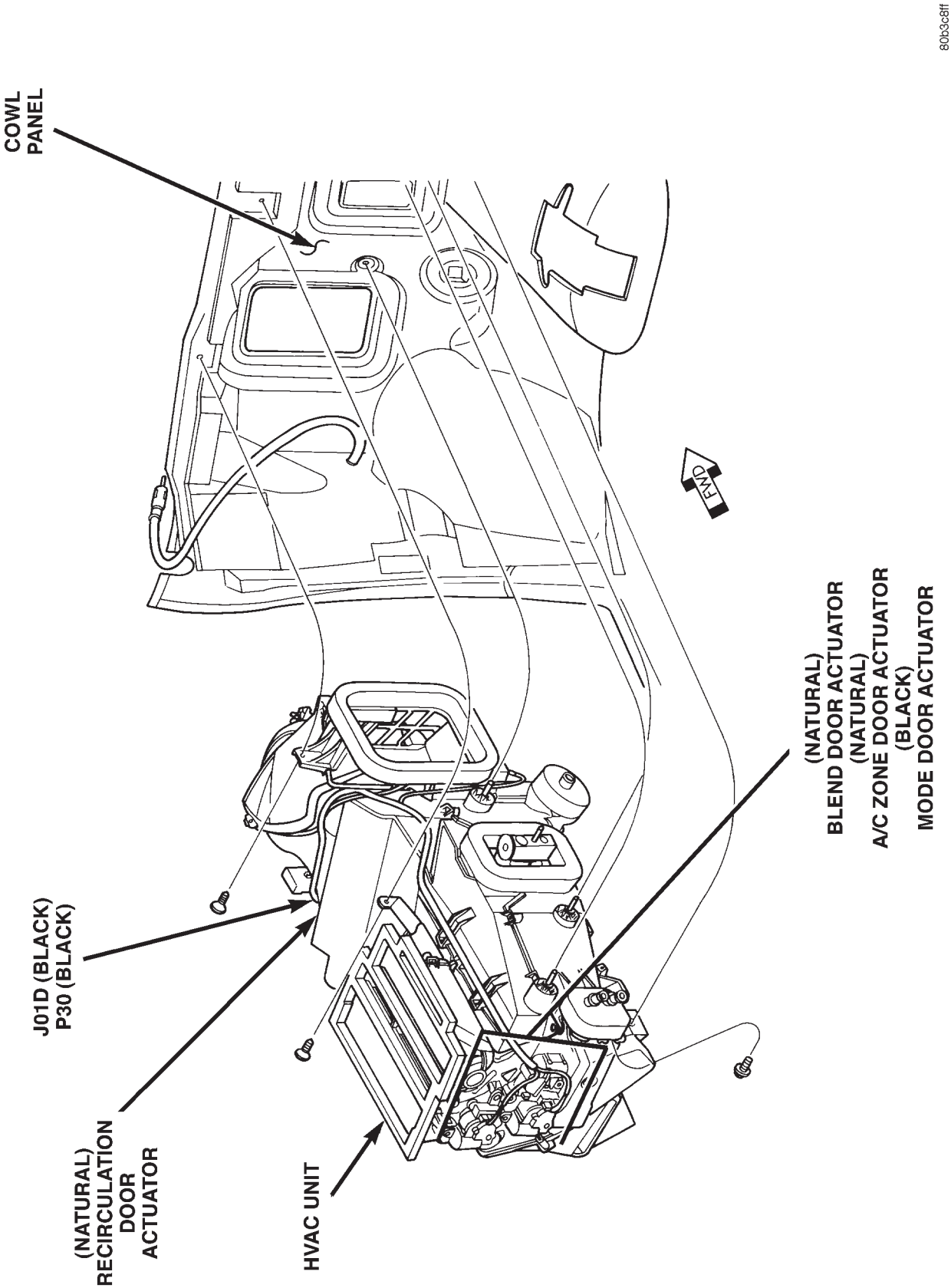

Fig. 15 HVAC Connections—RHD

DESCRIPTION AND OPERATION (Continued)

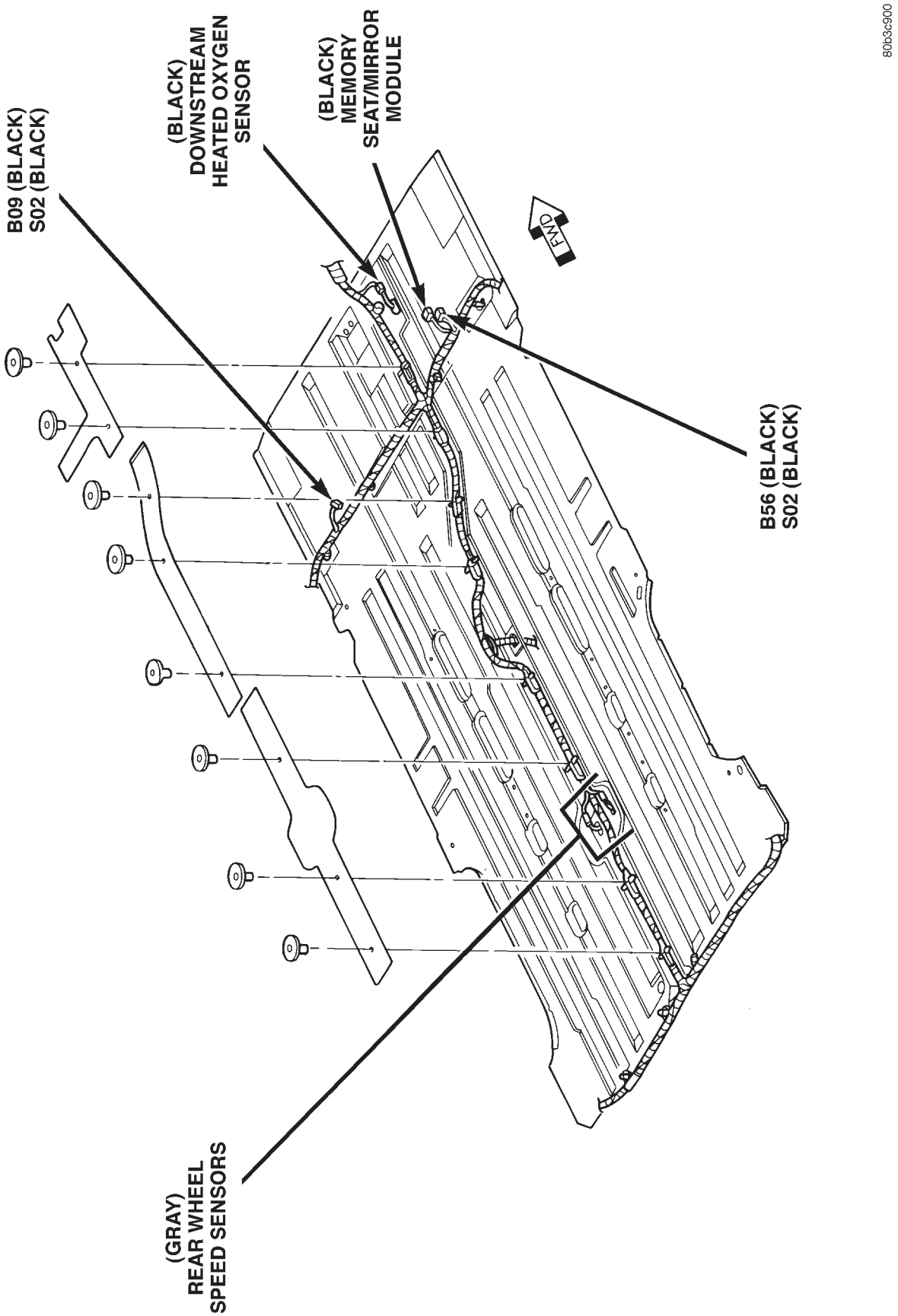

Fig. 16 Body Connections—RHD

DESCRIPTION AND OPERATION (Continued)

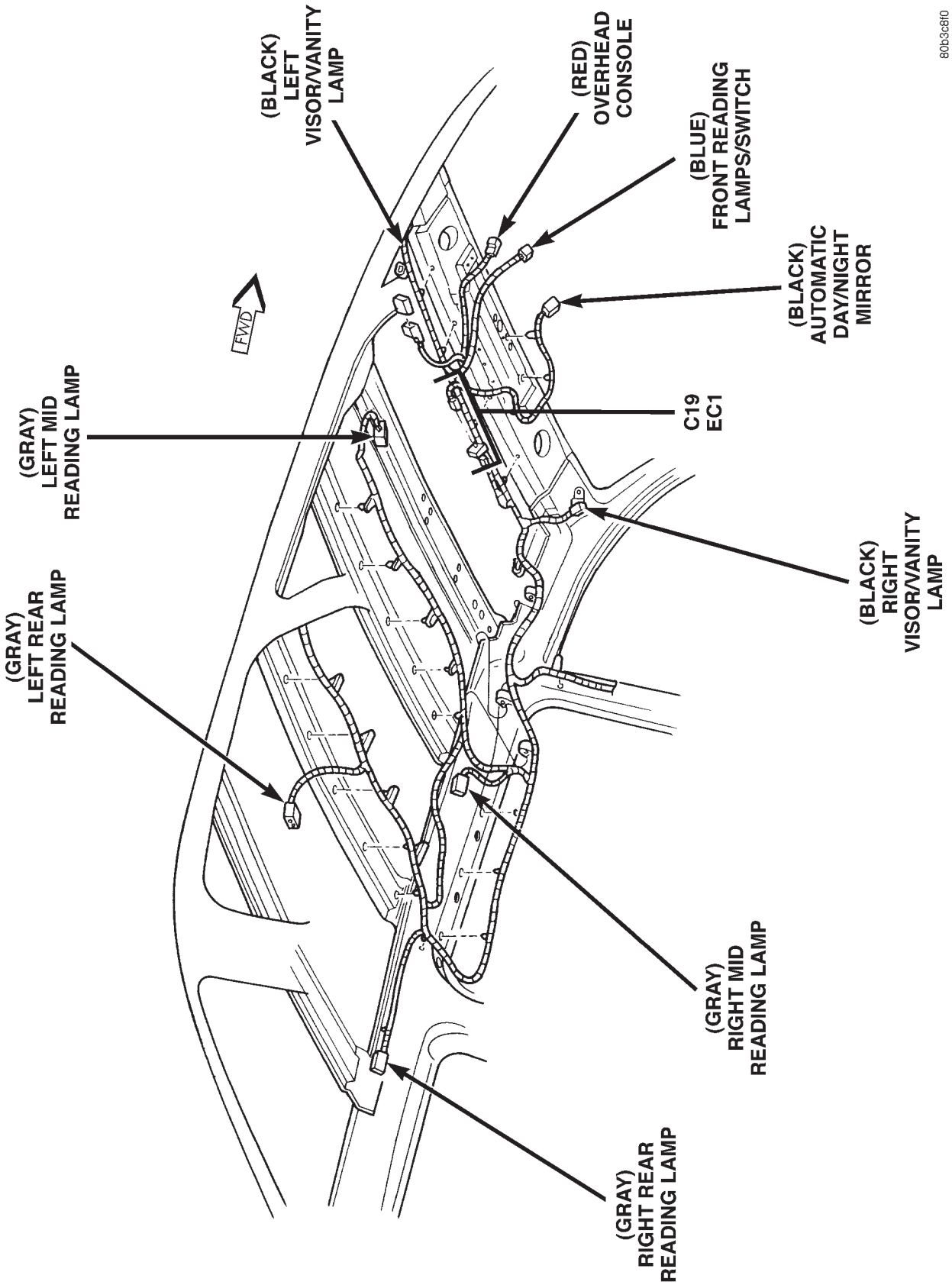

Fig. 17 Roof Panel Connections—RHD

DESCRIPTION AND OPERATION (Continued)

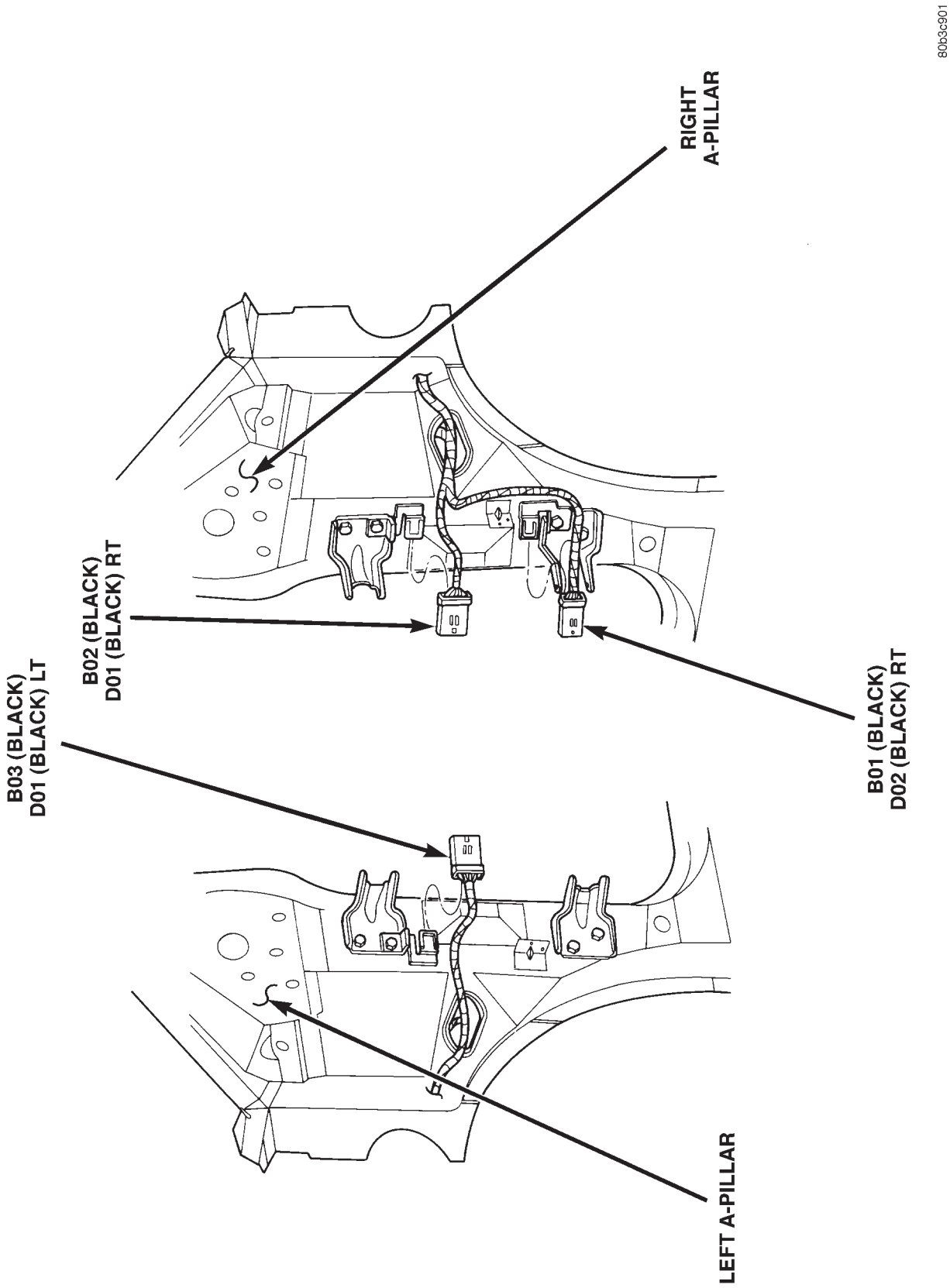

Fig. 18 Body to Door Connections—RHD

DESCRIPTION AND OPERATION (Continued)

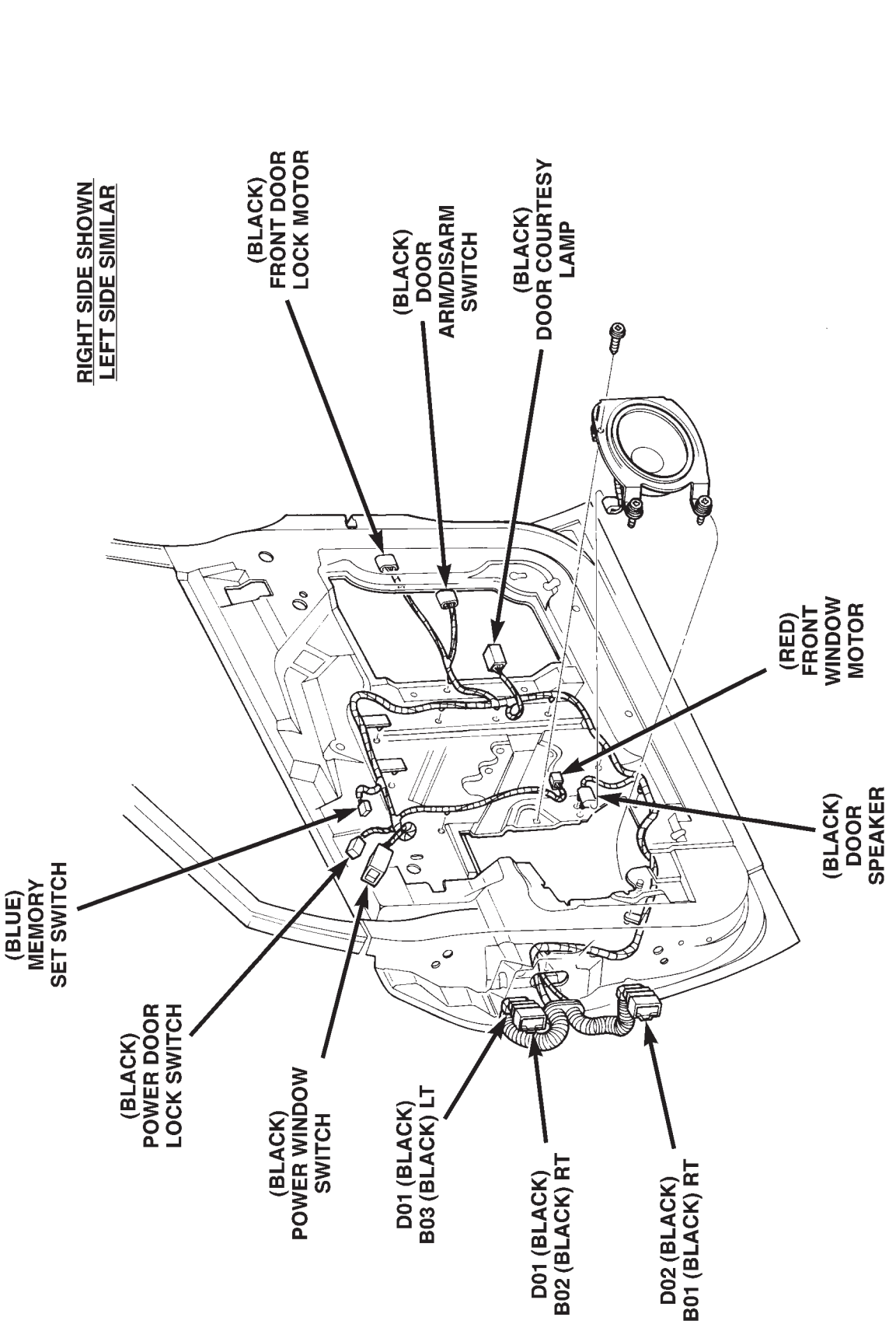

Fig. 19 Door Connections—RHD

DESCRIPTION AND OPERATION (Continued)

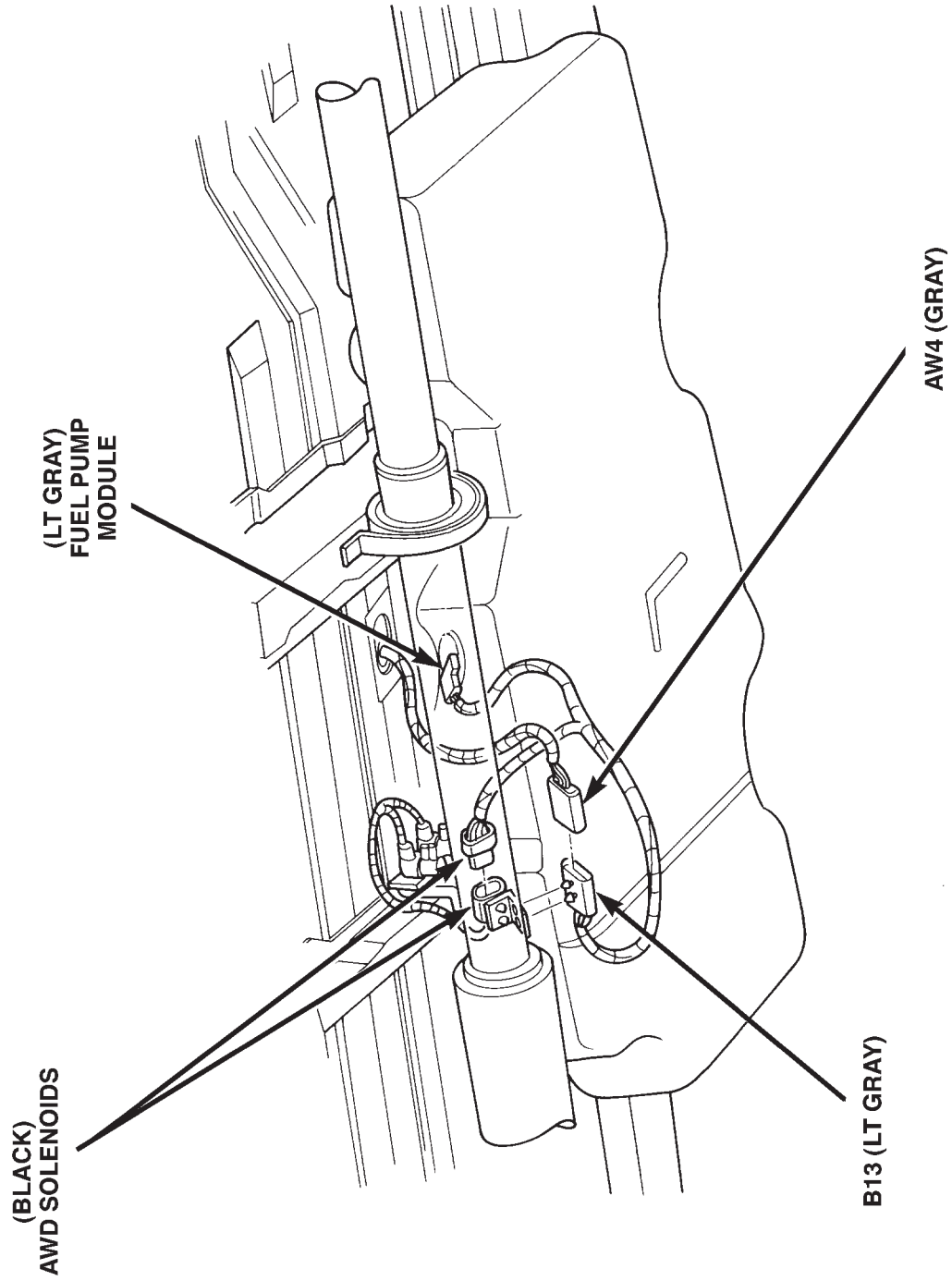

Fig. 20 Underbody Connections—RHD

DESCRIPTION AND OPERATION (Continued)

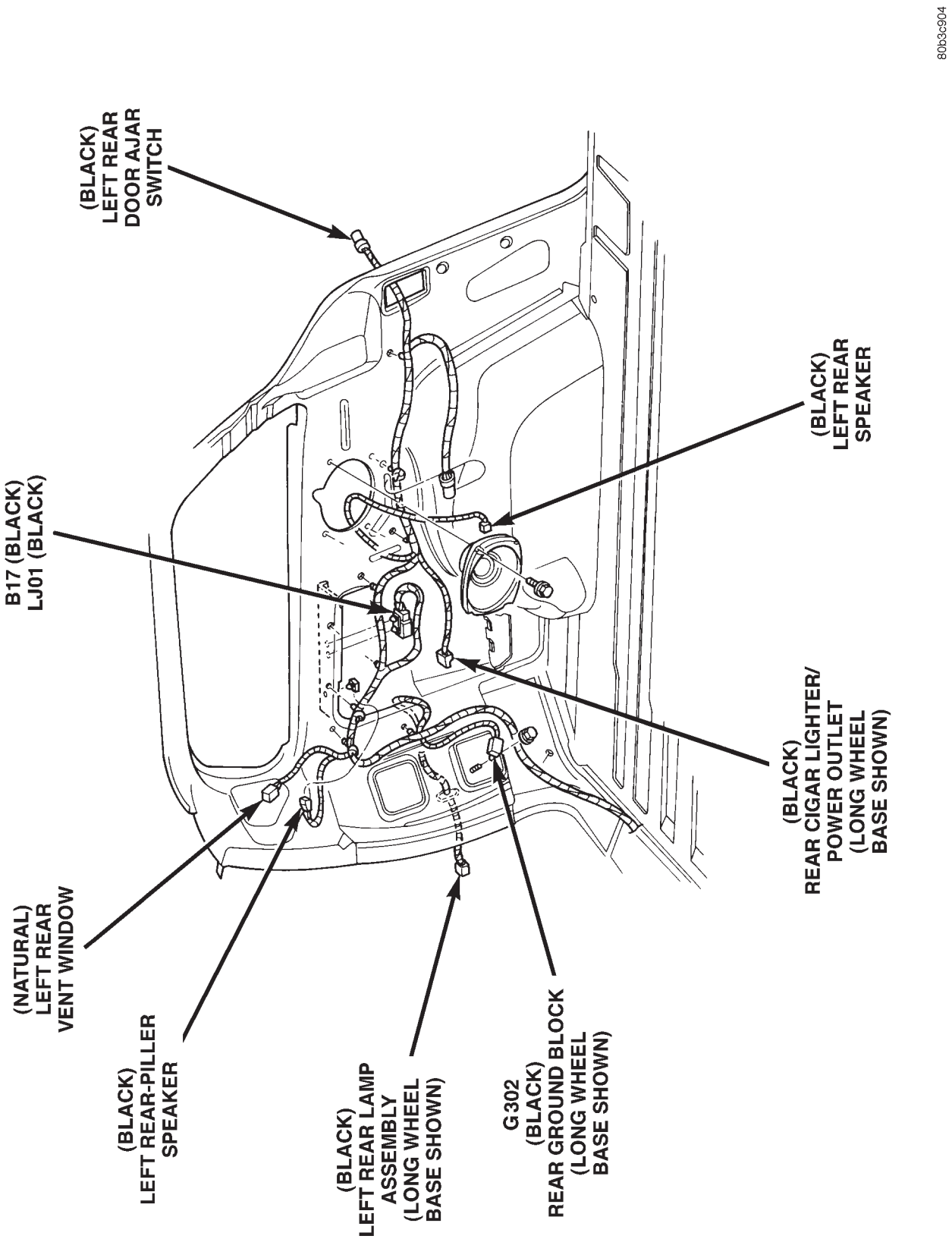

Fig. 21 Left Rear Quarter Connections—RHD

DESCRIPTION AND OPERATION (Continued)

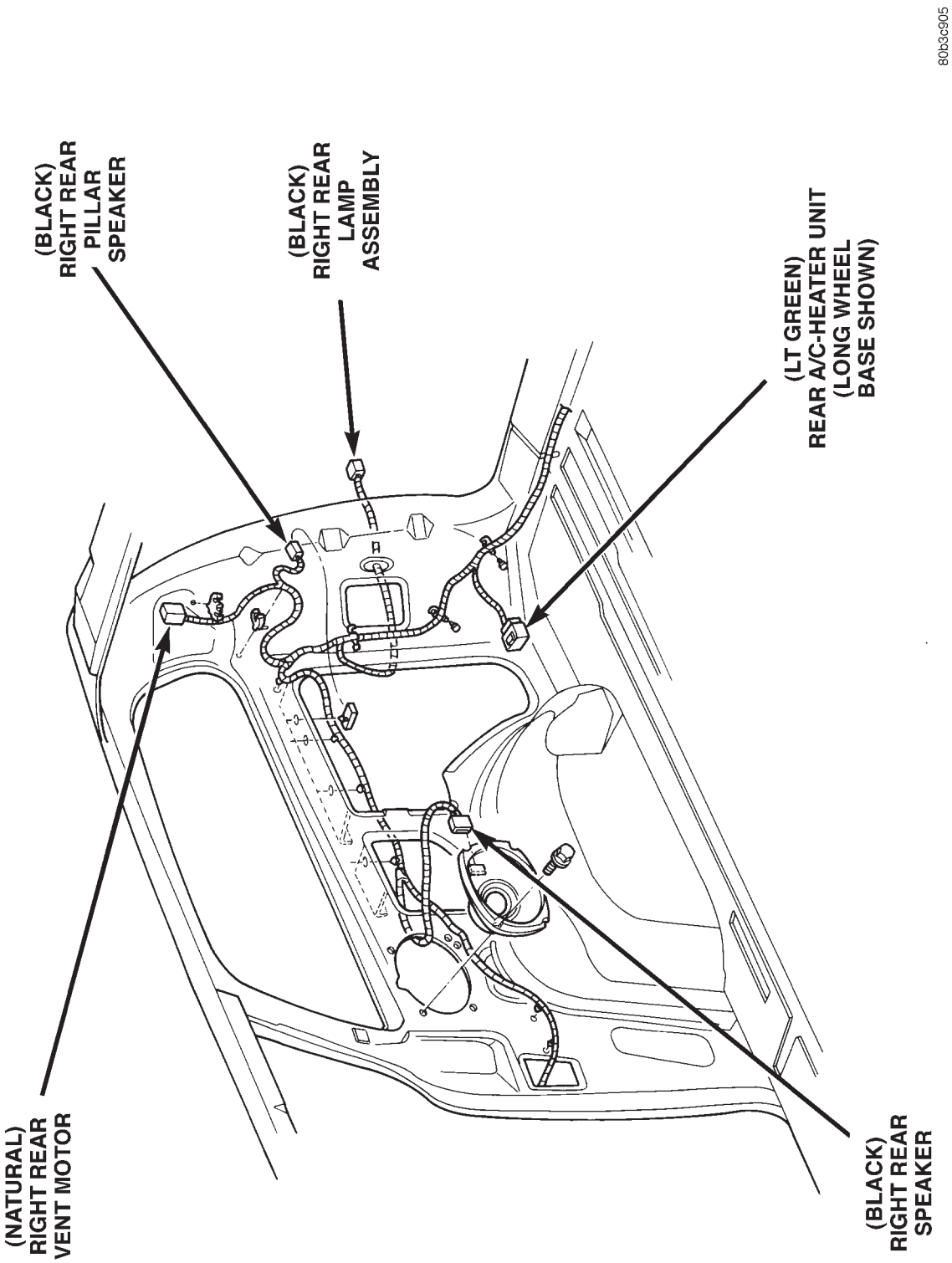

Fig. 22 Right Rear Quarter Connections—RHD

DESCRIPTION AND OPERATION (Continued)

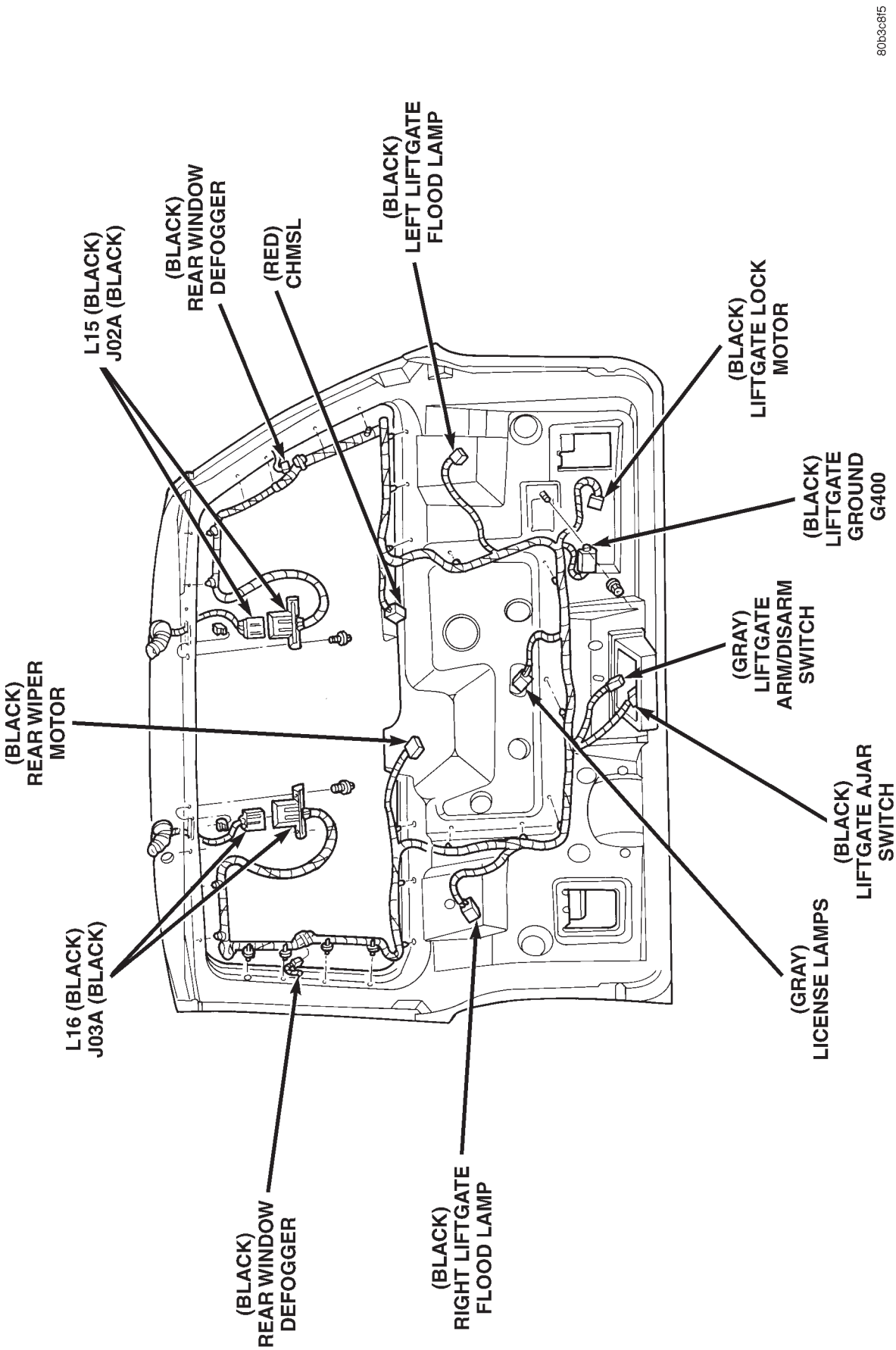

Fig. 23 Liftgate Connections—RHD

8W-95 SPLICE LOCATIONS

INDEX

page

DESCRIPTION AND OPERATION
INTRODUCTION 1
SPLICE LOCATION INDEX 1
SPLICE LOCATIONS (RHD) 15

DESCRIPTION AND OPERATION

INTRODUCTION

This section provides illustrations identifying the general location of the splices in this vehicle. A splice index is provided. Use the wiring diagrams in each section for splice number identification. Refer to the index for the proper splice number.

SPLICE LOCATION INDEX

Splice Number	Location	Fig.
BS01	Near Split for Tail Lamps	12
BS02	Near Fuel Tank T/O	12
BS03	Near Instrument Panel T/O	9
BS05	Near Instrument Panel T/O	9
BS05 (2.5L)	Near MSA Controller T/O	N/S
BS06	Near Instrument Panel T/O	9
BS06 (2.5L)	Near MSA Controller T/O	N/S
BS08	Near Instrument Panel T/O	9
BS16	Near Right Park Lamp T/O	1
BS17	Near Split for Tail Lamps	12
BS19	Near Horn T/O	1
BS30 (2.5L)	Near Generator T/O	5
BS31	Near Left Headlamp Leveling Motor T/O	1
BS31 (2.5L)	In BCM T/O	5
BS32 (2.5L)	In BCM T/O	N/S
BS33 (2.5L)	In BCM T/O	N/S
BS34 (2.5L)	In BCM T/O	N/S
BS40 (2.5L)	In Engine Harness T/O	5
BS41 (2.5L)	In Engine Harness T/O	N/S
CS01	Above Right Rear Door	11
CS02	Above Right Rear Door	11
CS03	Right B-Pillar	11
CS04	Right B-Pillar	11
DS01	Near LT Power WDO T/O	10
ES01	In TCM T/O	7
ES01 (2.5L)	Near Battery Positive Terminal T/O	N/S
ES02 (2.0L)	Near Camshaft Position Sensor T/O	3
ES02 (2.4L)	Near Fuel Rail T/O	4
ES02 (2.5L)	Near Engine Speed Sensor T/O	5
ES02 (3.3L,3.8L)	Near Transmission T/O	6
ES03 (2.0L)	Near Distributor Coil T/O	2
ES03 (2.4L)	Near PDC T/O	4
ES03 (3.3L,3.8L)	Near Body Ground T/O	7
ES05 (2.4L)	Near Knock Sensor T/O	4
ES05 (2.5L)	In Fuel Injection Pump T/O	5
ES05 (3.3L,3.8L)	Near Transmission T/O	6
ES06 (2.5L)	Near Needle Movement Sensor T/O	5
ES06 (3.3L,3.8L)	Near Transmission T/O	N/S
ES07 (2.0L)	Near Engine Ground T/O	2
ES07 (2.5L)	Near Battery Negative Terminal T/O	N/S
ES07 (2.4L)	Near Body Ground T/O	4, 7
ES07 (3.3L,3.8L)	Near Battery Negative Terminal T/O	6
ES08 (3.3L,3.8L)	Near Transmission T/O	6
ES09 (2.0L)	In Battery Positive Terminal T/O	7
ES09 (2.4L)	Near Battery Positive Terminal	4

DESCRIPTION AND OPERATION (Continued)

Splice Number	Location	Fig.
ES09 (2.5L)	In Battery Positive Terminal T/O	N/S
ES09 (3.3L,3.8L)	In Battery Positive Terminal T/O	7
ES10	Near Knock Sensor T/O	6
ES10 (3.3L,3.8L)	Near Transmission T/O	7
ES11 (2.0L)	Near Battery Positive Terminal T/O	7
ES11 (2.4L)	Near Battery Negative Terminal T/O	4
ES11 (2.5L)	In Generator T/O	N/S
ES11 (3.3L,3.8L)	Near Battery Negative Terminal	7
ES12 (2.4L)	Near Throttle Body T/O	4
ES12 (2.5L)	Near Battery Negative Terminal T/O	N/S
ES12 (3.3L,3.8L)	Near Battery Positive Terminal T/O	7
ES13 (2.4L)	Near Generator T/O	4
ES13 (3.3L,3.8L)	Near Battery Negative Terminal T/O	7
ES14 (2.4L)	Near Generator T/O	4,7
ES14 (3.3L,3.8L)	Near Battery Negative Terminal T/O	7
ES17 (2.0L)	Near Camshaft Position Sensor T/O	3
ES17 (2.4L)	Near Engine Ground T/O	4
ES17 (3.3L,3.8L)	Near Battery Negative Terminal T/O	7
ES18 (2.0L)	Near Camshaft Position Sensor T/O	3
ES18 (2.4L)	Near Engine Ground T/O	4
ES18 (3.3L,3.8L)	Near Engine Ground T/O	7
ES21 (2.0L)	Near Body Ground T/O	N/S
ES21 (2.4L)	Near Engine Ground T/O	4
ES21 (3.3L,3.8L)	Near A/C Clutch T/O	6
ES23 (2.0L)	Near Radiator Fan T/O	N/S
ES23 (2.4L)	Near Radiator Fan T/O	4
ES23 (3.3L,3.8L)	Near Engine ground T/O	7
ES24 (2.4L)	Near Transmission T/O	4
ES24 (3.3L,3.8L)	Near Transmission T/O	7
ES26 (2.5L)	In Battery Positive Terminal T/O	N/S
ES28 (2.5L)	In Battery Positive Terminal T/O	N/S
ES29 (2.5L)	Near Glow Plug Relay T/O	N/S
ES30 (2.5L)	Near Fuel Heater T/O	5
ES31 (2.5L)	Near Fuel Heater T/O	5
ES37 (2.5L)	Near Oil Pressure Switch T/O	5
ES40 (2.5L)	Near Fuel Injection Pump T/O	5
ES99 (2.0L)	Near Knock Sensor T/O	2
FS01 (2.4L)	Near ECT Sensor T/O	N/S
FS01 (3.3L,3.8L)	Near Injector #5 T/O	N/S
FS02 (2.4L)	Near Inj #2 T/O	N/S
FS02 (3.3L,3.8L)	Between Inj's 4 and 6	N/S
FS03 (2.4L)	Between Inj #2 and #3	N/S
PS01	Near Steering Column T/O	8
PS02	Near Steering Column T/O	8
RFS01	Near Radiator Fan #2	N/S
RFS02	Near Radiator Fan #1	N/S

DESCRIPTION AND OPERATION (Continued)

80b3c879

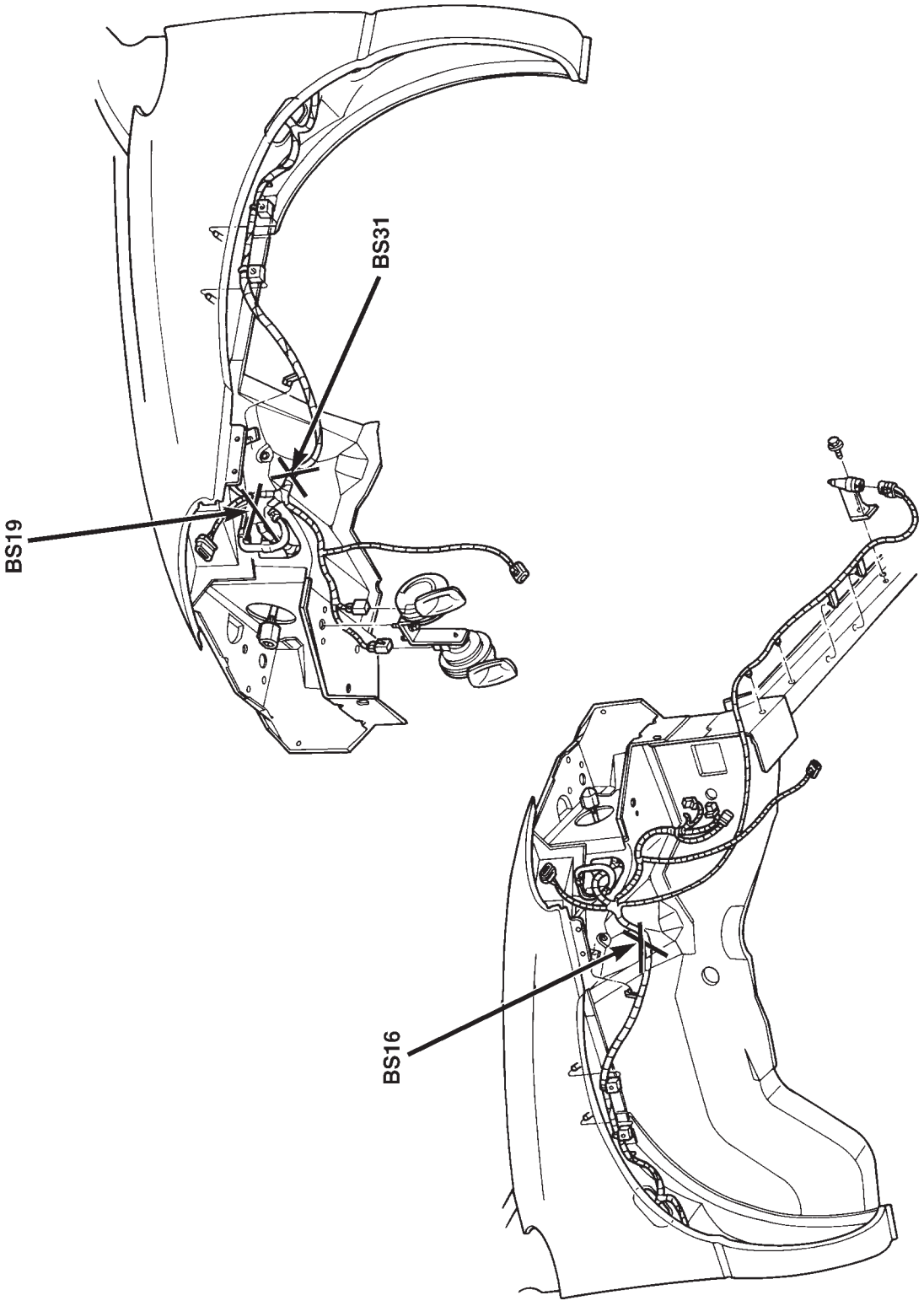

Fig. 1 Front End Splices—LHD

DESCRIPTION AND OPERATION (Continued)

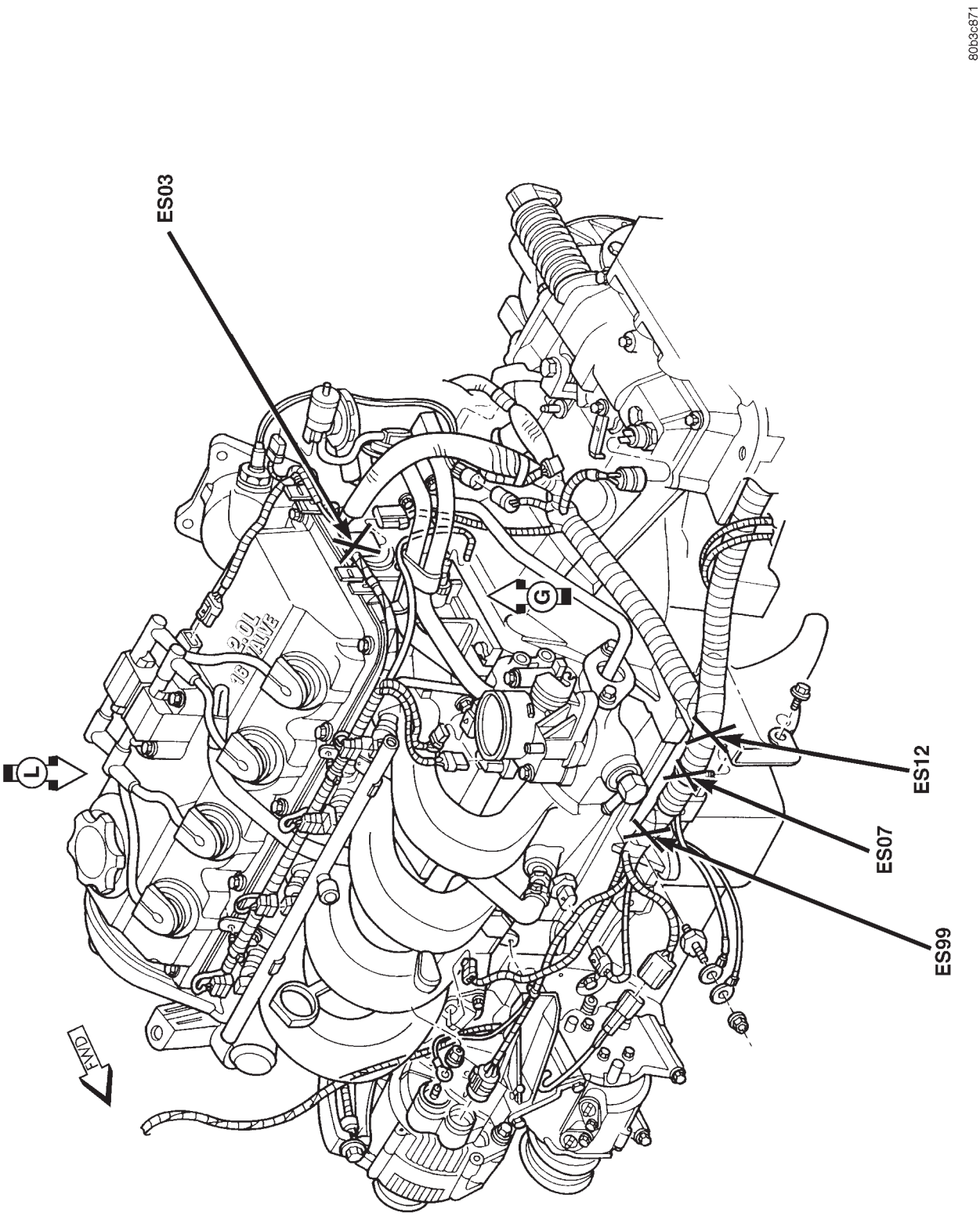

Fig. 2 Engine Splices—2.0L, LHD

DESCRIPTION AND OPERATION (Continued)

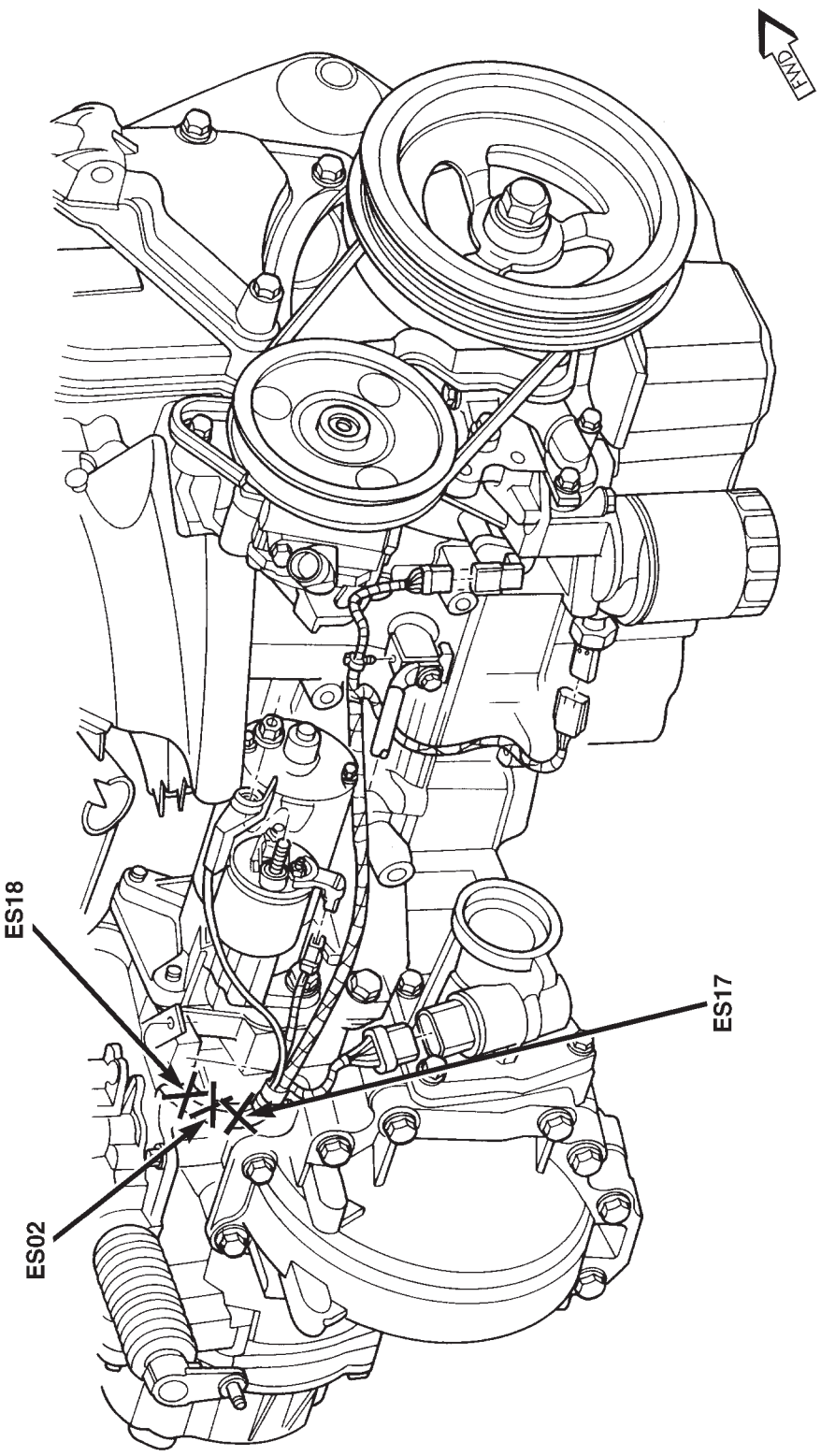

Fig. 3 Engine Splices—2.0L, LHD

DESCRIPTION AND OPERATION (Continued)

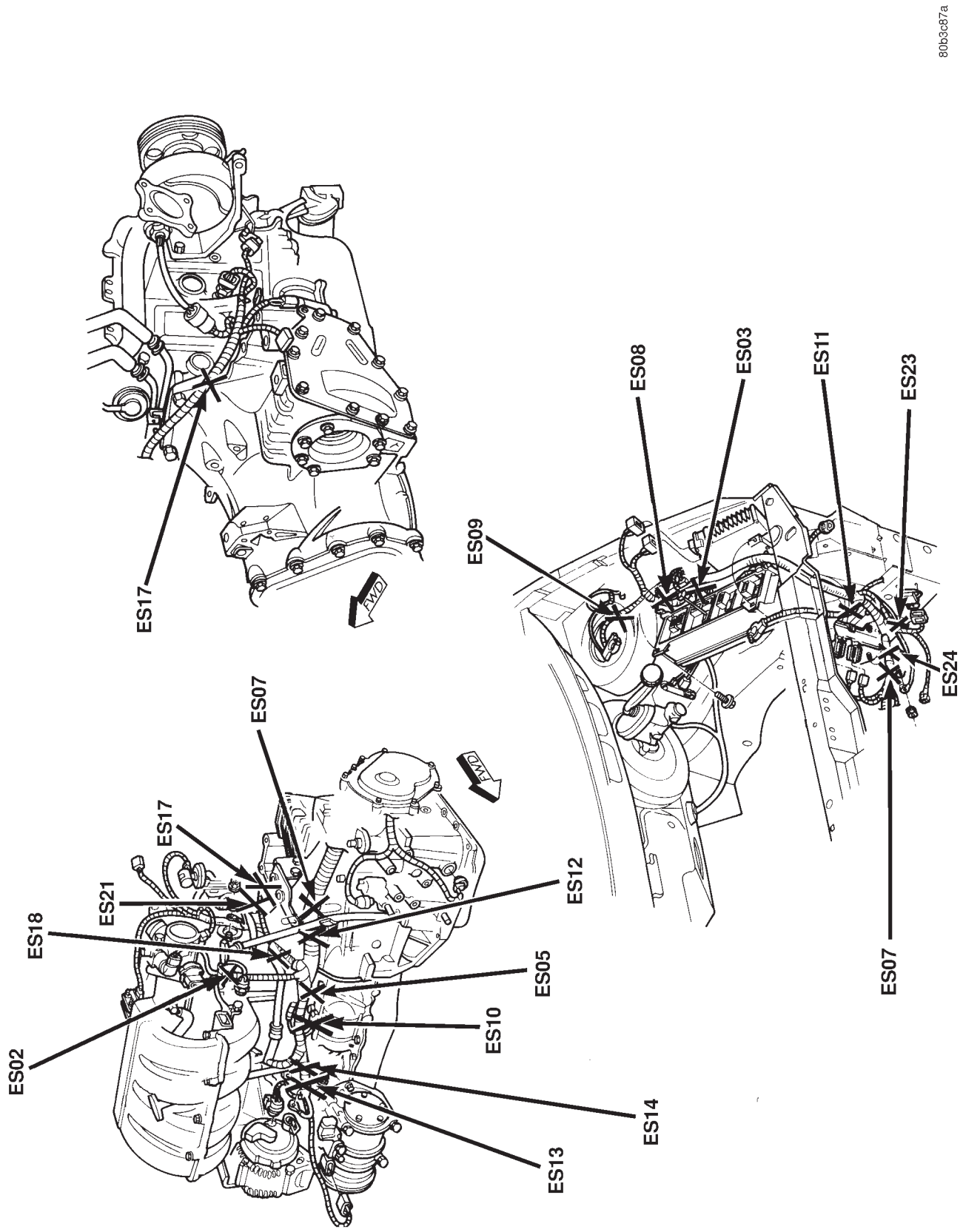

Fig. 4 Engine Splices—2.4L, LHD

DESCRIPTION AND OPERATION (Continued)

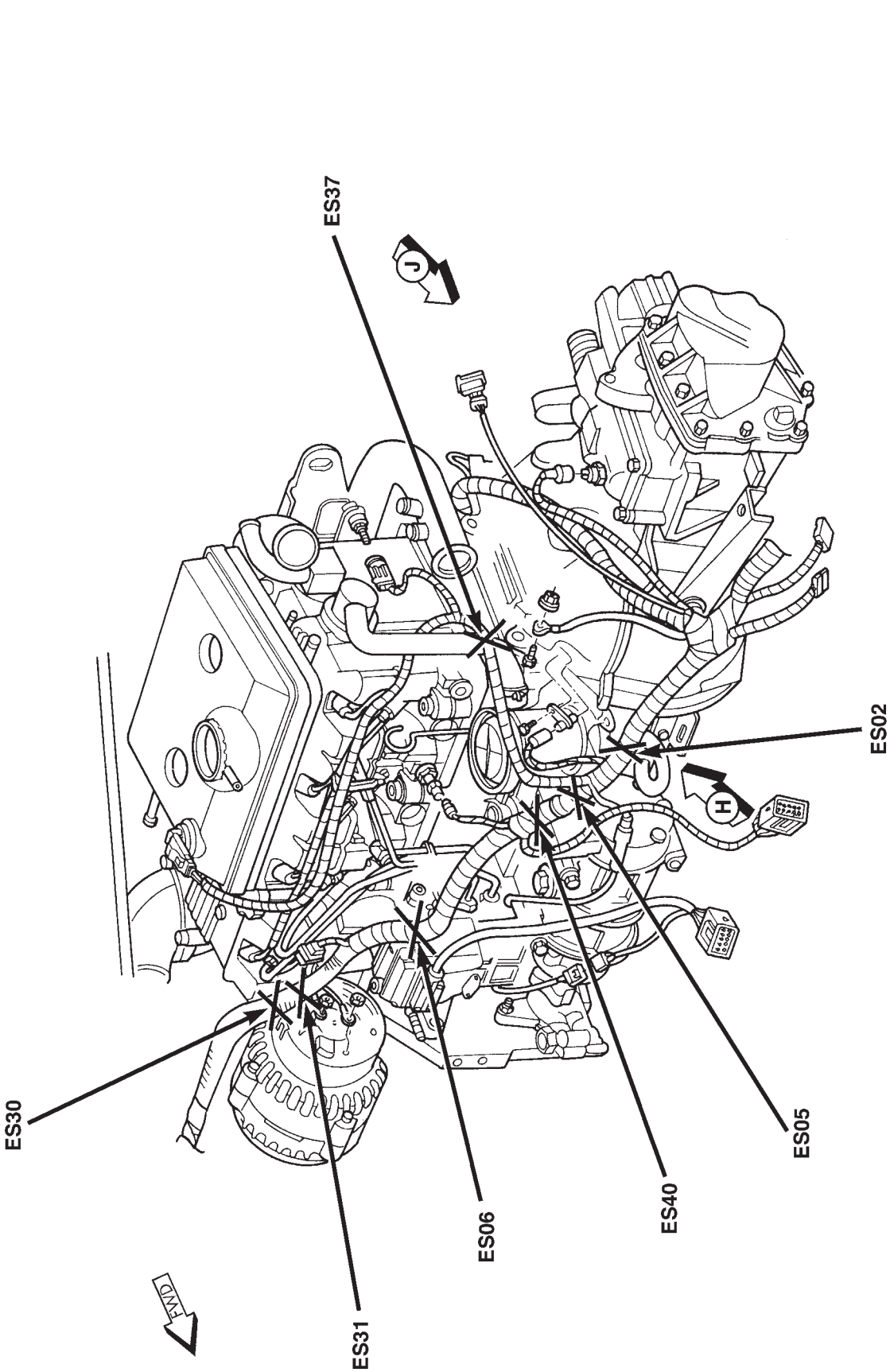

Fig. 5 Engine Splices—2.5L, LHD

DESCRIPTION AND OPERATION (Continued)

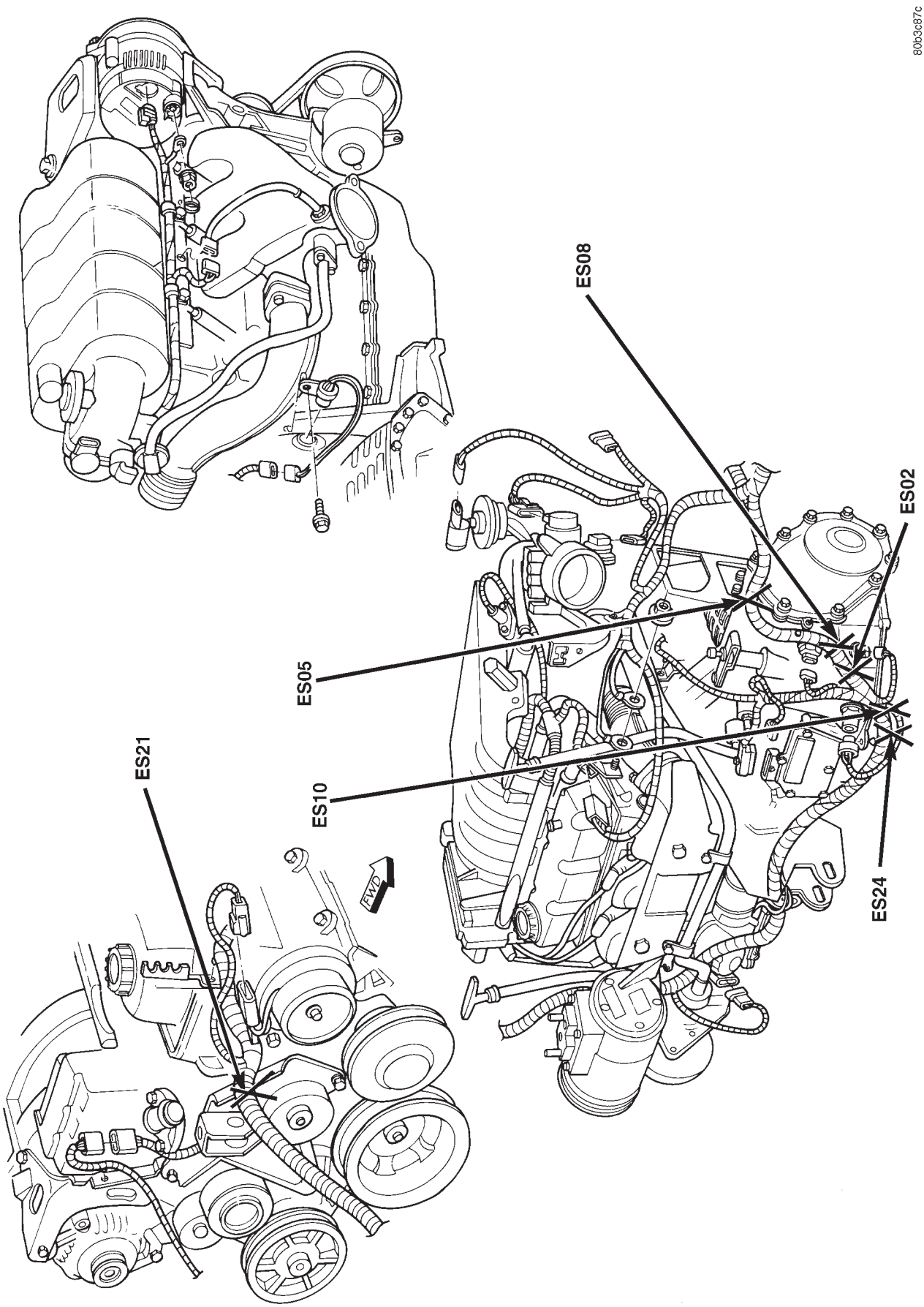

Fig. 6 Engine Splices—3.3L, 3.8L, LHD

DESCRIPTION AND OPERATION (Continued)

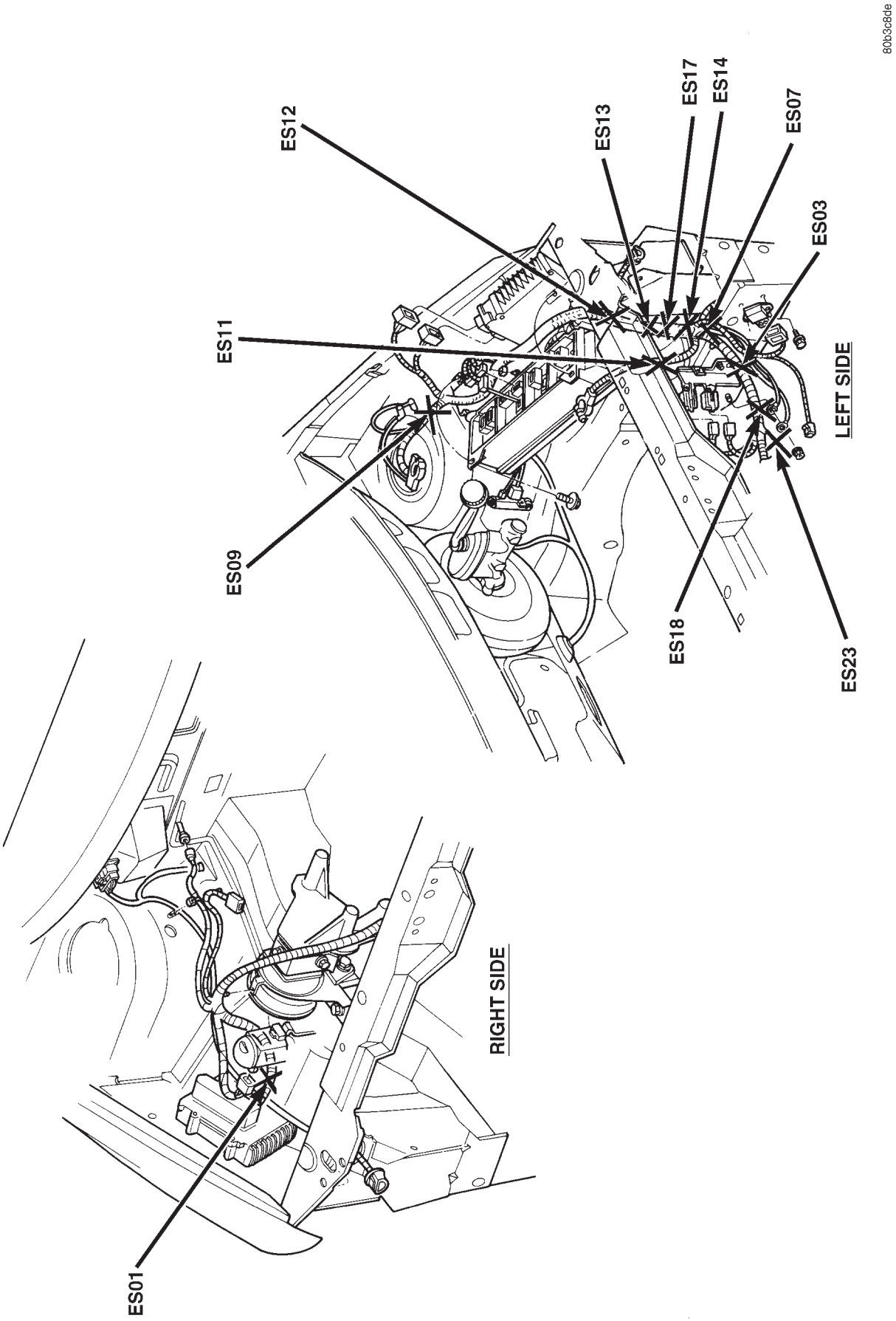

Fig. 7 Engine Compartment Splices—3.3L, 3.8L, LHD

DESCRIPTION AND OPERATION (Continued)

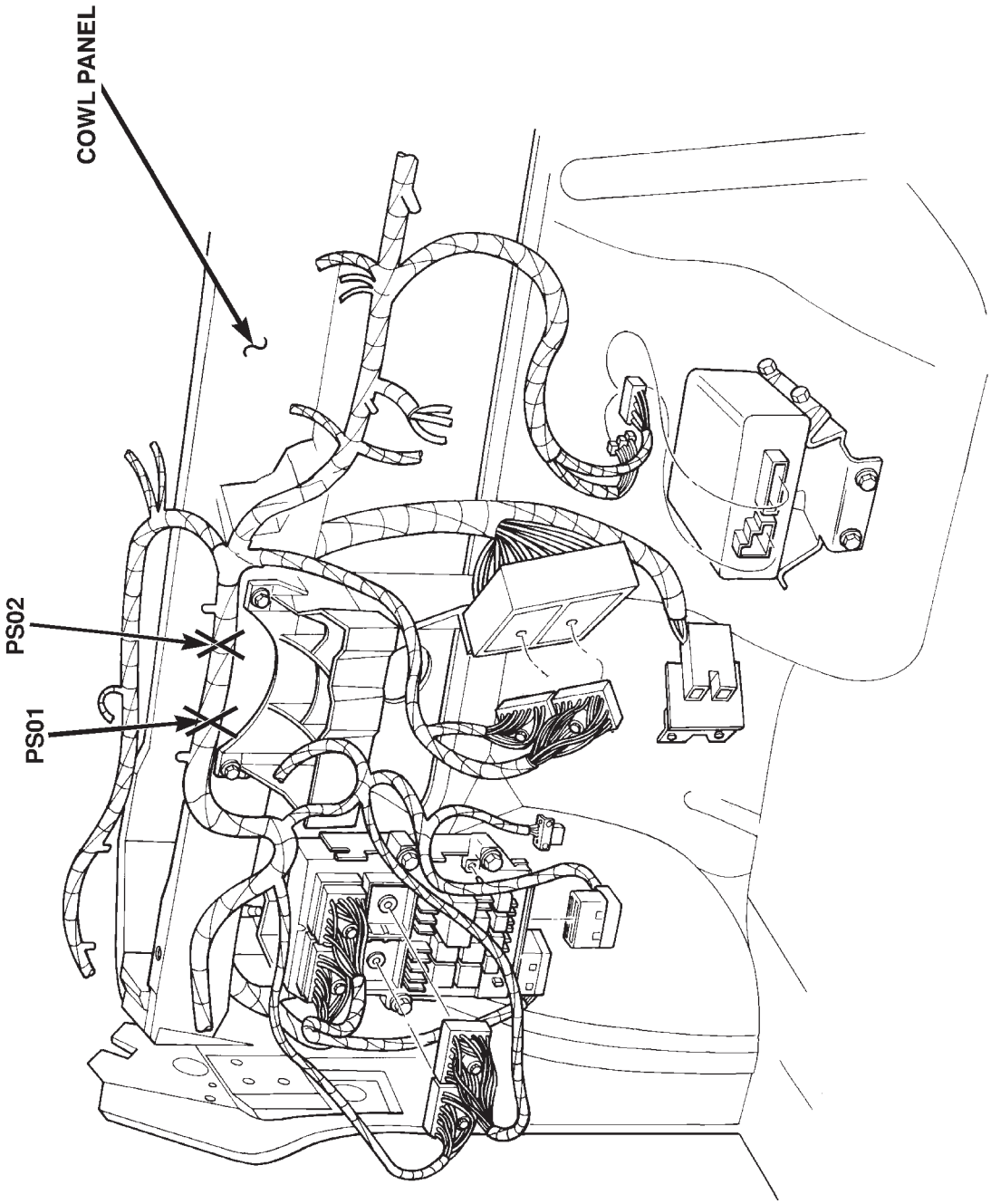

Fig. 8 Instrument Panel Splices—LHD

DESCRIPTION AND OPERATION (Continued)

80b3c8e0

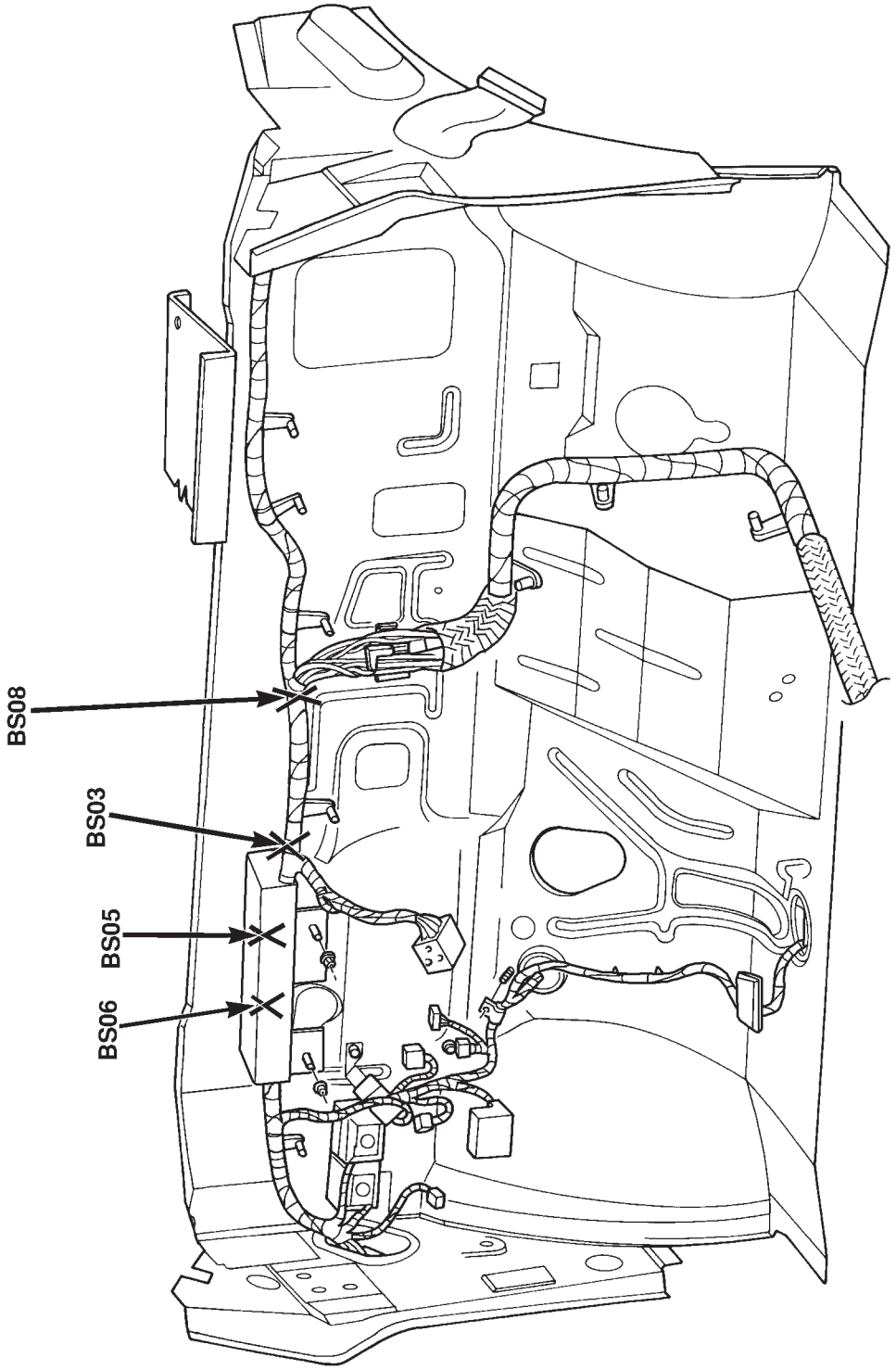

Fig. 9 Cowl Panel Splices—LHD

DESCRIPTION AND OPERATION (Continued)

80697699

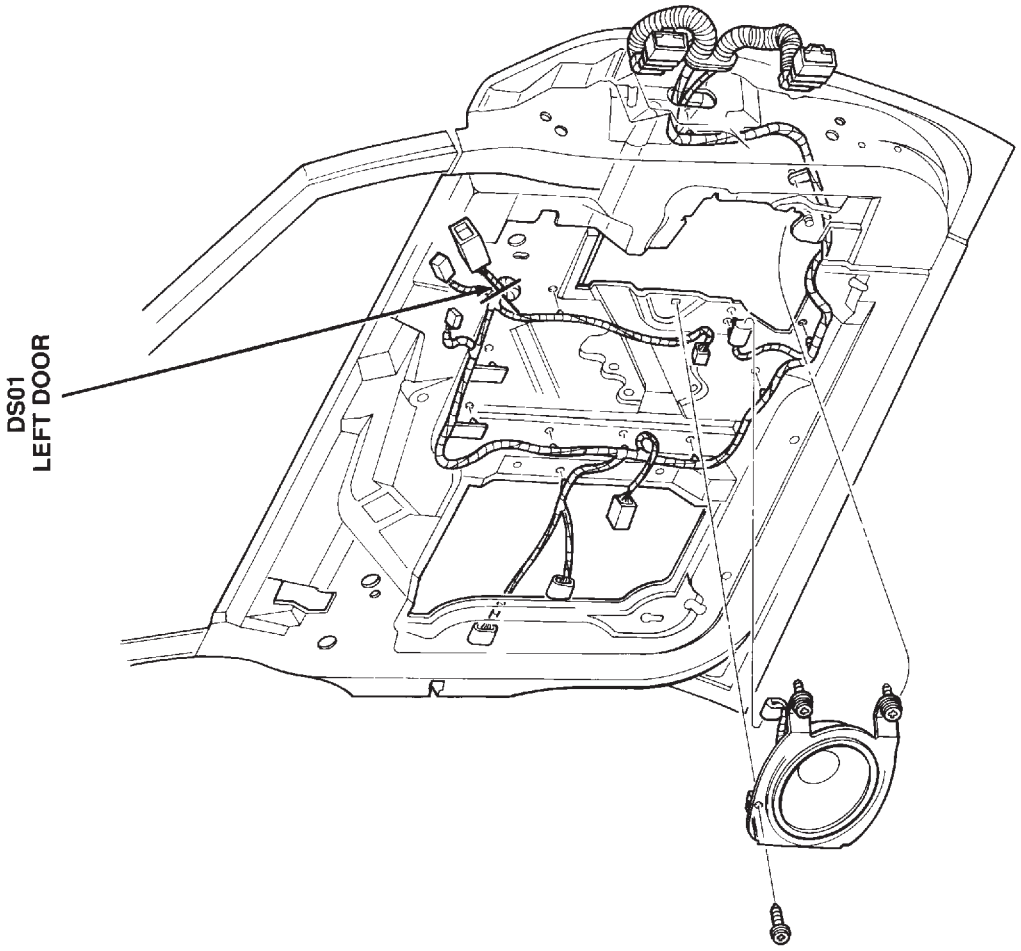

Fig. 10 Left Door Splice—LHD

DESCRIPTION AND OPERATION (Continued)

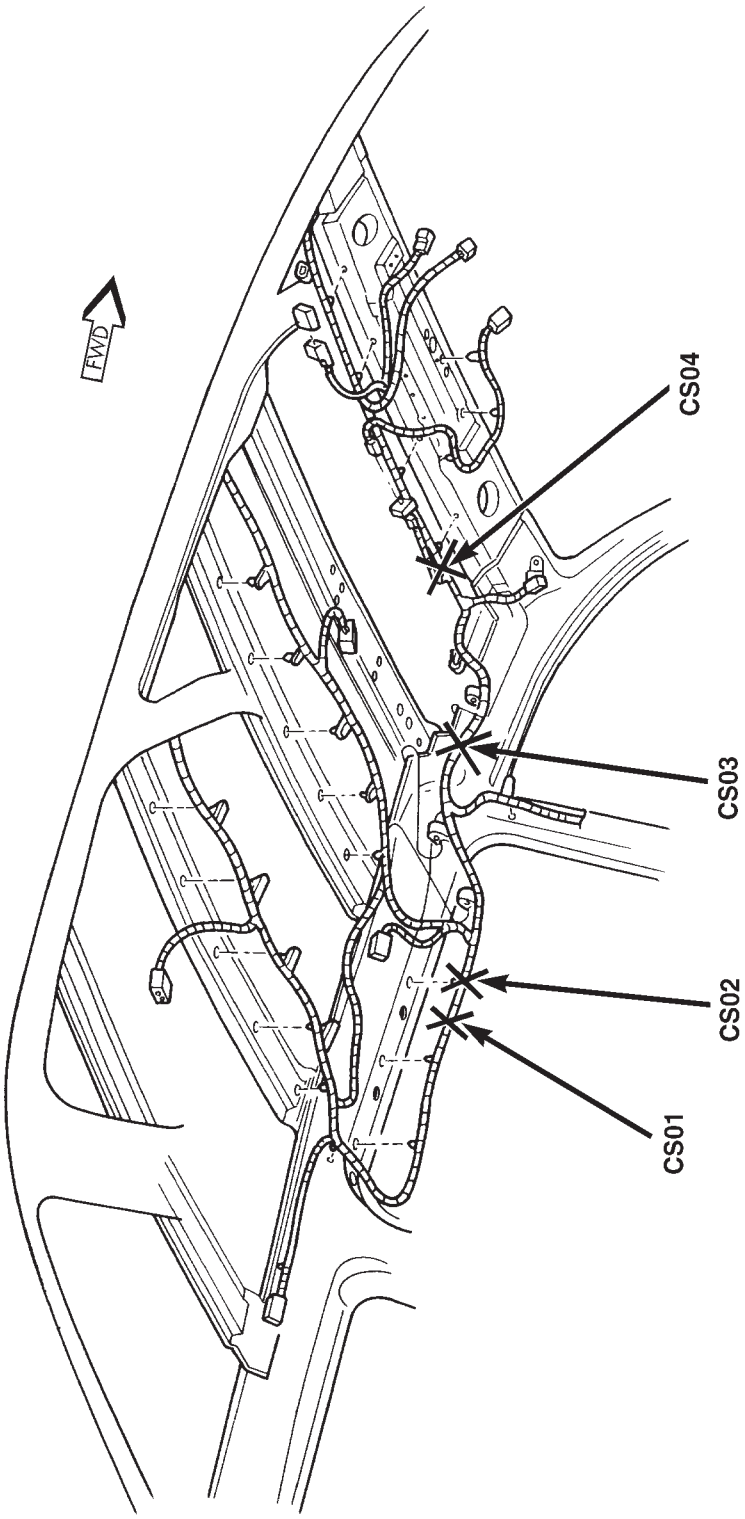

Fig. 11 Dome Harness Splices—LHD

DESCRIPTION AND OPERATION (Continued)

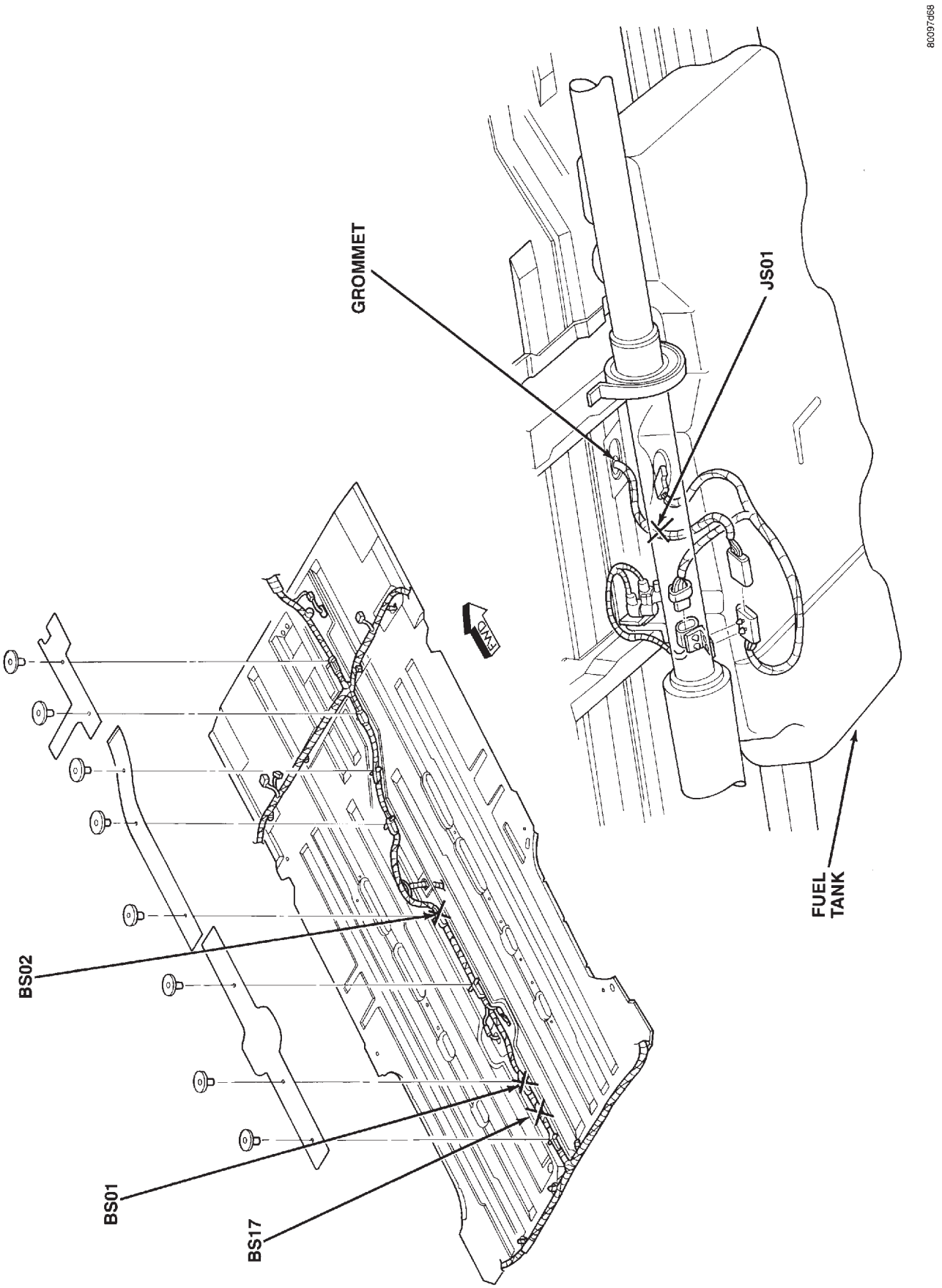

Fig. 12 Floor Pan and Underbody Splices—LHD

DESCRIPTION AND OPERATION (Continued)

SPLICE LOCATIONS (RHD)

Splice Number	Location	Fig.
BS01	Near Split for Tail Lamps	11
BS02	Near Fuel Tank T/O	11
BS03	Near I/P Bulkhead Connector T/O	8
BS05	Near Left Door T/O	N/S
BS06	Near Left Door T/O	N/S
BS08	Near Clutch Interlock switch T/O	8
BS16	Near RT Park Lamp T/O	1
BS17	Near Split for Tail Lamps	11
BS31	Near Left Headlamp Leveling Motor T/O	1
CS01	Above Right Rear Door	10
CS02	Above Right Rear Door	10
CS03	Right B-Pillar	10
CS04	Right B-Pillar	10
DS01	Near LT Power WDO T/O	9
ES01	In TCM T/O	6
ES02 (2.0L)	Near Camshaft Position Sensor T/O	3
ES02 (2.4L)	In Throttle Body T/O	4
ES02 (3.3L, 3.8L)	Near Transmission T/O	5
ES03 (2.0L)	Near Distributor Coil T/O	2
ES03 (2.4L)	Near PDC T/O	4
ES03 (3.3L, 3.8L)	Near Body Ground T/O	6
ES05 (2.4L)	Near Knock Sensor T/O	4
ES05 (3.3L, 3.8L)	Near Transmission T/O	5
ES06	Near Transmission T/O	N/S
ES07 (2.0L)	Near Engine Ground T/O	2
ES07 (2.4L)	Near Body Ground T/O	4
ES07 (3.3L, 3.8L)	Near Battery Negative Terminal T/O	6
ES08 (2.4L)	Near Transmission T/O	4,6
ES09 (2.0L)	Near Battery Positive Terminal	N/S
ES09 (2.4L)	Near Battery Positive Terminal	4
ES09 (3.3L, 3.8L)	Near Battery Positive Terminal	6
ES10 (2.4L)	Near Knock Sensor T/O	6
ES10 (3.3L, 3.8L)	Near Transmission T/O	5
ES11 (2.0L)	Near Battery Positive Terminal	N/S
ES11 (2.4L)	Near Battery Negative Terminal T/O	4
ES11 (3.3L, 3.8L)	Near Battery Negative Terminal	5,6
ES12 (2.0L)	Near Engine Ground T/O	2
ES12 (2.4L)	Near Throttle Body T/O	4
ES12 (3.3L, 3.8L)	Near Battery Positive Terminal T/O	6
ES13 (2.4L)	Near Generator T/O	4
ES13 (3.3L, 3.8L)	Near Battery Negative Terminal	4
ES14 (2.4L)	Near Generator Field T/O	4
ES14 (3.3L, 3.8L)	Near Battery Negative Terminal	4
ES17 (2.0L)	Near Camshaft Position Sensor T/O	3
ES17 (2.4L)	Near Engine Ground T/O	4
ES17 (3.3L, 3,8L)	Near Battery Negative Terminal	4
ES18 (2.0L)	Near Camshaft Position Sensor T/O	3
ES18 (2.4L)	Near Engine Ground T/O	4
ES18 (3.3L, 3.8L)	Near Engine Ground T/O	6
ES21 (2.0L)	Near Body Ground T/O	N/S
ES21 (2.4L)	Near Back Up Lamp Switch T/O	4
ES21 (3.3L, 3.8L)	Near A/C Clutch T/O	5
ES23 (2.0L)	Near Radiator Fan T/O	N/S
ES23 (2.4L)	Near Radiator Fan T/O	4
ES23 (3.3L, 3.8L)	Near Body Ground T/O	6
ES24	Near Transmission T/O	4,6
ES24 (3.3L, 3.8L)	Near Transmission T/O	5
ES99 (2.0L)	Near Knock Sensor T/O	2
FS01 (2.4L)	Near ECT Sensor T/O	N/S
FS01 (3.3L, 3.8L)	Near Injector #5 T/O	N/S
FS02 (2.4L)	Near Inj #2 T/O	N/S
FS02 (3.3L, 3.8L)	Between Inj's 4 and 6	N/S
FS03 (2.4L)	Between Inj #2 and #3	N/S
PS01	Near Steering Column T/O	7
PS02	Near Steering Column T/O	7
RFS01	Near Radiator Fan #2	N/S
RFS02	Near Radiator Fan #1	N/S

DESCRIPTION AND OPERATION (Continued)

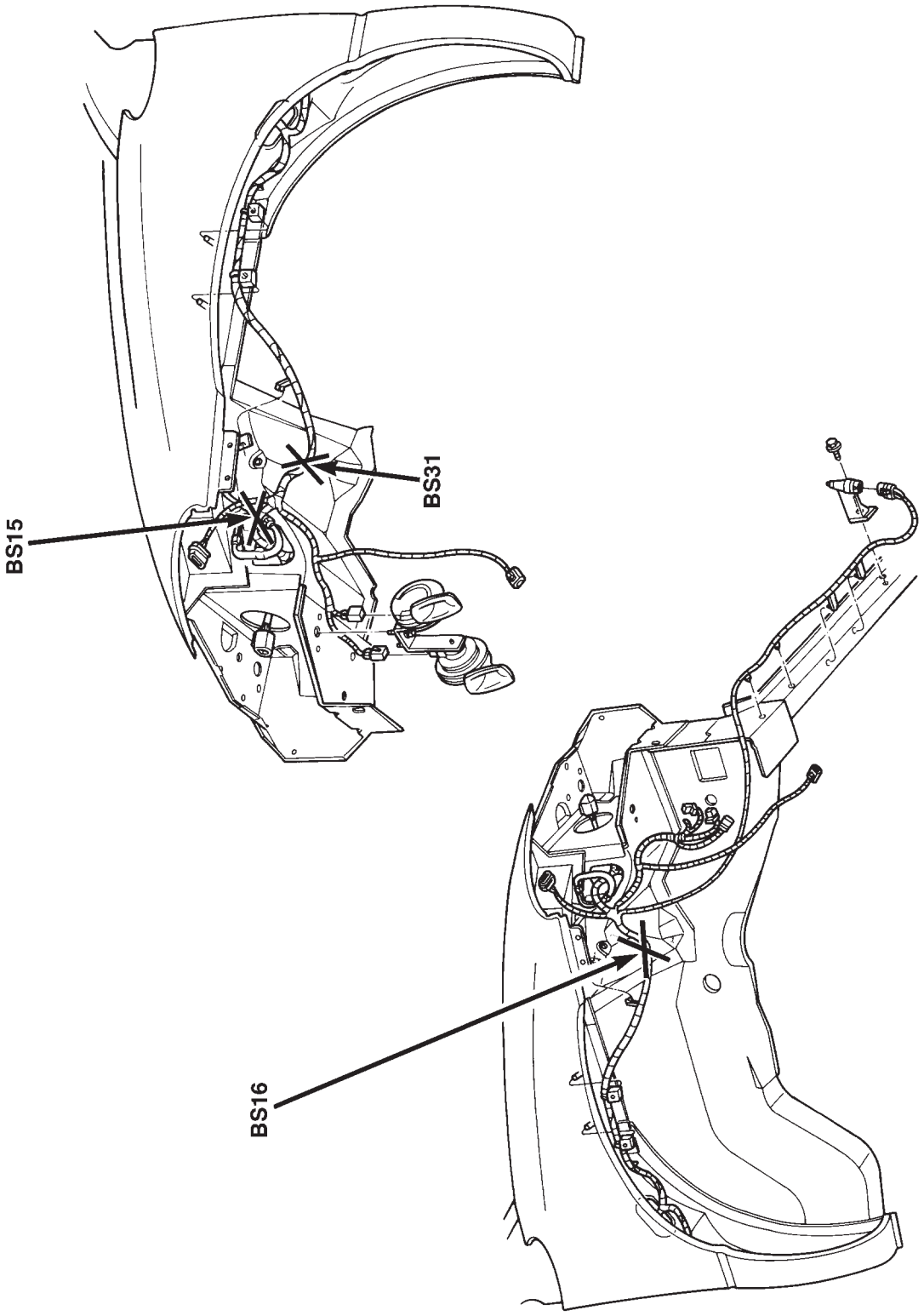

Fig. 1 Front End Splices—RHD

DESCRIPTION AND OPERATION (Continued)

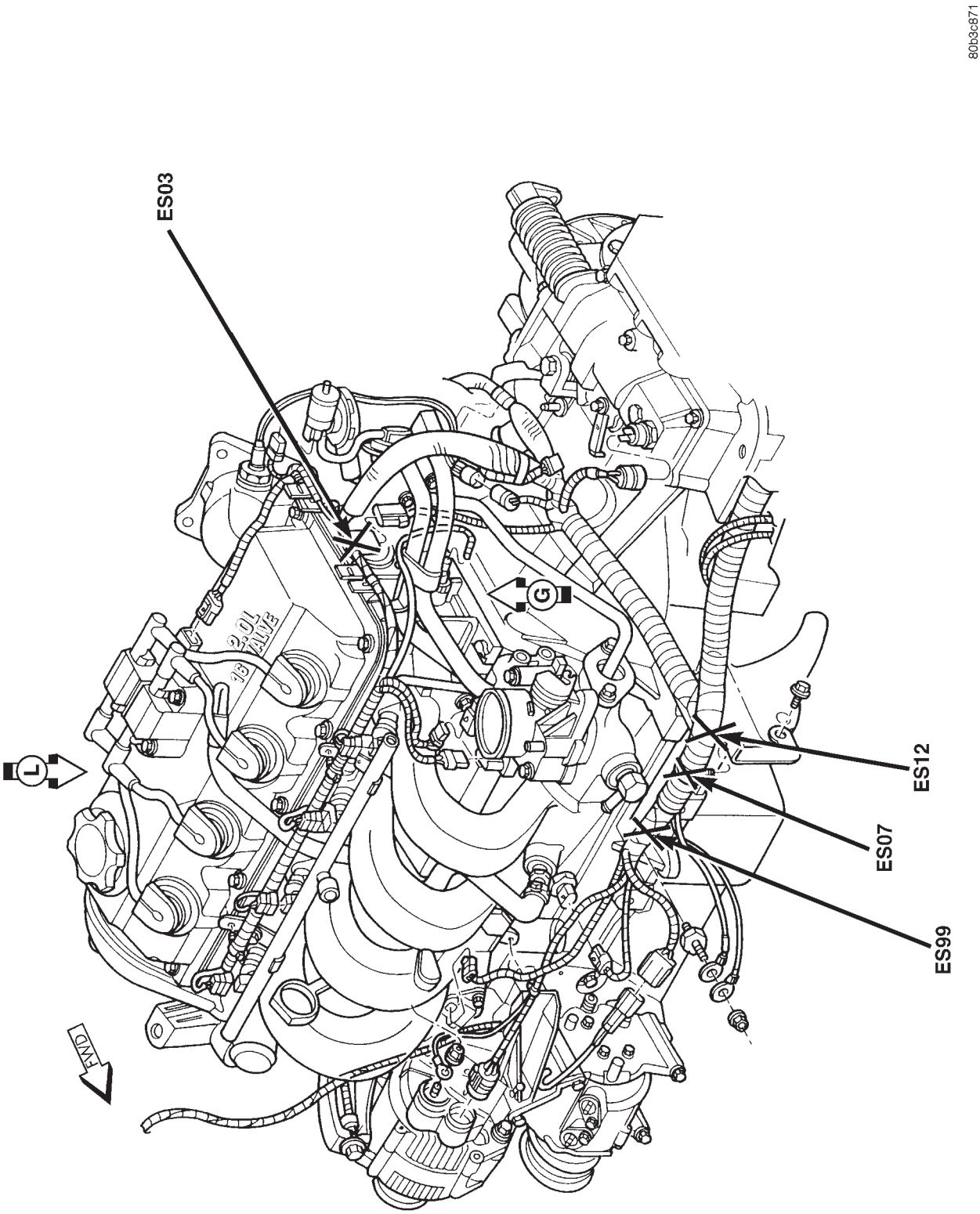

Fig. 2 Engine Splices—2.0L, RHD

DESCRIPTION AND OPERATION (Continued)

80b3c872

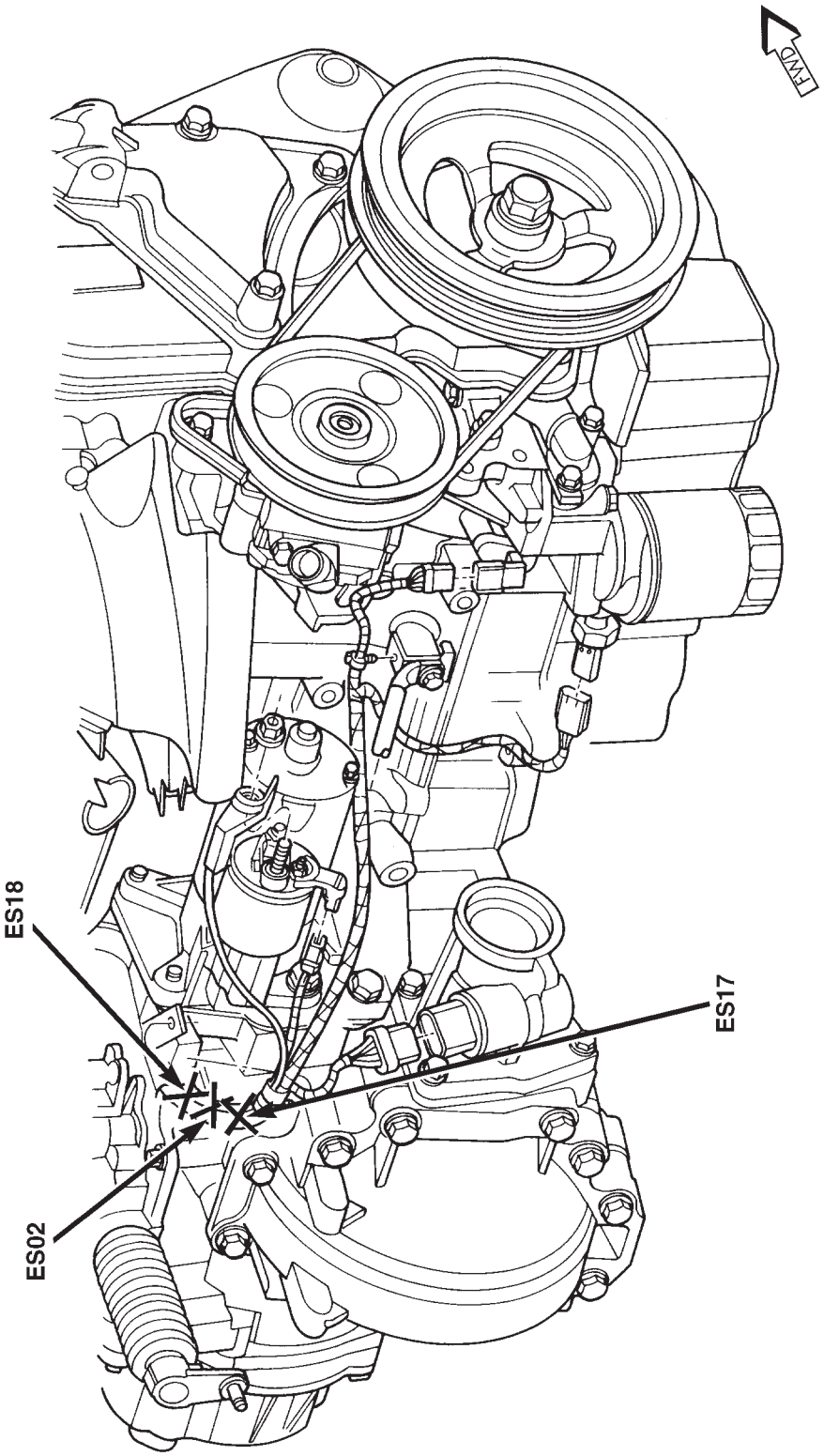

Fig. 3 Engine Splices—2.0L, RHD

DESCRIPTION AND OPERATION (Continued)

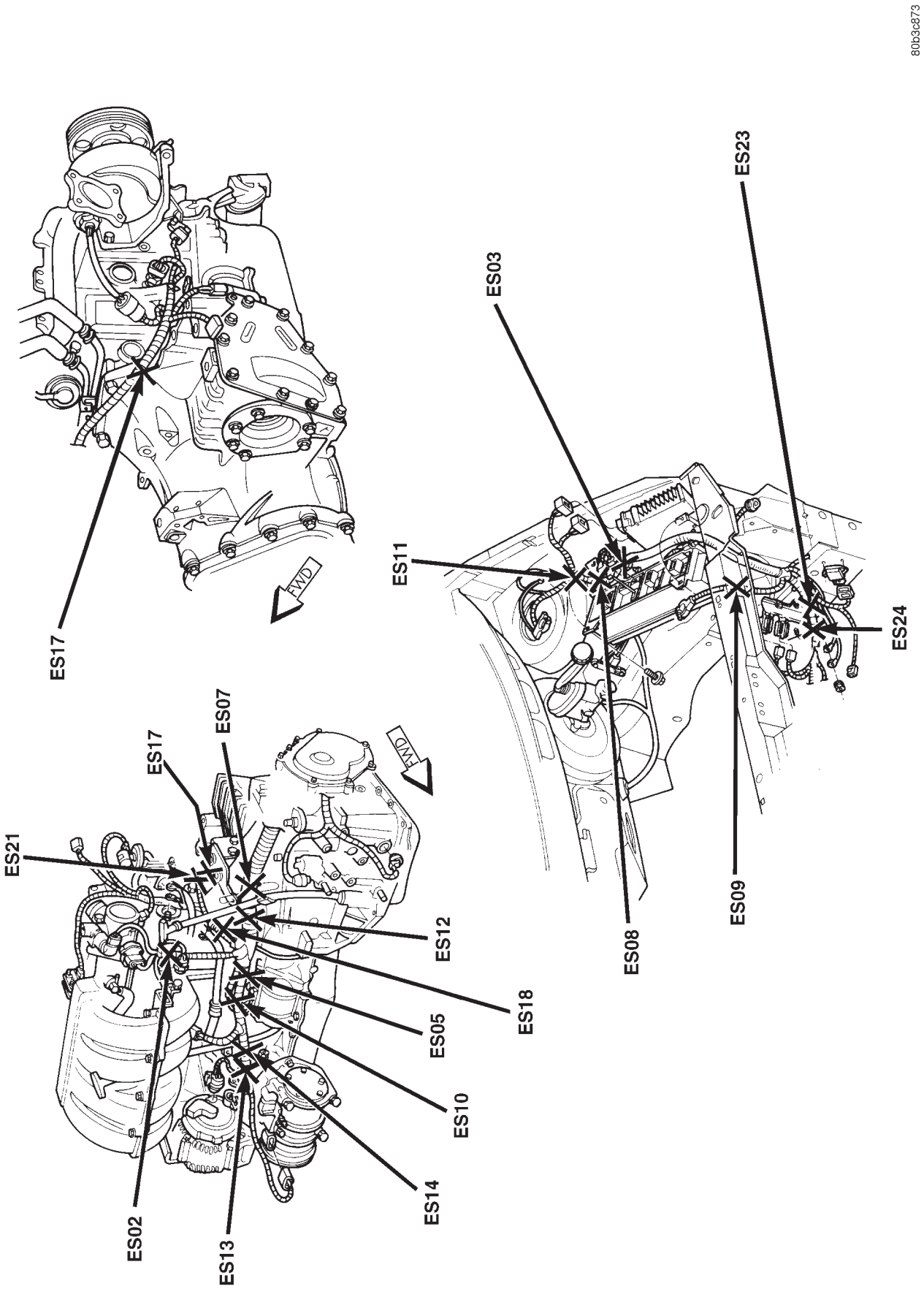

Fig. 4 Engine Splices—2.4L, RHD

DESCRIPTION AND OPERATION (Continued)

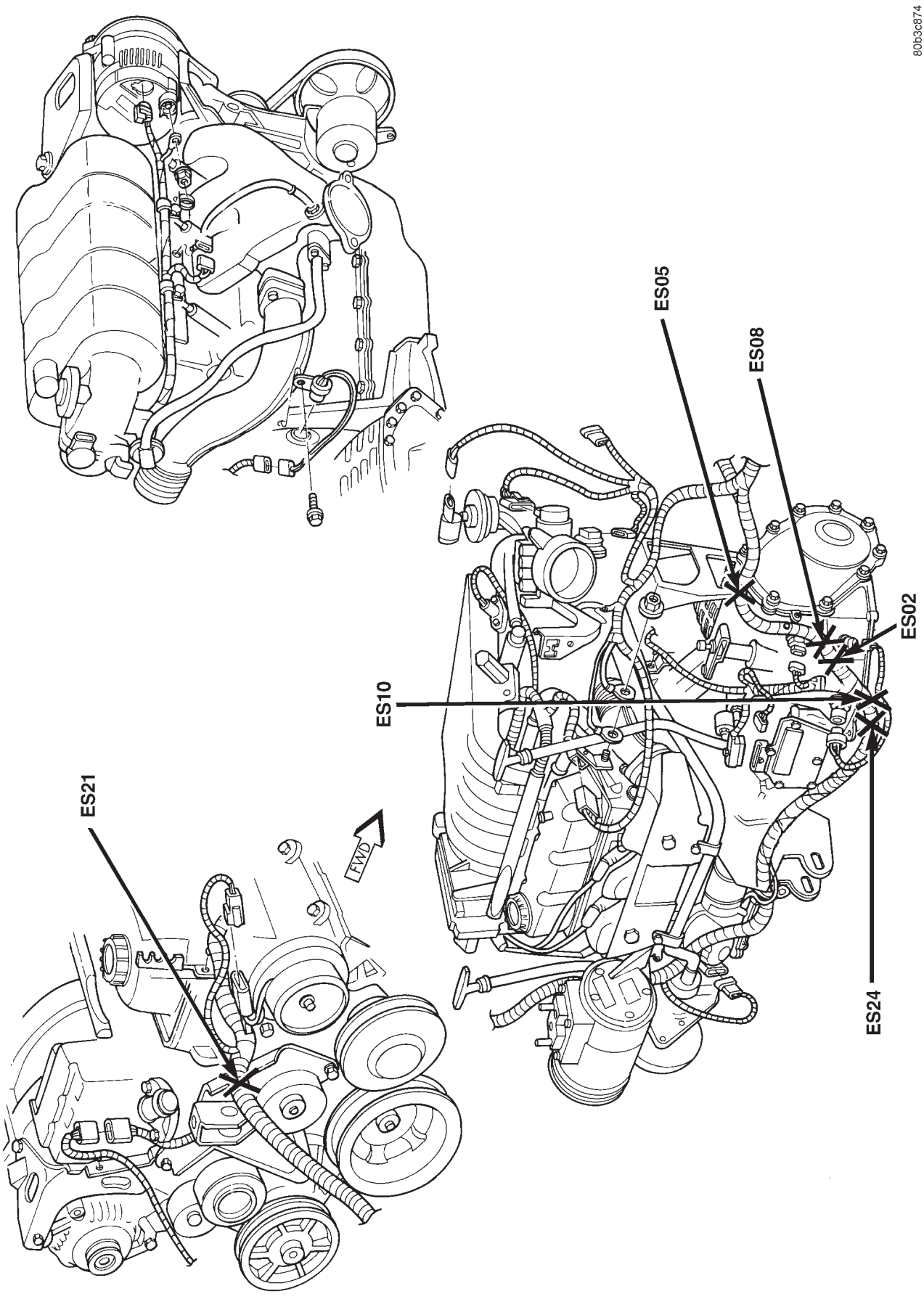

Fig. 5 Engine Splices—3.3L, 3.8L, RHD

DESCRIPTION AND OPERATION (Continued)

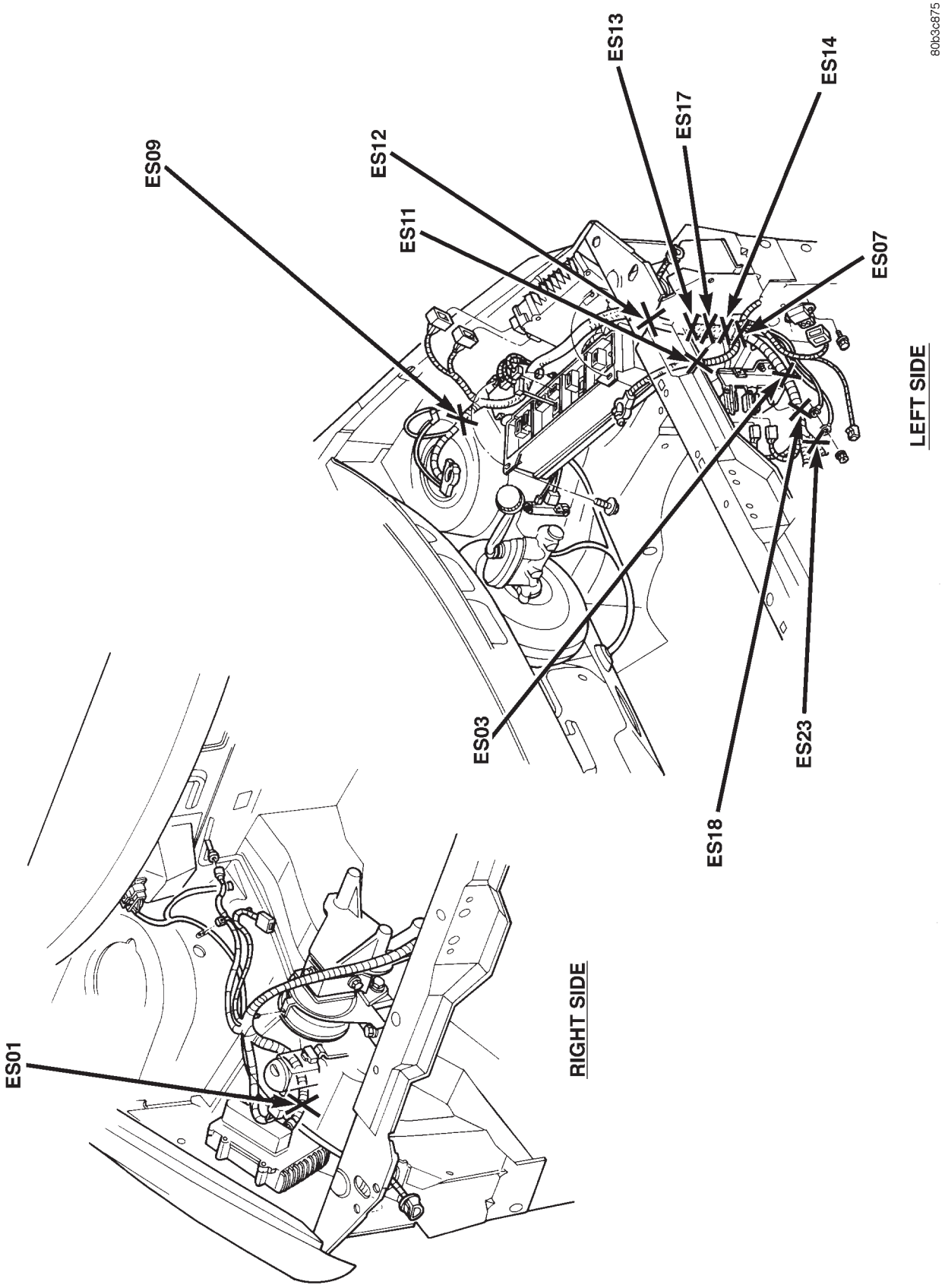

Fig. 6 Engine Compartment Splices—3.3L, 3.8L, RHD

DESCRIPTION AND OPERATION (Continued)

80b3c876

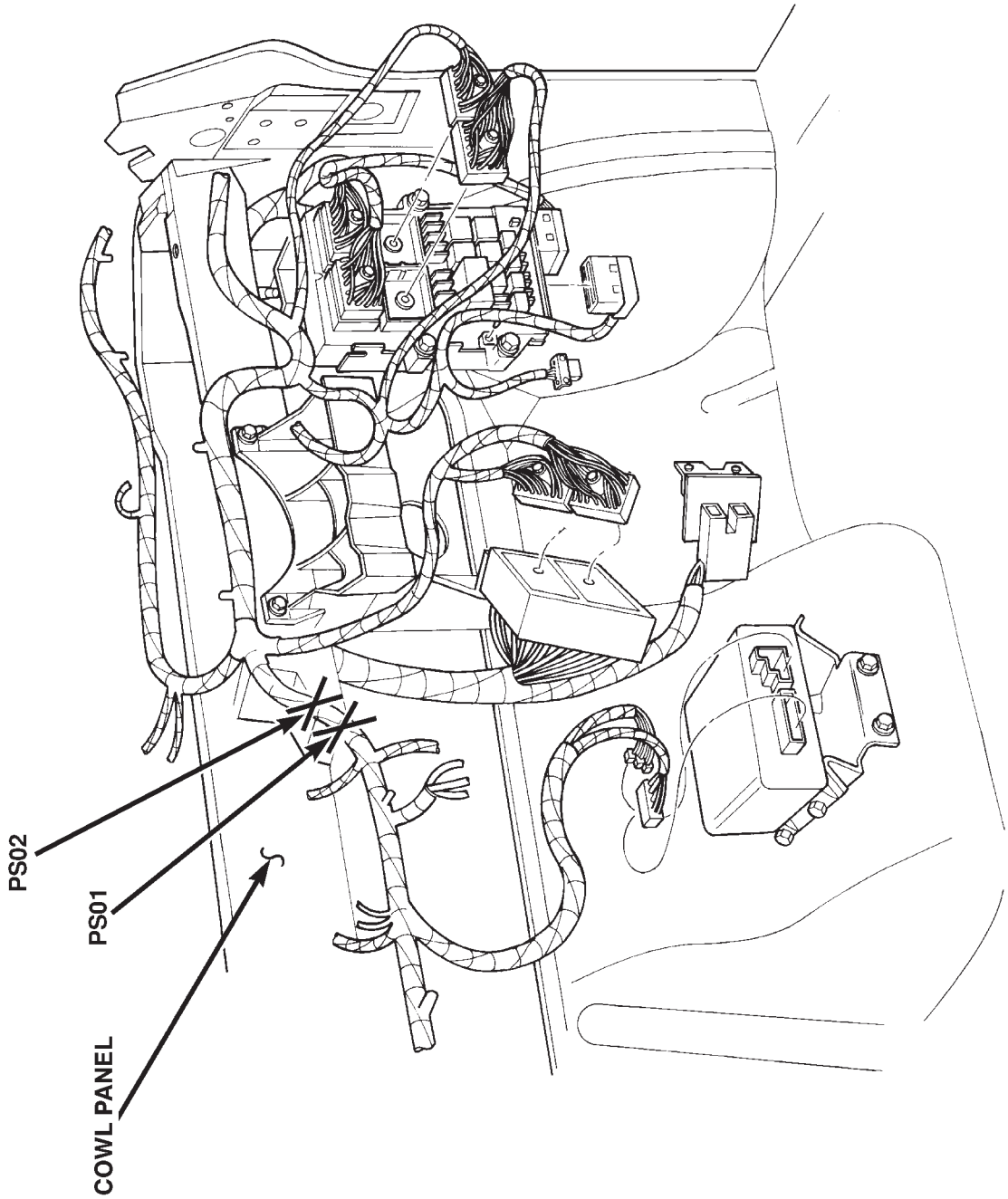

Fig. 7 Instrument Panel Splices—RHD

DESCRIPTION AND OPERATION (Continued)

80b3c877

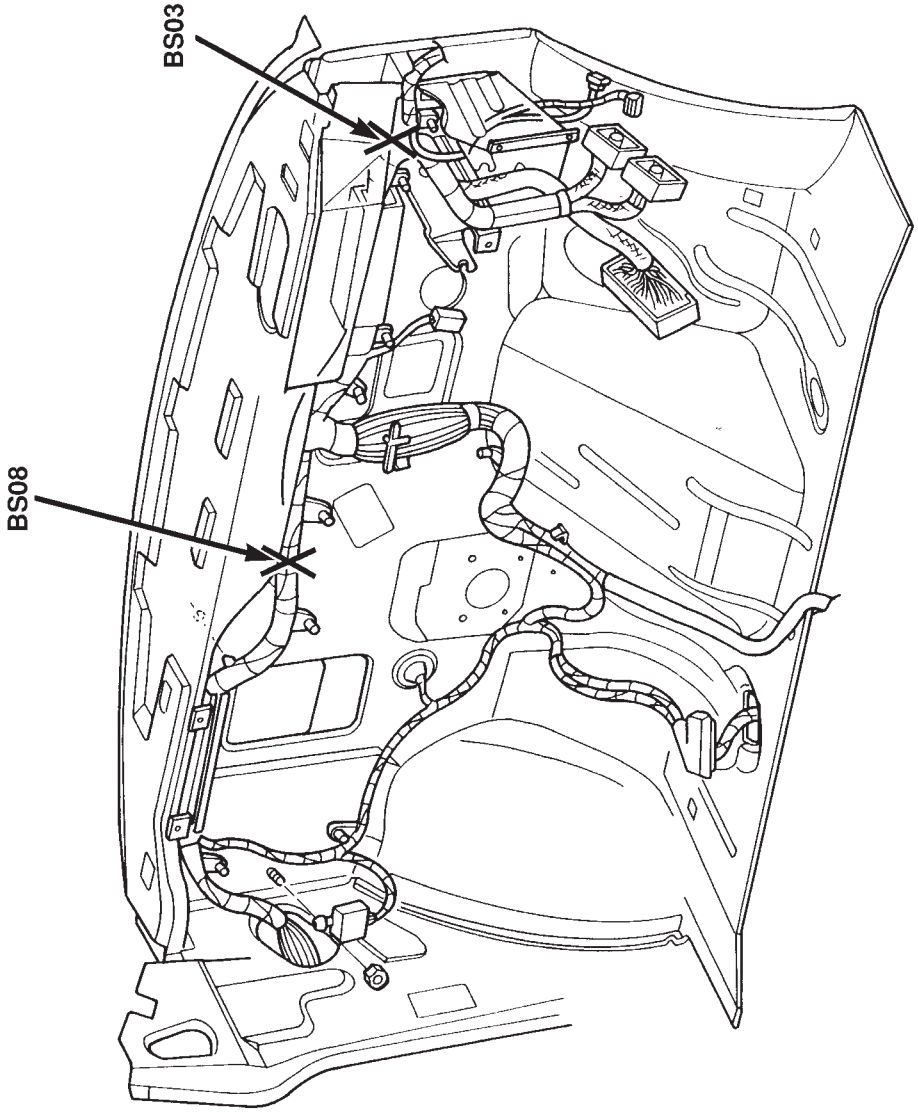

Fig. 8 Cowl Panel Splices—RHD

DESCRIPTION AND OPERATION (Continued)

80697466

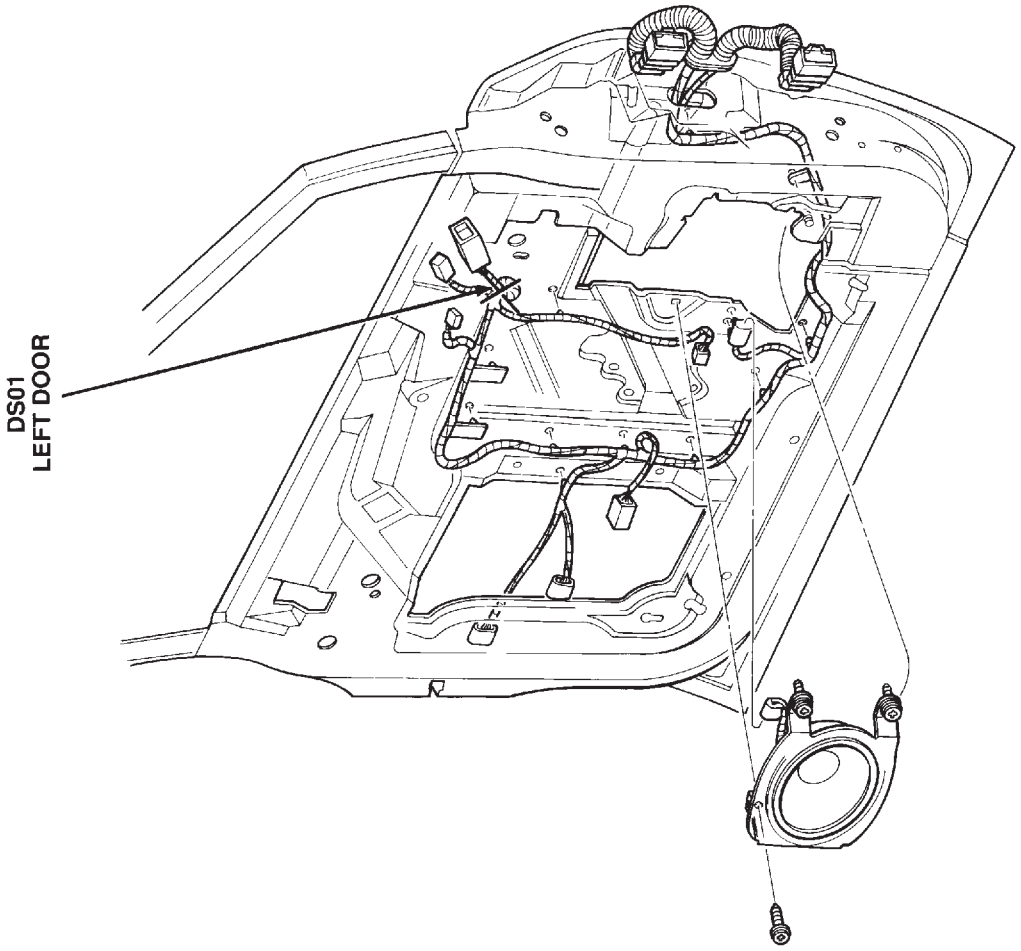

Fig. 9 Left Door Splice—RHD

DESCRIPTION AND OPERATION (Continued)

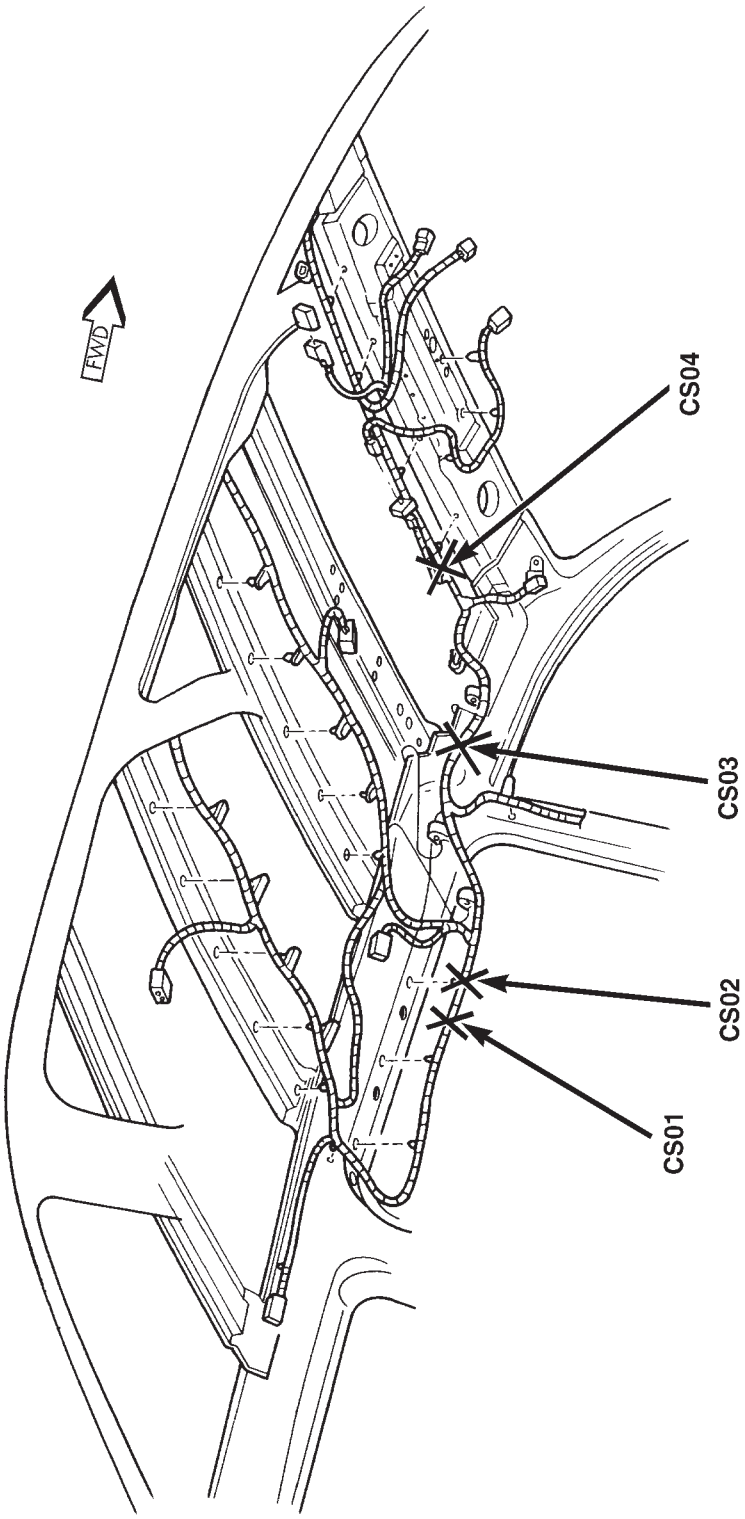

Fig. 10 Dome Harness Splices—RHD

DESCRIPTION AND OPERATION (Continued)

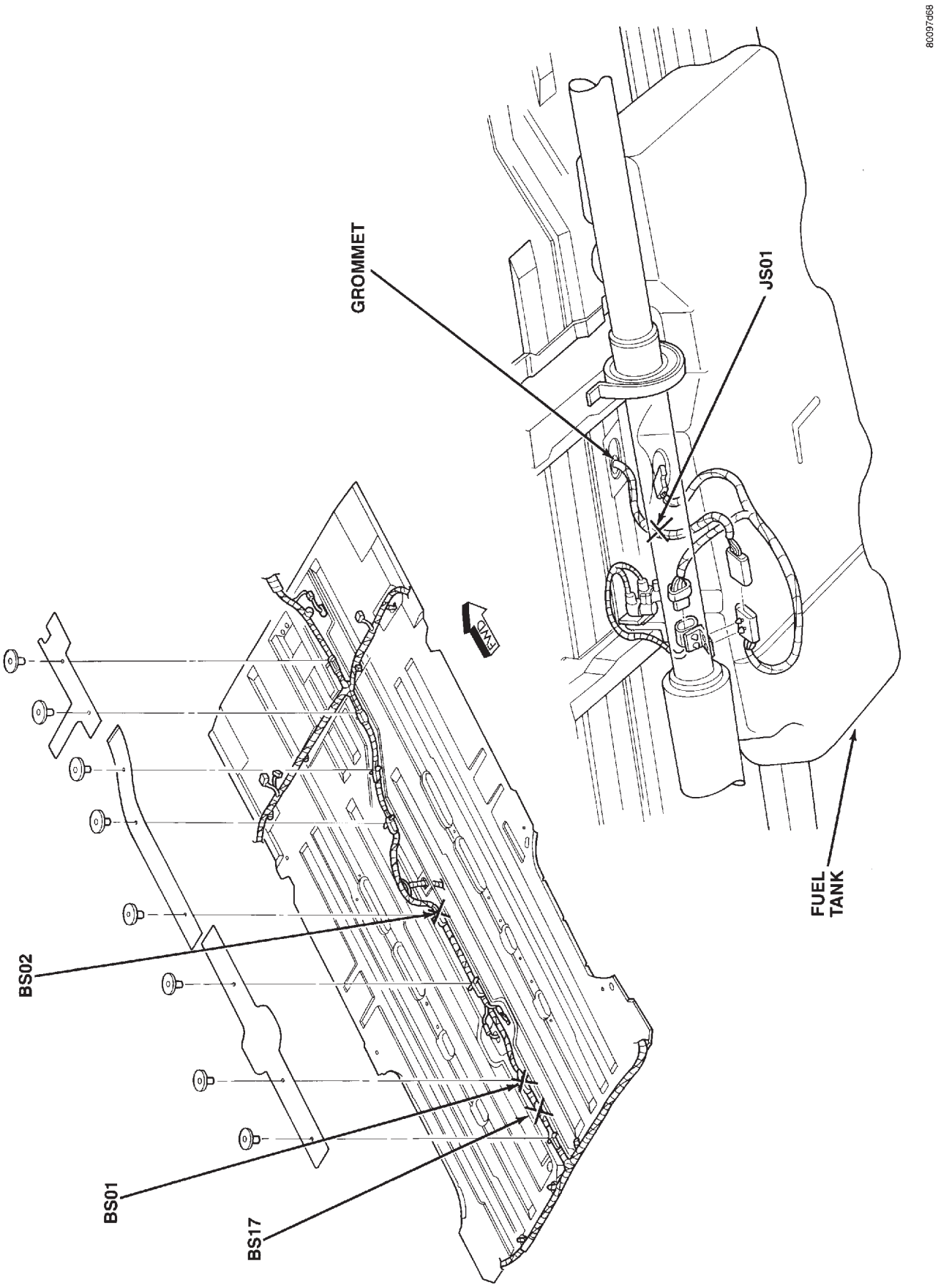

Fig. 11 Floor Pan and Underbody Splices—RHD